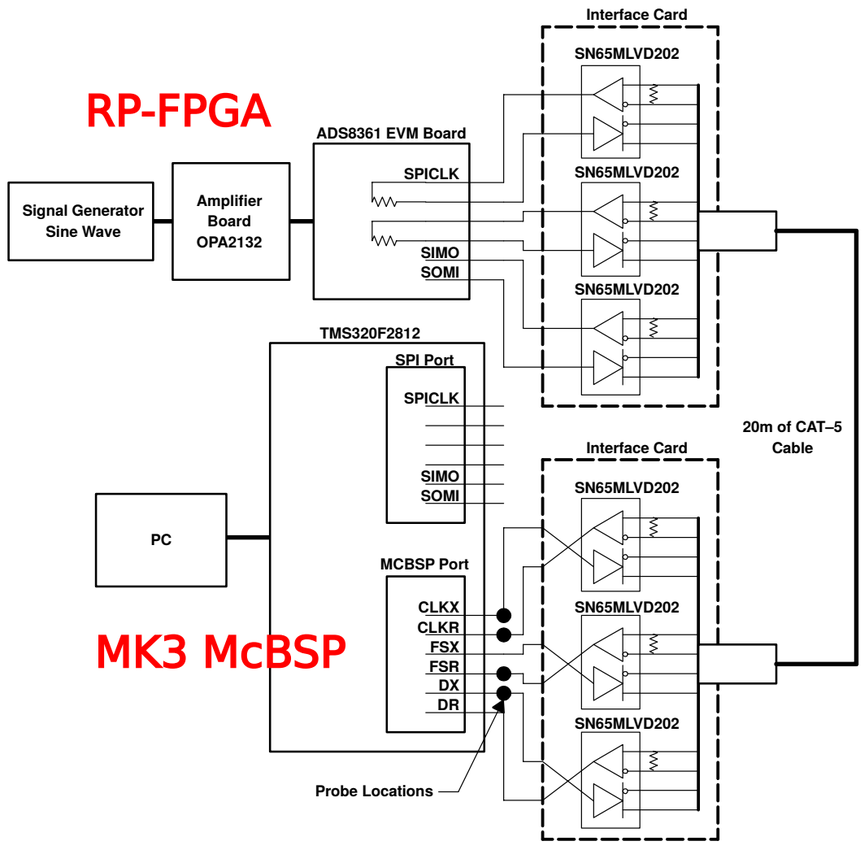
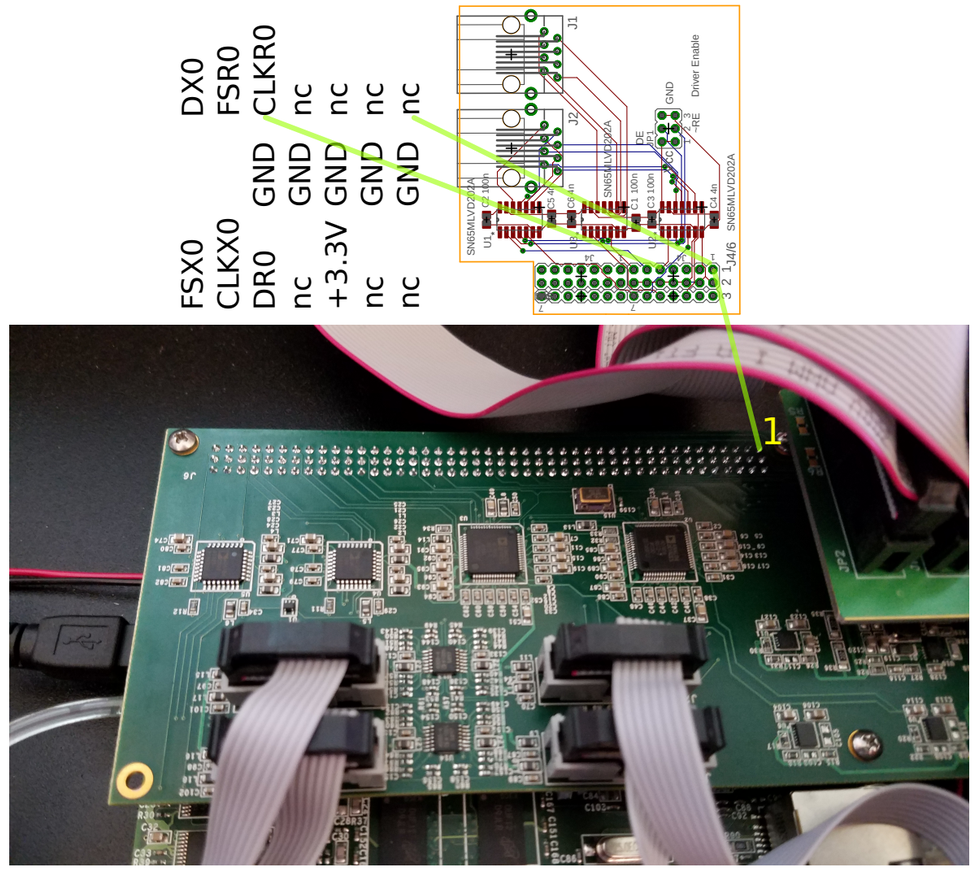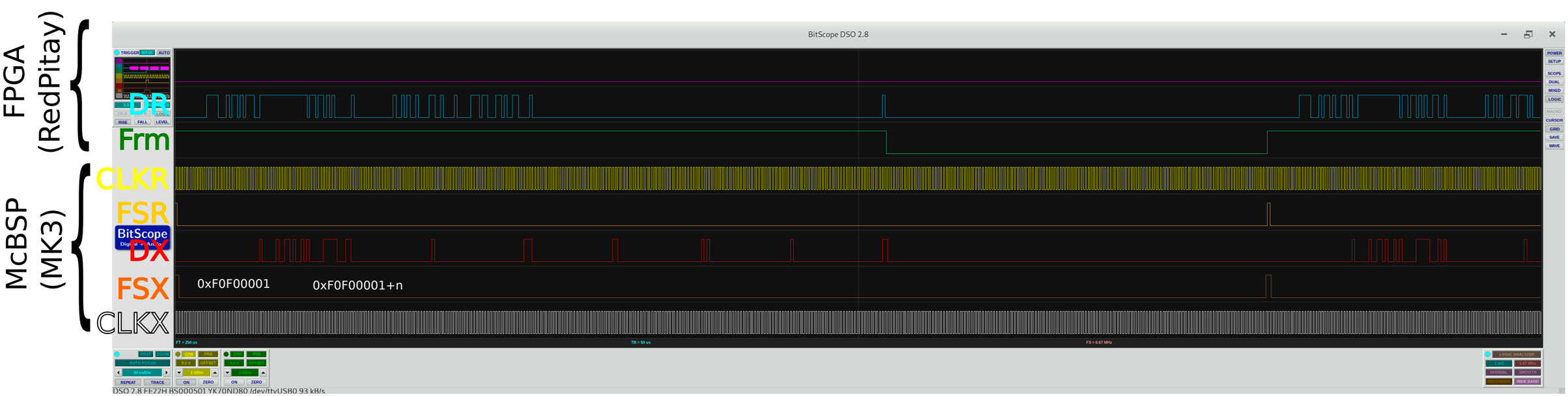
Figure 9. Extension of the TMS320F2812 McBSP Interface With M-LVDS