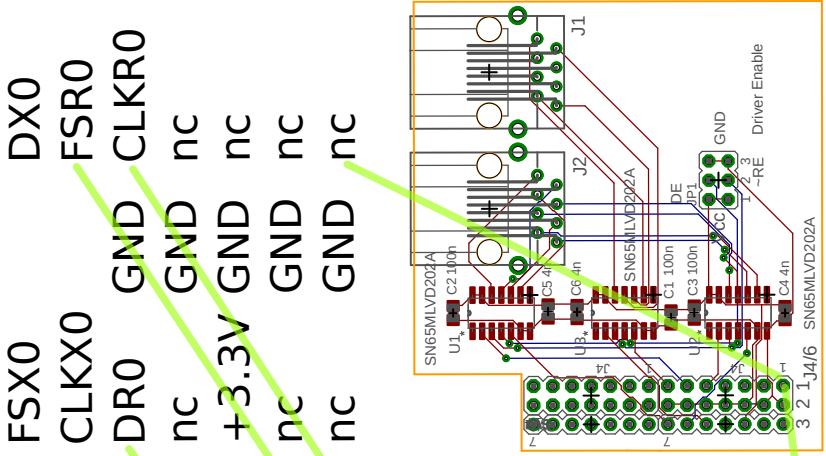

Must disconnect the three shown pins between MK3 J4 and A810 J6:

CLKR0,
FSR0,
DR0
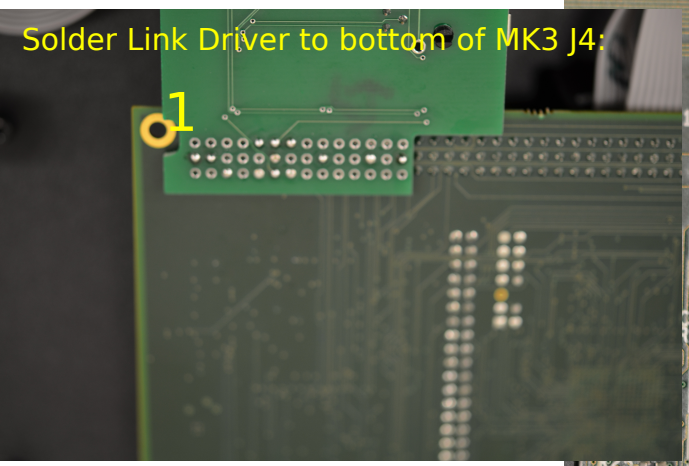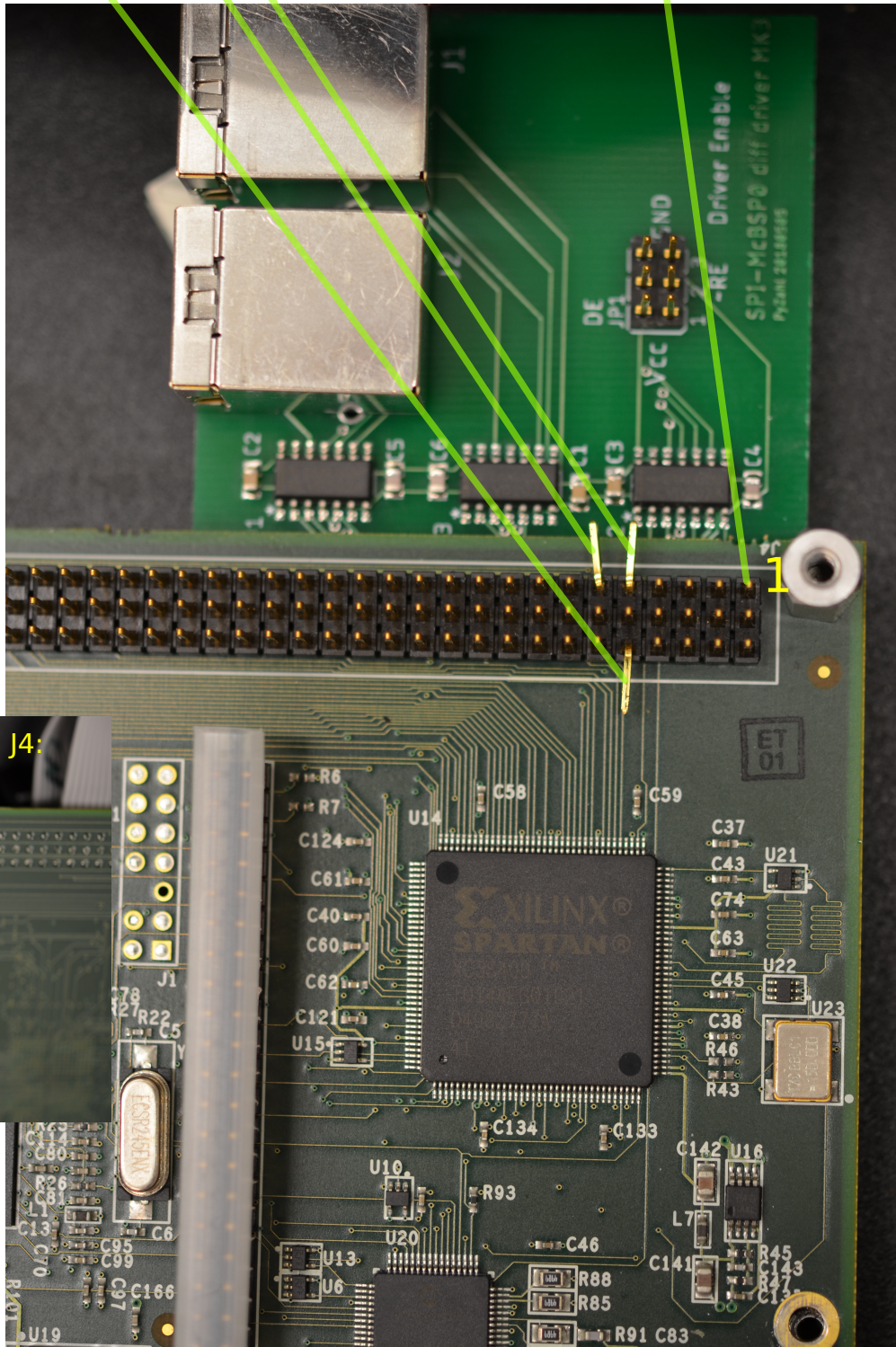
Simply bending them sideways does the trick!