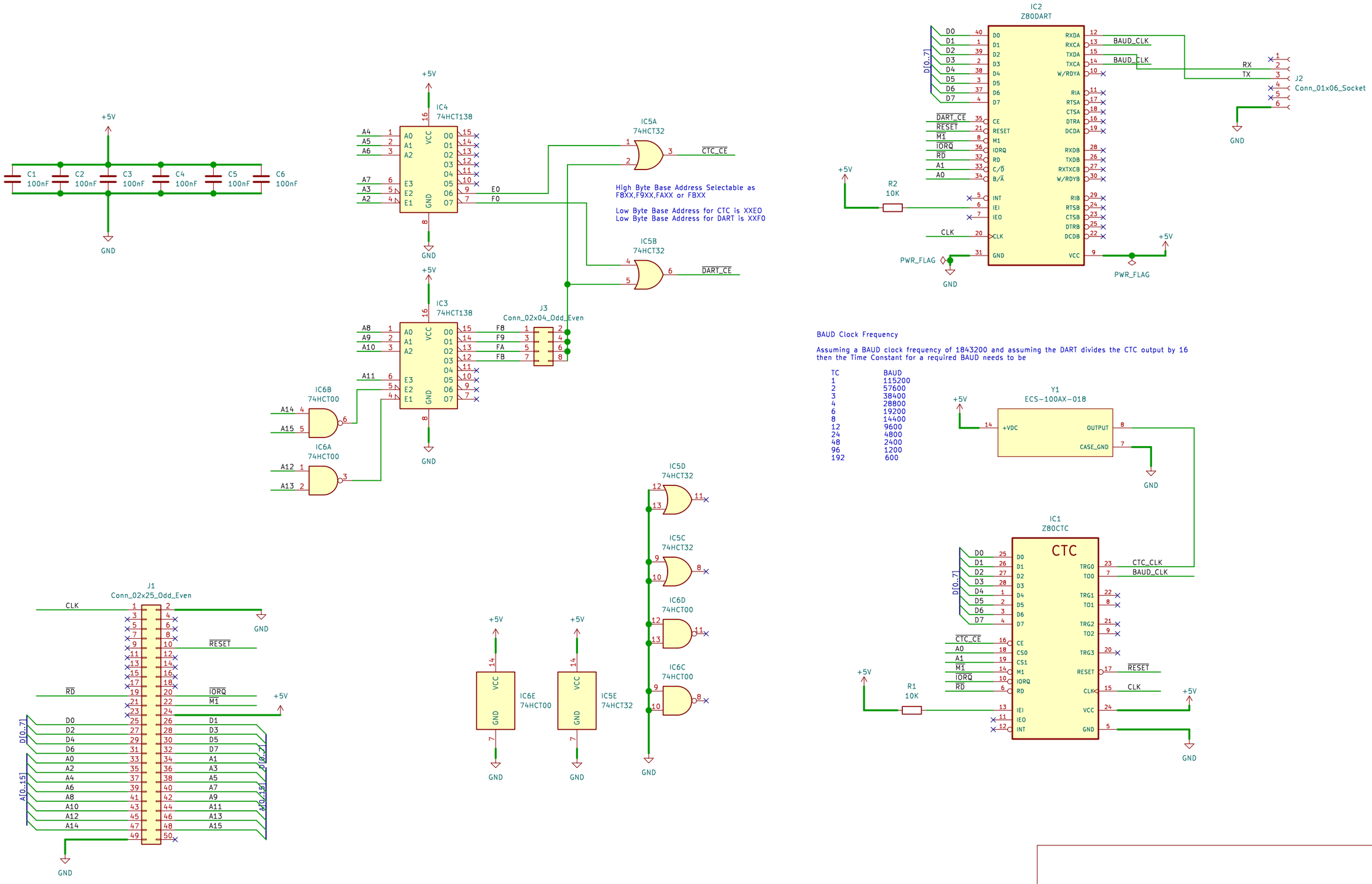

https://github.com/rabs664/Amstrad-CPC-CTC-DART

Sheet: /

File: Amstrad-CPC-Z80-CTC-DART.kicad_sch

Title: RABS664 Amstrad CPC CTC DART

Size: A3	Date: 2023-08-12	Rev: 1.0
KiCad E.D.A. eeschema 7.0.5		Id: 1/1