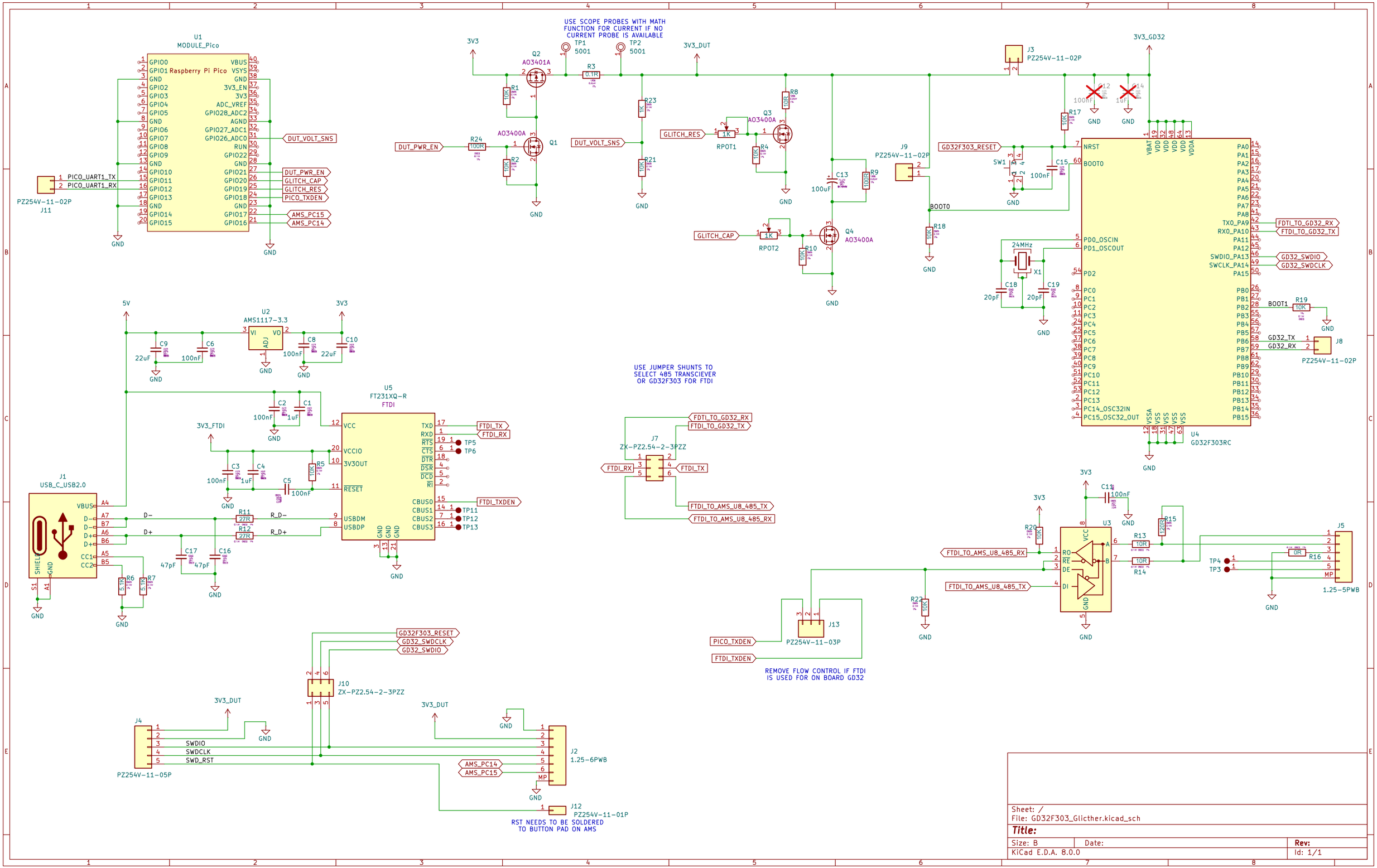
USE SCOPE PROBES WITH MATH FUNCTION FOR CURRENT IF NO CURRENT PROBE IS AVAILABLE
USE JUMPER SHUNTS TO SELECT 485 TRANSCIEVER OR GD32F303 FOR FTDI
REMOVE FLOW CONTROL IF FTDI IS USED FOR ON BOARD GD32
RST NEEDS TO BE SOLDERED TO BUTTON PAD ON AMS
U1 MODULE_Pico
Raspberry Pi Pico
U2 AMS1117-3.3
U5 FT231XQ-R FTDI
U4 GD32F303RC
U3
J1 USB_C_USB2.0
J11 PZ254V-11-02P
J3 PZ254V-11-02P
J9 PZ254V-11-02P
J8 PZ254V-11-02P
J7 ZX-PZ2.54-2-3PZZ
J10 ZX-PZ2.54-2-3PZZ
J4 PZ254V-11-05P
J2 1.25-6PWB
J12 PZ254V-11-01P
J13 PZ254V-11-03P
J5 1.25-5PWB
Q1 AO3400A
Q2 AO3401A
Q3 AO3400A
Q4 AO3400A
RPOT1
RPOT2
X1 24MHz
SW1
TP1 5001
TP2 5001
3V3
3V3_DUT
3V3_GD32
3V3_FTDI
5V
GND
DUT_PWR_EN
DUT_VOLT_SNS
GLITCH_RES
GLITCH_CAP
GD32F303_RESET
BOOT0
BOOT1
PICO_UART1_TX
PICO_UART1_RX
PICO_TXDEN
AMS_PC15
AMS_PC14
FDTI_TO_GD32_RX
FDTI_TO_GD32_TX
GD32_SWDIO
GD32_SWDCLK
GD32_TX
GD32_RX
FTDI_TX
FTDI_RX
FTDI_TXDEN
FTDI_TO_AMS_U8_485_TX
FTDI_TO_AMS_U8_485_RX
PICO_TXDEN
FTDI_TXDEN
SWDIO
SWDCLK
SWD_RST
D-
D+
R_D-
R_D+
Sheet: /
File: GD32F303_Glicther.kicad_sch
Title:
Size: B
Date:
Rev:
KiCad E.D.A. 8.0.0
Id: 1/1