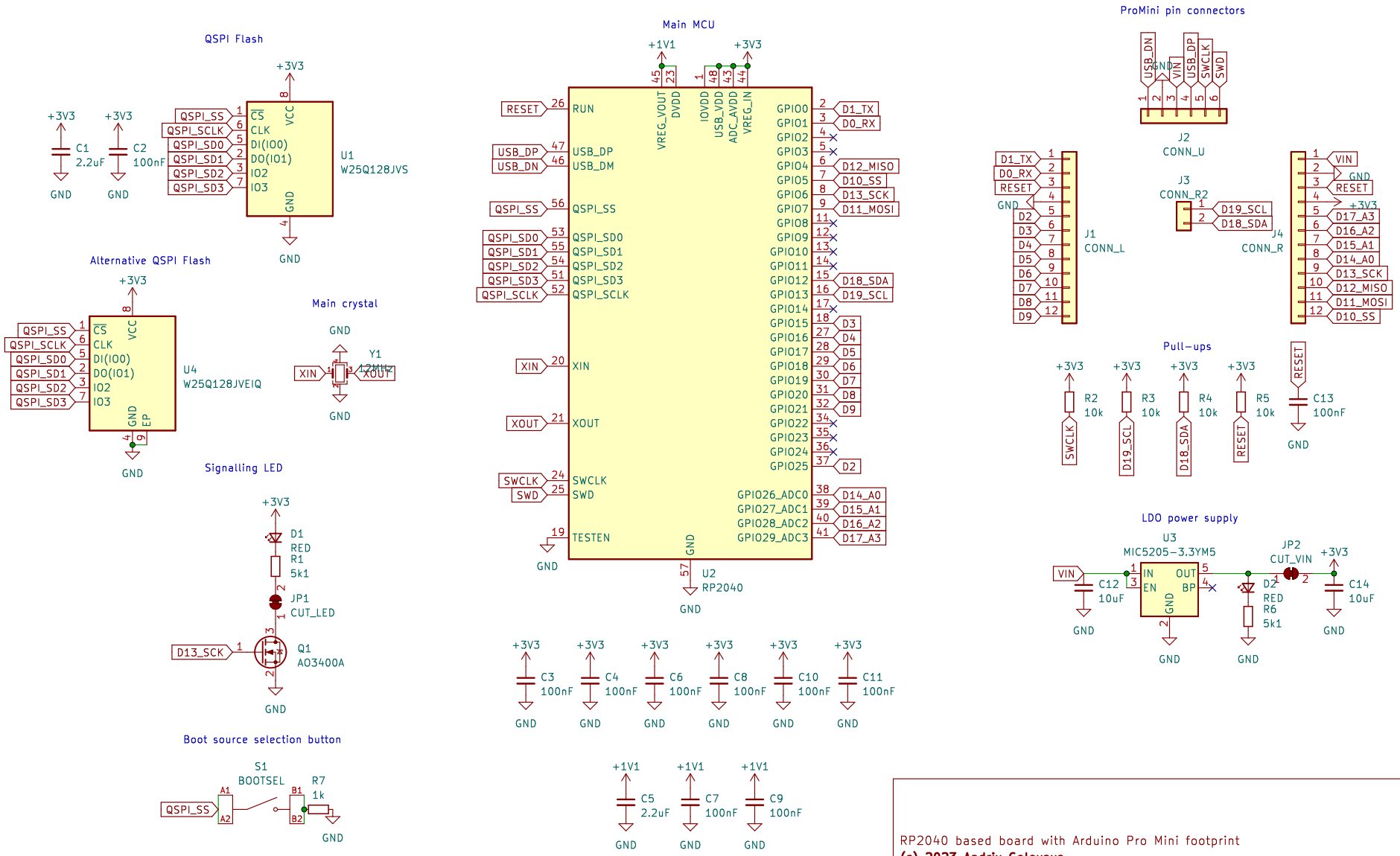

RP2040 based board with Arduino Pro Mini footprint

(c) 2023 Andriy Golovnya

Sheet: /

File: RP2040-ProMini.kicad_sch

Title: RP2040-ProMini-0011

Size: A4	Date: 2023-07-05	**Rev: 1.1**
KiCad E.D.A. kicad 7.0.5		Id: 1/1