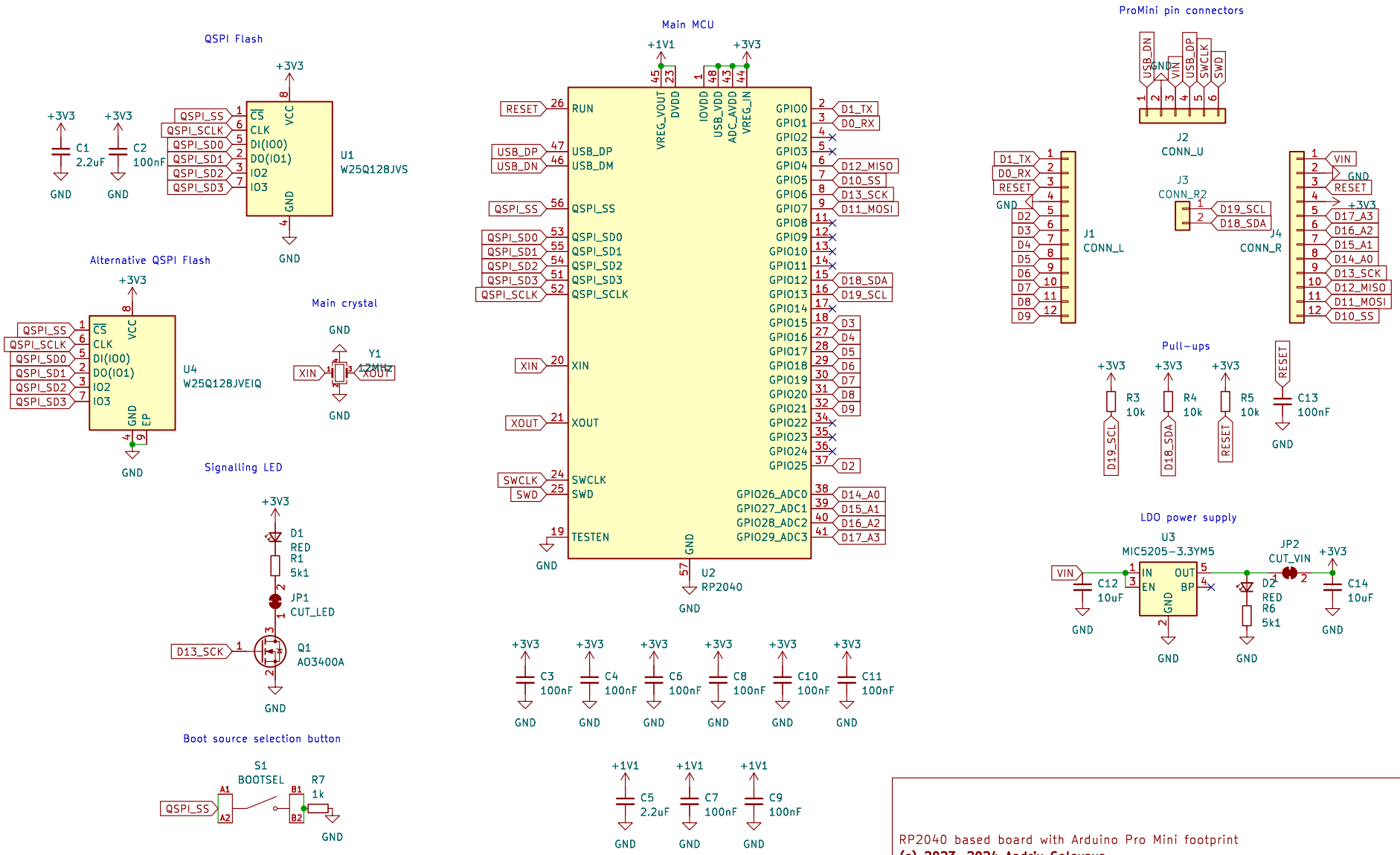

RP2040 based board with Arduino Pro Mini footprint

(c) 2023-2024 Andriy Golovnya

Sheet: /

File: RP2040-ProMini.kicad_sch

Title: RP2040-ProMini-0013

Size: A4	Date: 2024-01-01	**Rev: 1.3**
KiCad E.D.A. kicad 7.0.9		Id: 1/1