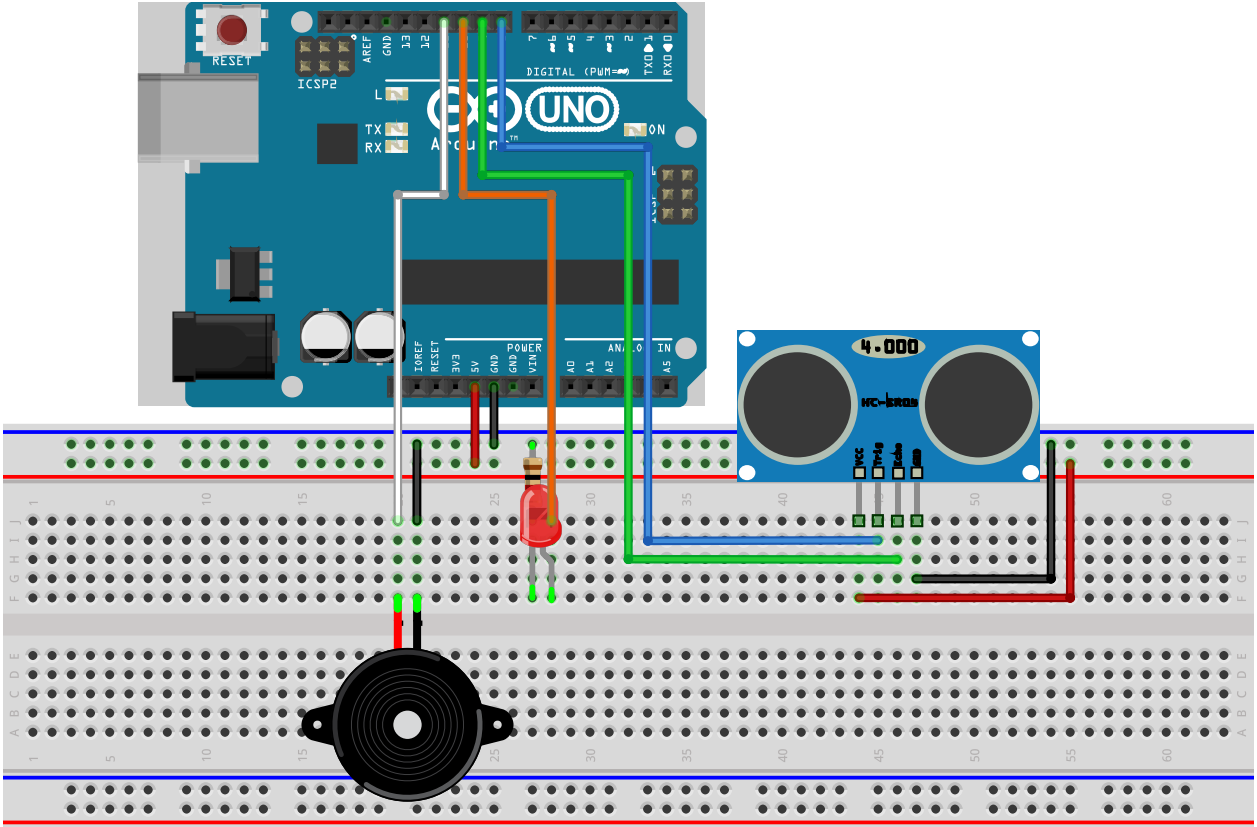
RESET
ICSP2
AREF
GND
13
12
DIGITAL (PWM=~)
TXD 1
RXD 0
L
TX
RX
ON
UNO
IOREF
RESET
3V3
5V
GND
GND
VIN
POWER
A0
A1
A2
A5
IN
4.000
HC-SR04
VCC
Trig
Echo
GND

fritzing