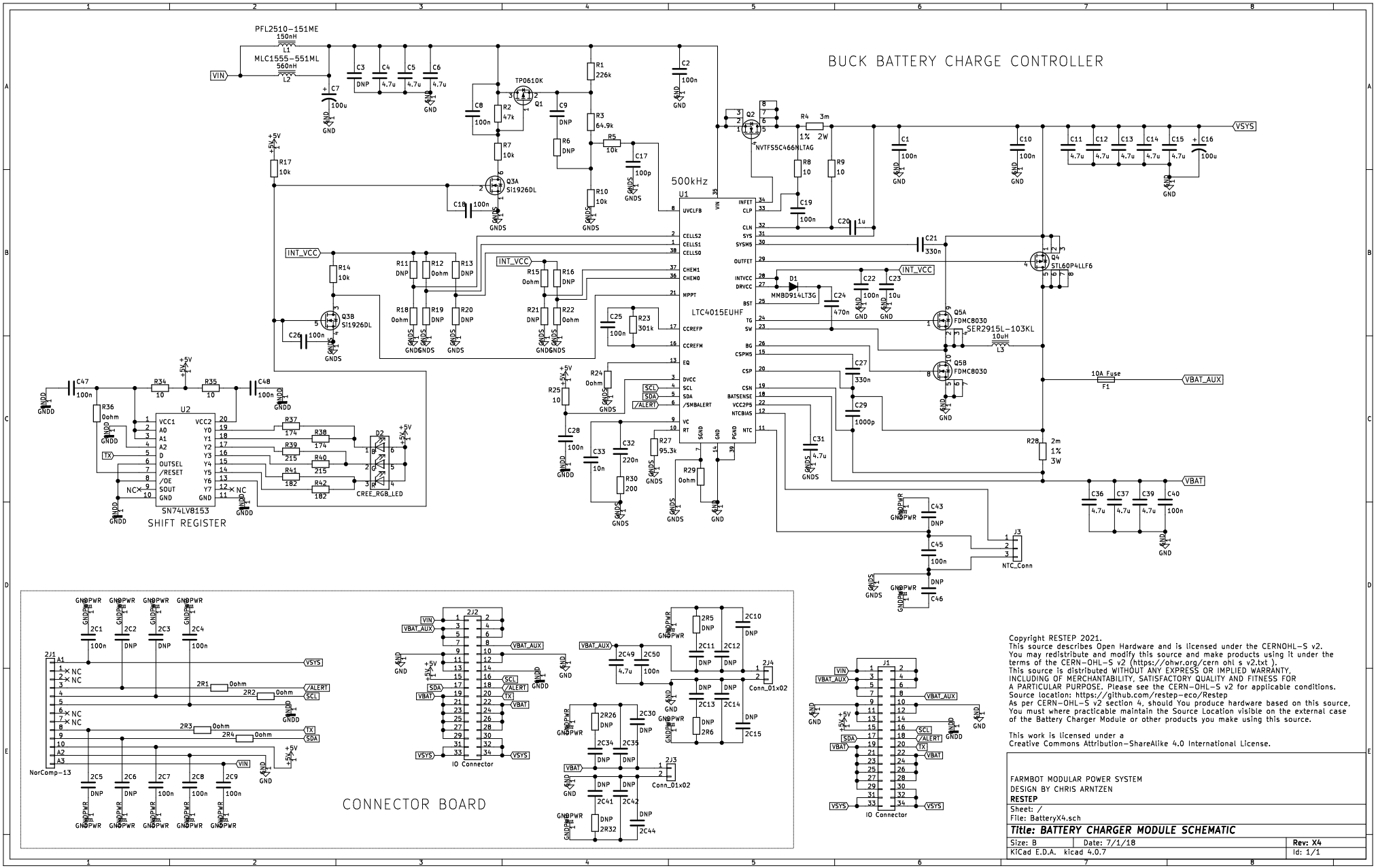

Copyright RESTEP 2021.
This source describes Open Hardware and is licensed under the CERNOHL-S v2.
You may redistribute and modify this source and make products using it under the terms of the CERN-OHL-S v2 (https://ohwr.org/cern_ohl_s_v2.txt).
This source is distributed WITHOUT ANY EXPRESS OR IMPLIED WARRANTY, INCLUDING OF MERCHANTABILITY, SATISFACTORY QUALITY AND FITNESS FOR A PARTICULAR PURPOSE. Please see the CERN-OHL-S v2 for applicable conditions.
Source location: https://github.com/restep-eco/Restep
As per CERN-OHL-S v2 section 4, should You produce hardware based on this source, You must where practicable maintain the Source Location visible on the external case of the Battery Charger Module or other products you make using this source.

This work is licensed under a
Creative Commons Attribution-ShareAlike 4.0 International License.

FARMBOT MODULAR POWER SYSTEM
DESIGN BY CHRIS ARNTZEN
RESTEP

Sheet: /
File: BatteryX4.sch

Title: BATTERY CHARGER MODULE SCHEMATIC

Size: B	Date: 7/1/18	Rev: X4
KiCad E.D.A. kicad 4.0.7		Id: 1/1