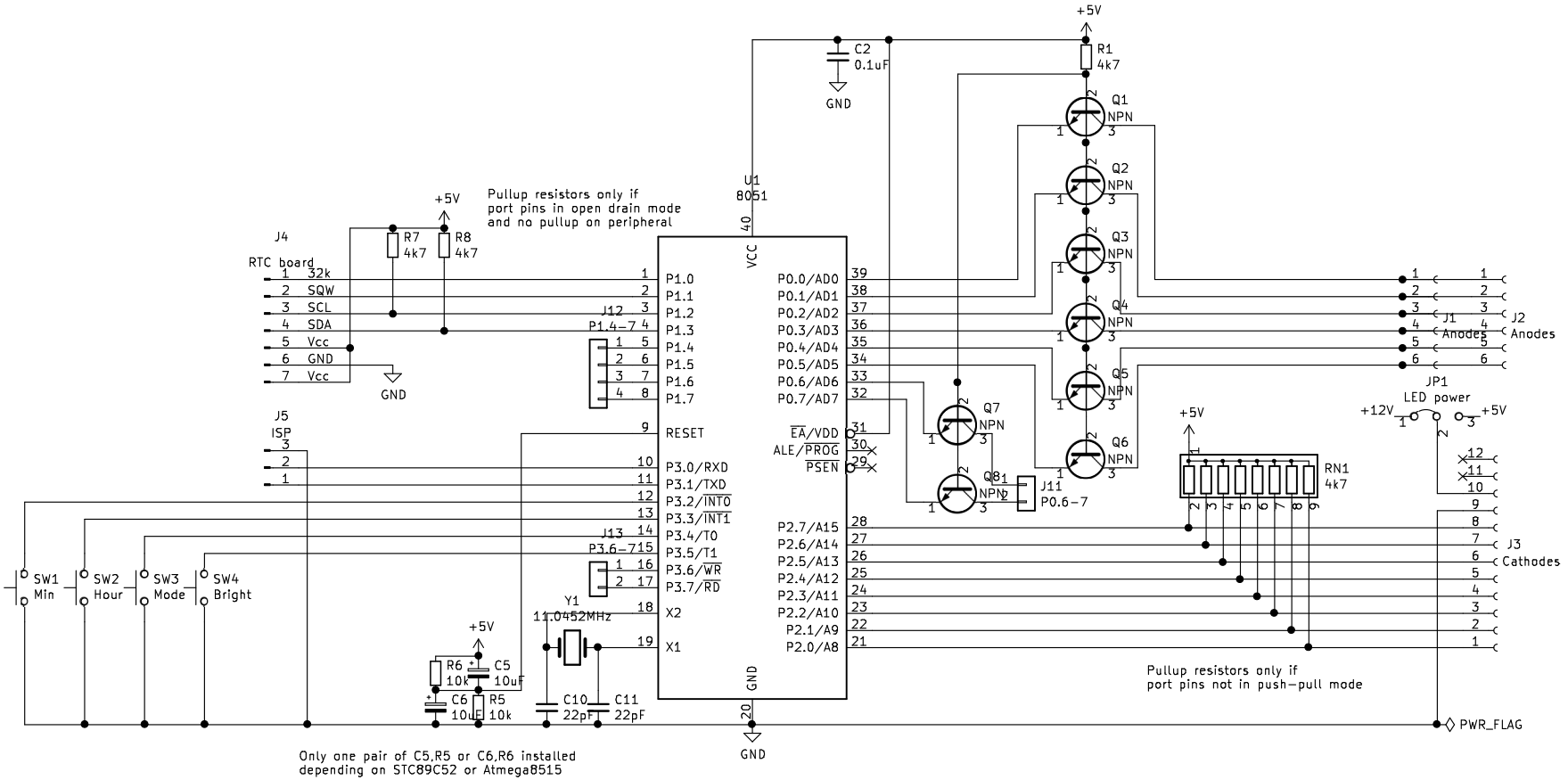


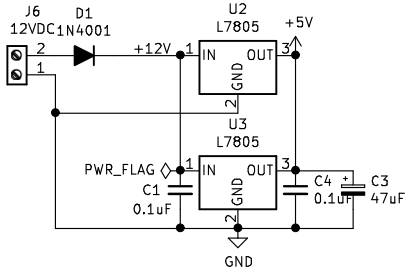


H1 H2 H3 H4 H5

Sheet: /
File: 89c52board.sch

**Title: Clock**

| | | |
|---|---|---|
| Size: A4 | Date: 2020-08-24 | **Rev: 1** |
| KiCad E.D.A. kicad 5.1.10-5.1.10 | | Id: 1/1 |