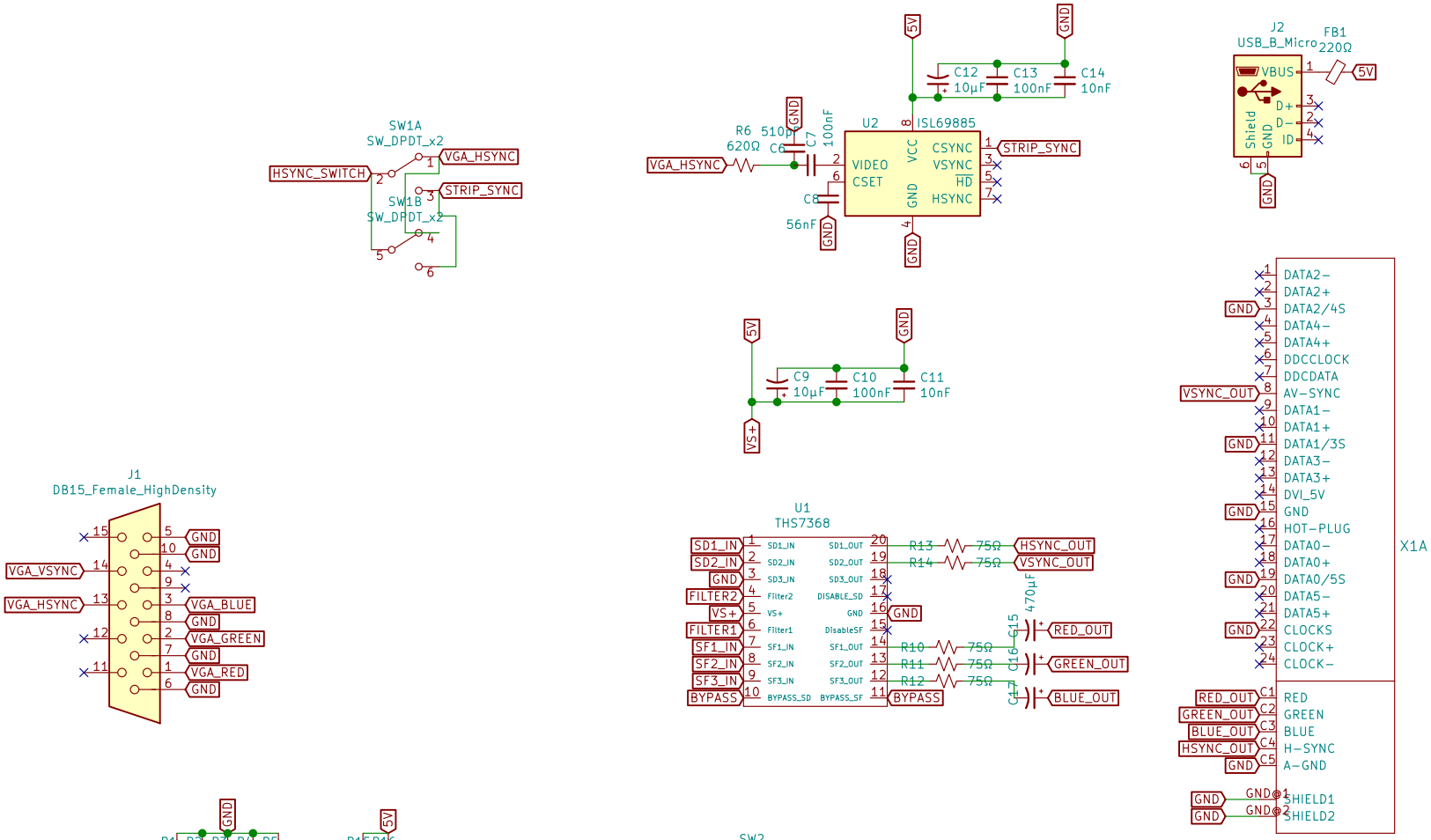

Truth Table: 0 is up, 1 is down

Filter 1	Filter 2	Bypass	
0	0	0	SD 240p 9.5MHz
0	1	0	ED 480p 17MHz
1	0	0	HD 720p 35MHz
1	1	0	FHD 1080p 70MHz
X	X	1	Filter Off

RetroRGB

Sheet: /

File: vga2dvi.sch

Title: VGA2DVI

Size: A4	Date: 2019-03-23	**Rev: 0.1**
KiCad E.D.A. eeschema (5.1.0)-1		Id: 1/1