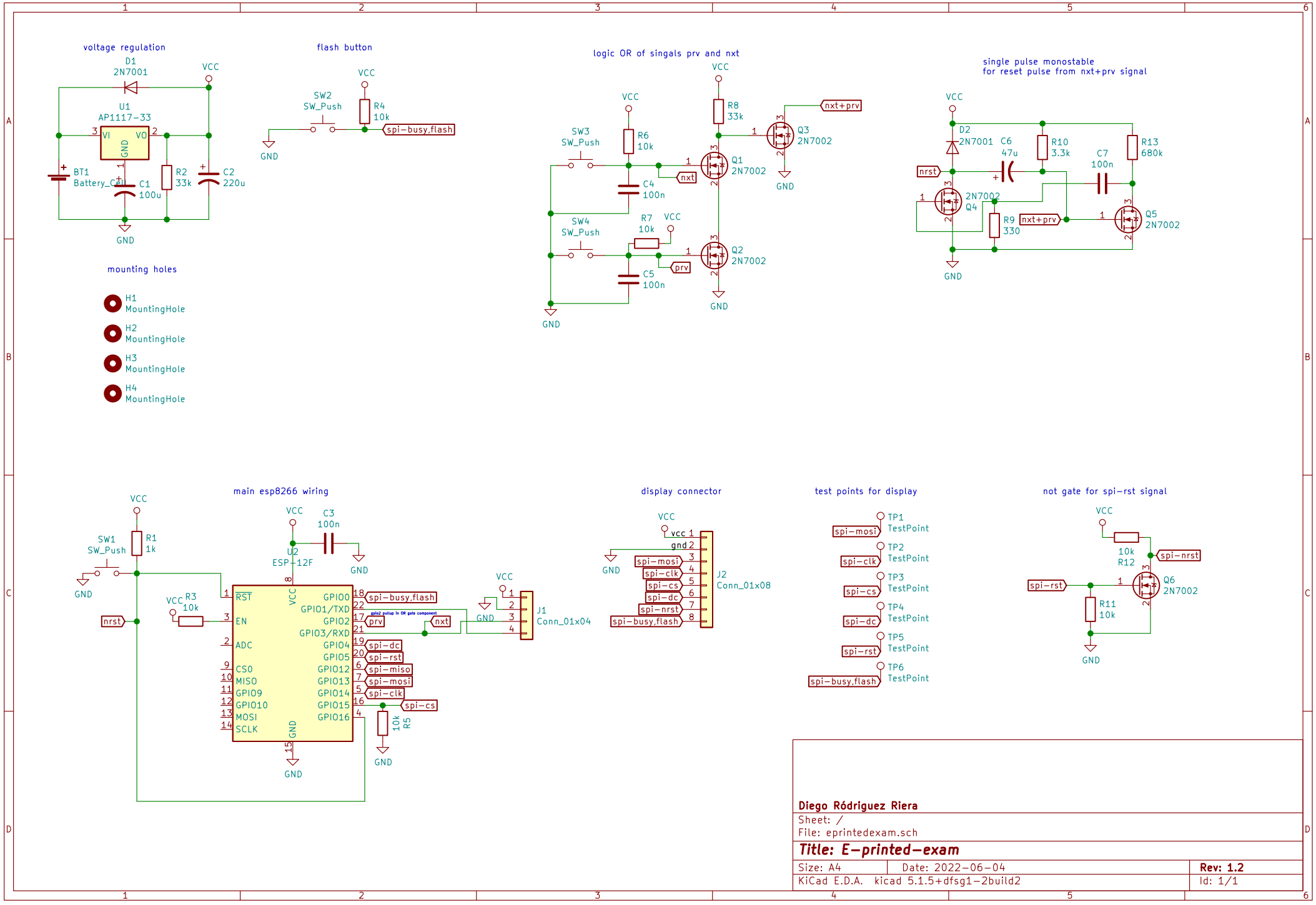

Diego Ródriguez Riera

Sheet: /

File: eprintedexam.sch

Title: E-printed-exam

Size: A4	Date: 2022-06-04	**Rev: 1.2**
KiCad E.D.A. kicad 5.1.5+dfsg1-2build2		Id: 1/1