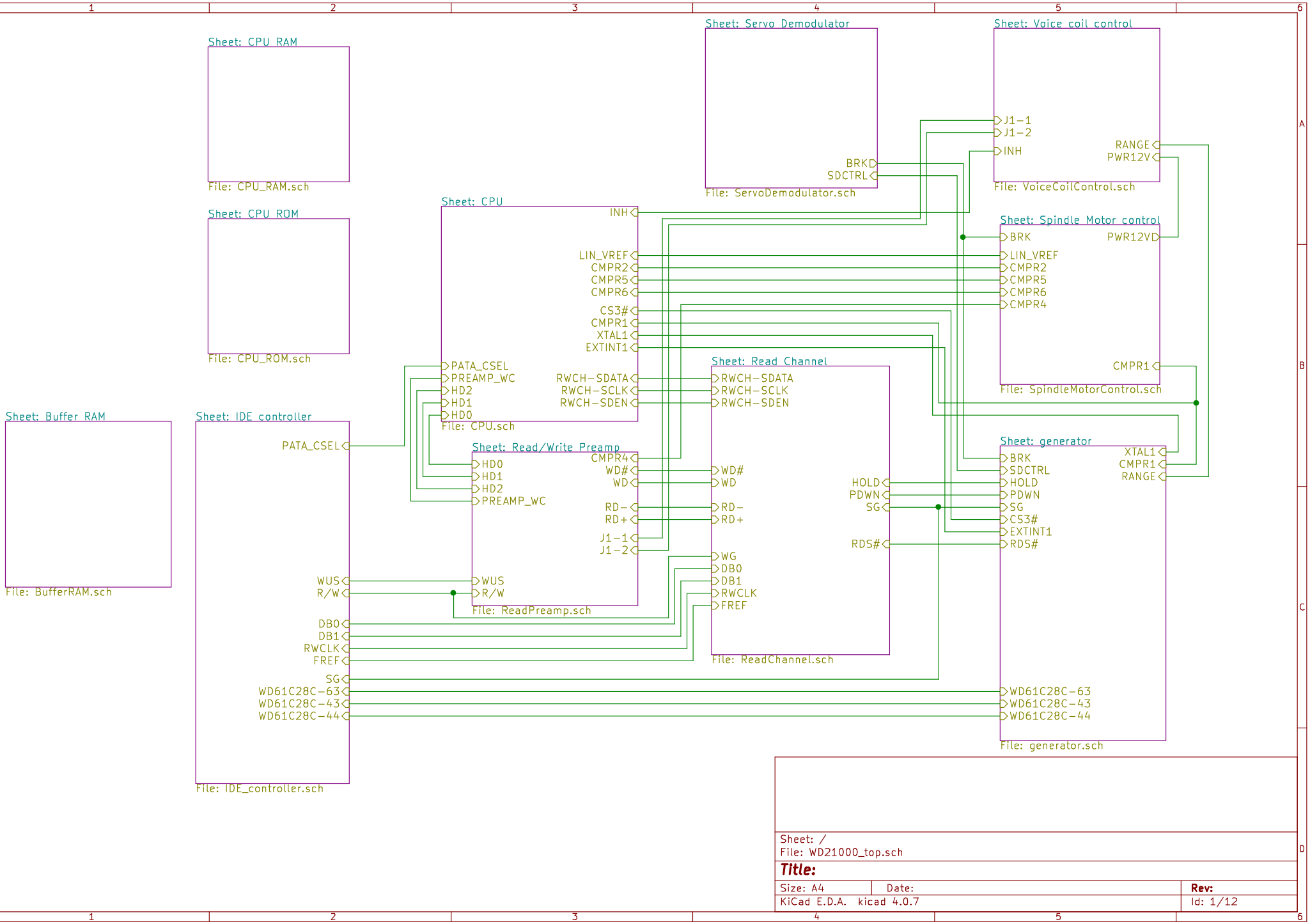
Sheet: CPU_RAM
File: CPU_RAM.sch
Sheet: CPU_ROM
File: CPU_ROM.sch
Sheet: Buffer_RAM
File: BufferRAM.sch
Sheet: IDE_controller
PATA_CSEL
WUS
R/W
DB0
DB1
RWCLK
FREF
SG
WD61C28C-63
WD61C28C-43
WD61C28C-44
File: IDE_controller.sch
Sheet: CPU
INH
LIN_VREF
CMPR2
CMPR5
CMPR6
CS3#
CMPR1
XTAL1
EXTINT1
PATA_CSEL
PREAMP_WC
HD2
HD1
HD0
RWCH-SDATA
RWCH-SCLK
RWCH-SDEN
File: CPU.sch
Sheet: Read/Write Preamp
HD0
HD1
HD2
PREAMP_WC
CMPR4
WD#
WD
RD-
RD+
J1-1
J1-2
WUS
R/W
File: ReadPreamp.sch
Sheet: Read Channel
RWCH-SDATA
RWCH-SCLK
RWCH-SDEN
WD#
WD
RD-
RD+
WG
DB0
DB1
RWCLK
FREF
File: ReadChannel.sch
Sheet: Servo Demodulator
BRK
SDCTRL
File: ServoDemodulator.sch
Sheet: Voice coil control
J1-1
J1-2
INH
RANGE
PWR12V
File: VoiceCoilControl.sch
Sheet: Spindle Motor control
BRK
PWR12V
LIN_VREF
CMPR2
CMPR5
CMPR6
CMPR4
CMPR1
File: SpindleMotorControl.sch
Sheet: generator
XTAL1
CMPR1
RANGE
BRK
SDCTRL
HOLD
PDWN
SG
CS3#
EXTINT1
RDS#
WD61C28C-63
WD61C28C-43
WD61C28C-44
File: generator.sch
HOLD
PDWN
SG
RDS#
Sheet: /
File: WD21000_top.sch
Title:
Size: A4
Date:
Rev:
KiCad E.D.A. kicad 4.0.7
Id: 1/12

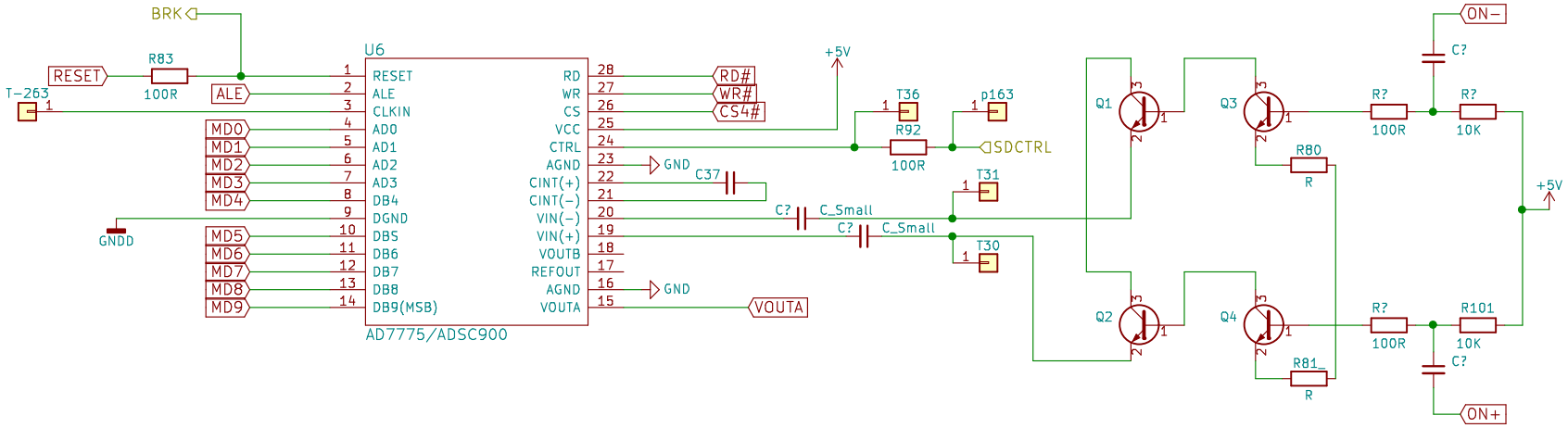

Sheet: /Servo Demodulator/		
File: ServoDemodulator.sch		
Title:		
Size: A4	Date:	**Rev:**
KiCad E.D.A. kicad 4.0.7		Id: 2/12

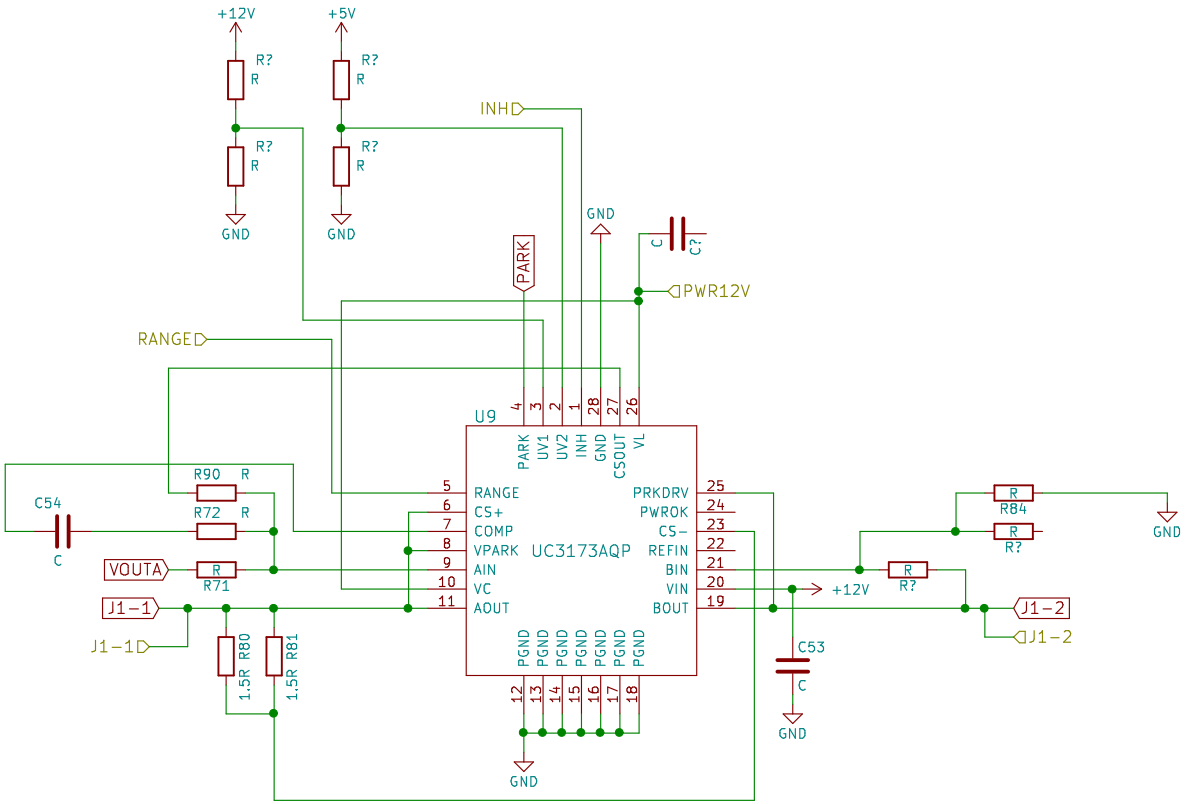

Sheet: /Voice coil control/		
File: VoiceCoilControl.sch		
Title:		
Size: A4	Date:	**Rev:**
KiCad E.D.A. kicad 4.0.7		Id: 3/12

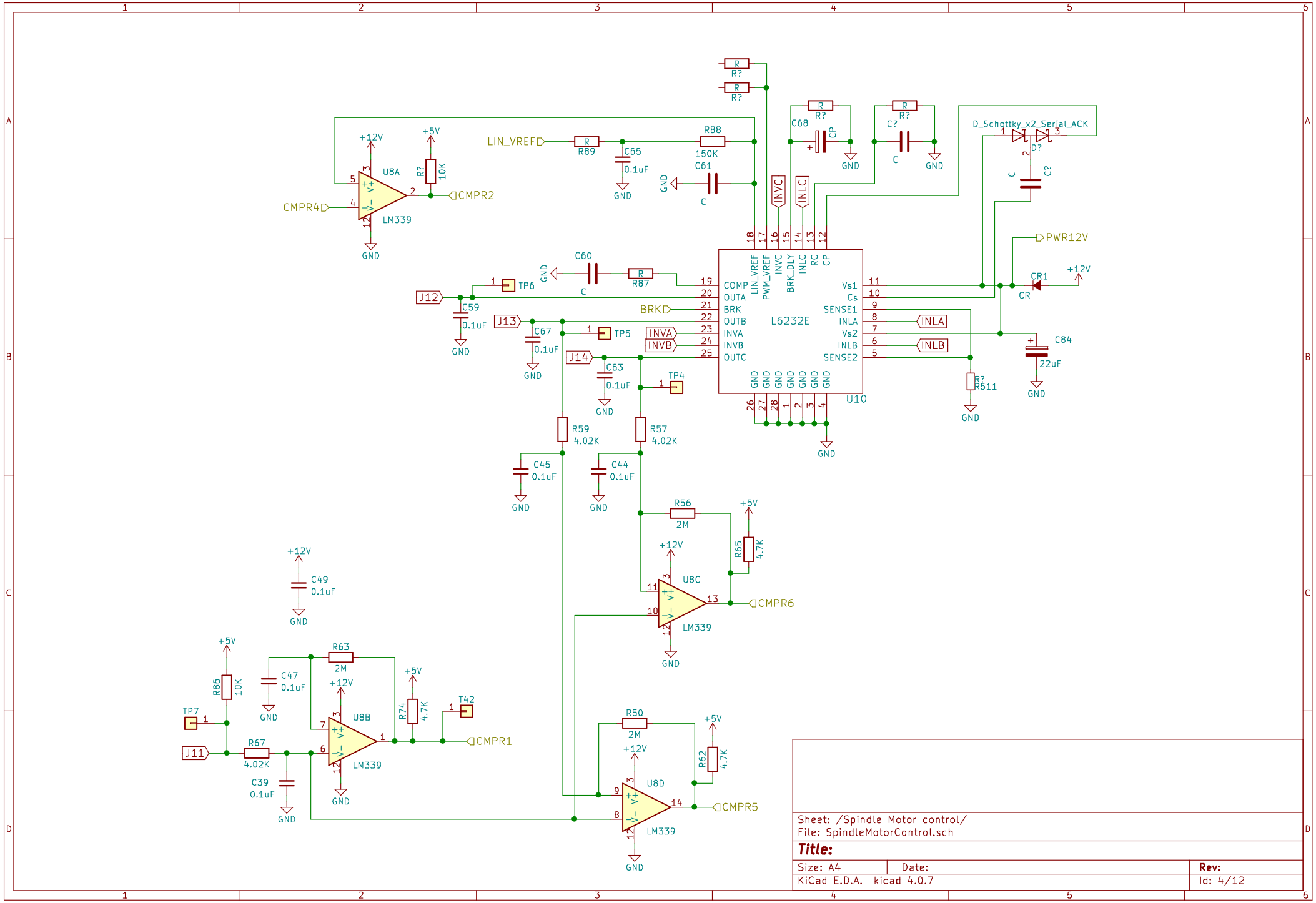

Sheet: /Spindle Motor control/
File: SpindleMotorControl.sch

Title:

Size: A4	Date:	**Rev:**
KiCad E.D.A. kicad 4.0.7		Id: 4/12

Sheet: /Buffer RAM/
File: BufferRAM.sch

Title:

Size: A4	Date:	**Rev:**
KiCad E.D.A. kicad 4.0.7		Id: 5/12

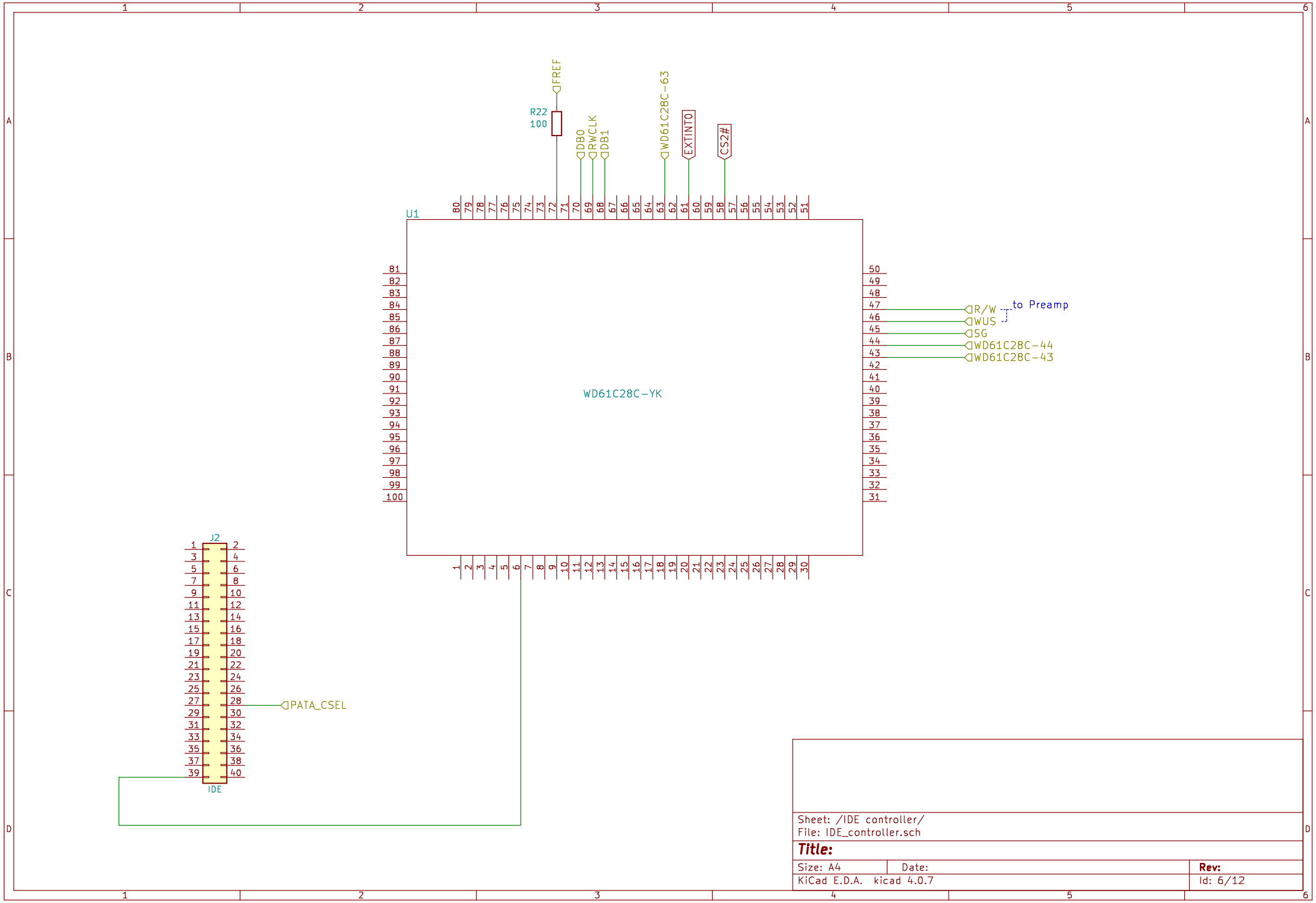

Sheet: /IDE controller/
File: IDE_controller.sch

Title:

Size: A4	Date:	**Rev:**
KiCad E.D.A. kicad 4.0.7		Id: 6/12

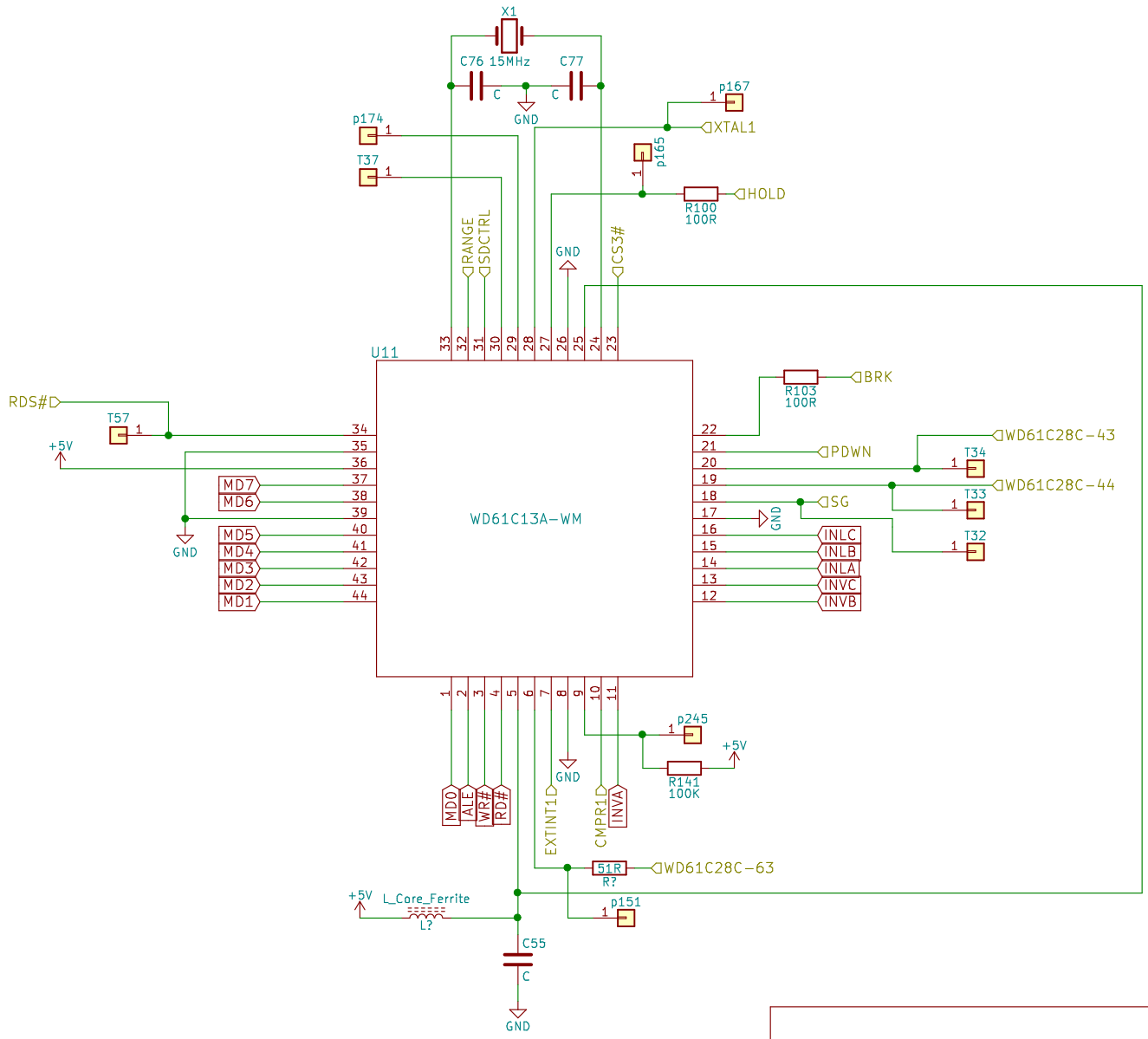

Sheet: /generator/		
File: generator.sch		
Title:		
Size: A4	Date:	**Rev:**
KiCad E.D.A. kicad 4.0.7		Id: 7/12

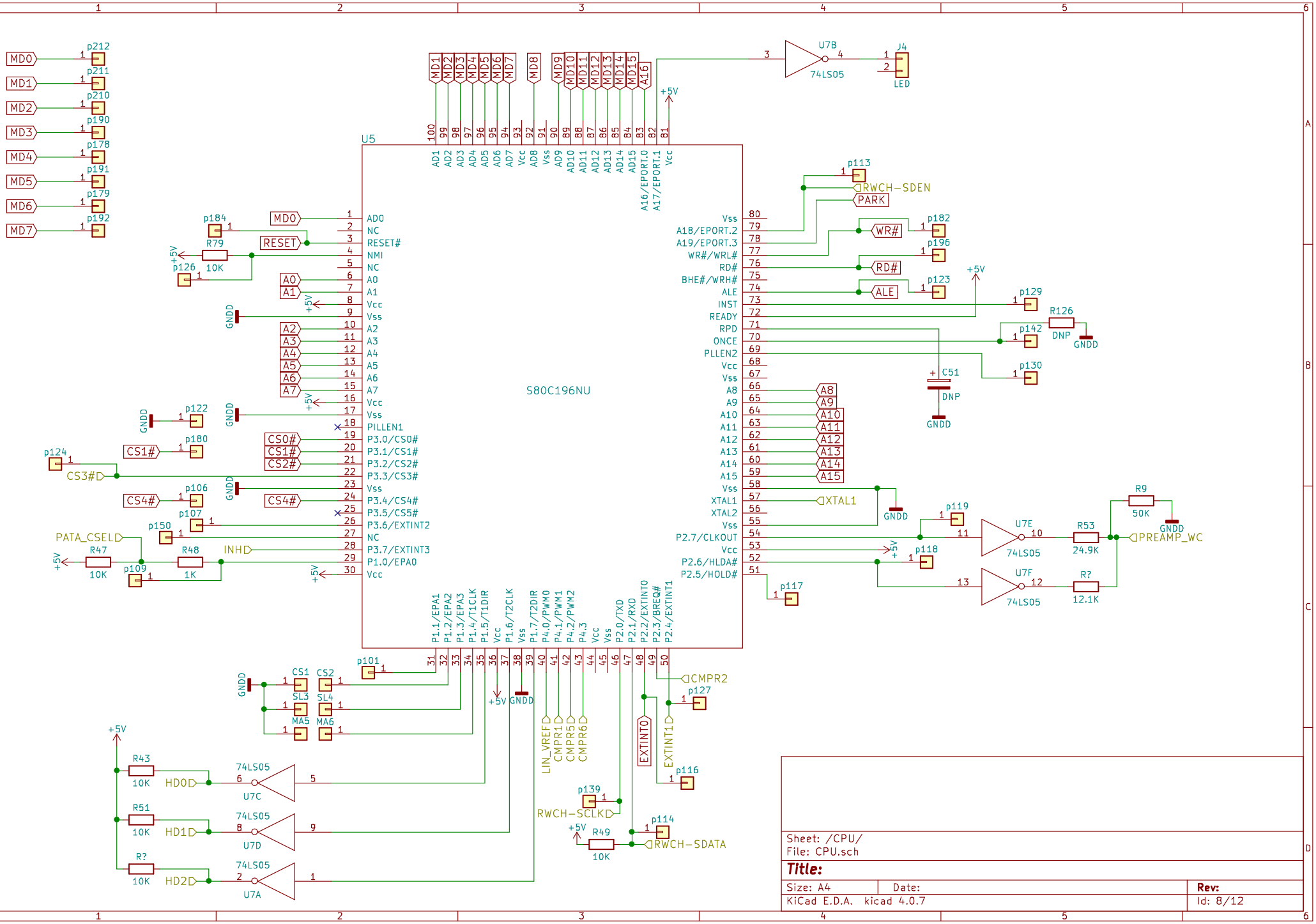
MD0
MD1
MD2
MD3
MD4
MD5
MD6
MD7
p212
p211
p210
p190
p178
p191
p179
p192
U5
S80C196NU
AD0
RESET#
NMI
A0
A1
A2
A3
A4
A5
A6
A7
PILLEN1
P3.0/CS0#
P3.1/CS1#
P3.2/CS2#
P3.3/CS3#
P3.4/CS4#
P3.5/CS5#
P3.6/EXTINT2
P3.7/EXTINT3
P1.0/EPA0
XTAL1
XTAL2
P2.7/CLKOUT
P2.6/HLDA#
P2.5/HOLD#
RWCH-SDEN
PARK
WR#
RD#
ALE
INST
READY
RPD
ONCE
PLLEN2
A8
A9
A10
A11
A12
A13
A14
A15
U7B
74LS05
J4
LED
p113
p182
p196
p123
p129
p142
p130
R126
DNP
C51
p184
R79
10K
p126
RESET
A0
A1
A2
A3
A4
A5
A6
A7
p122
p180
CS1#
p124
CS3#
p106
CS4#
p107
p150
PATA_CSEL
R47
10K
R48
1K
p109
INH
p119
p118
p117
U7E
U7F
R53
24.9K
R9
50K
R?
12.1K
PREAMP_WC
p101
CS1
CS2
SL3
SL4
MA5
MA6
CMPR2
p127
p116
EXTINT0
EXTINT1
LIN_VREF
CMPR1
CMPR5
CMPR6
p139
RWCH-SCLK
p114
RWCH-SDATA
R49
10K
R43
10K
HD0
U7C
R51
10K
HD1
U7D
R?
10K
HD2
U7A
GNDD
+5V
Sheet: /CPU/
File: CPU.sch
Title:
Size: A4
Date:
Rev:
KiCad E.D.A. kicad 4.0.7
Id: 8/12

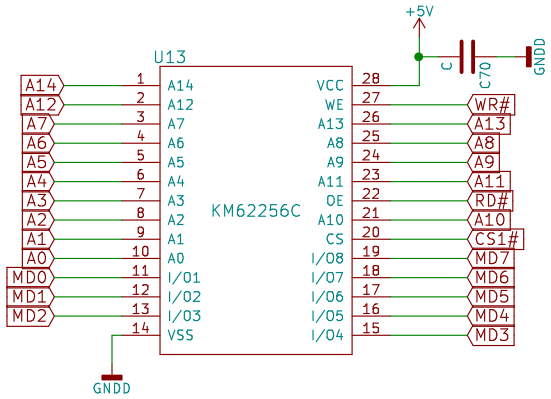

Sheet: /CPU RAM/ File: CPU_RAM.sch		
Title:		
Size: A4	Date:	**Rev:**
KiCad E.D.A. kicad 4.0.7		Id: 9/12

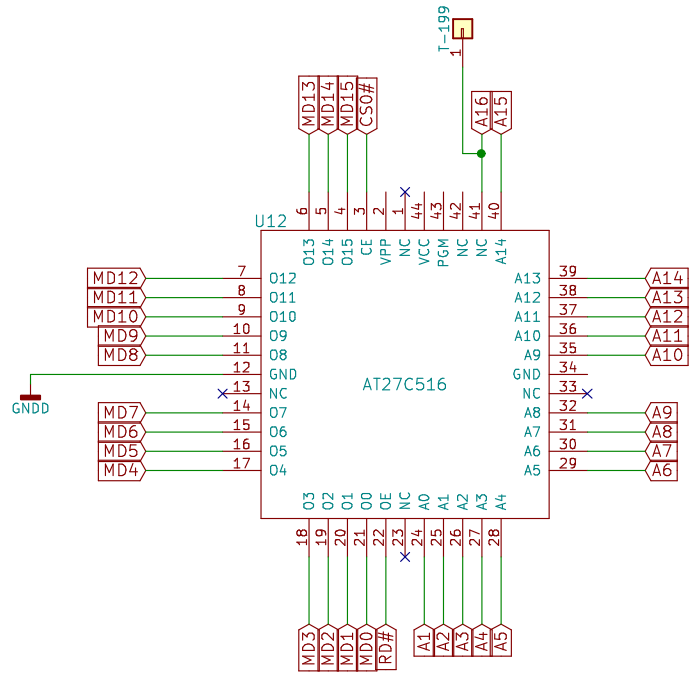

Sheet: /CPU ROM/
File: CPU_ROM.sch

Title:

Size: A4	Date:	**Rev:**
KiCad E.D.A. kicad 4.0.7		Id: 10/12

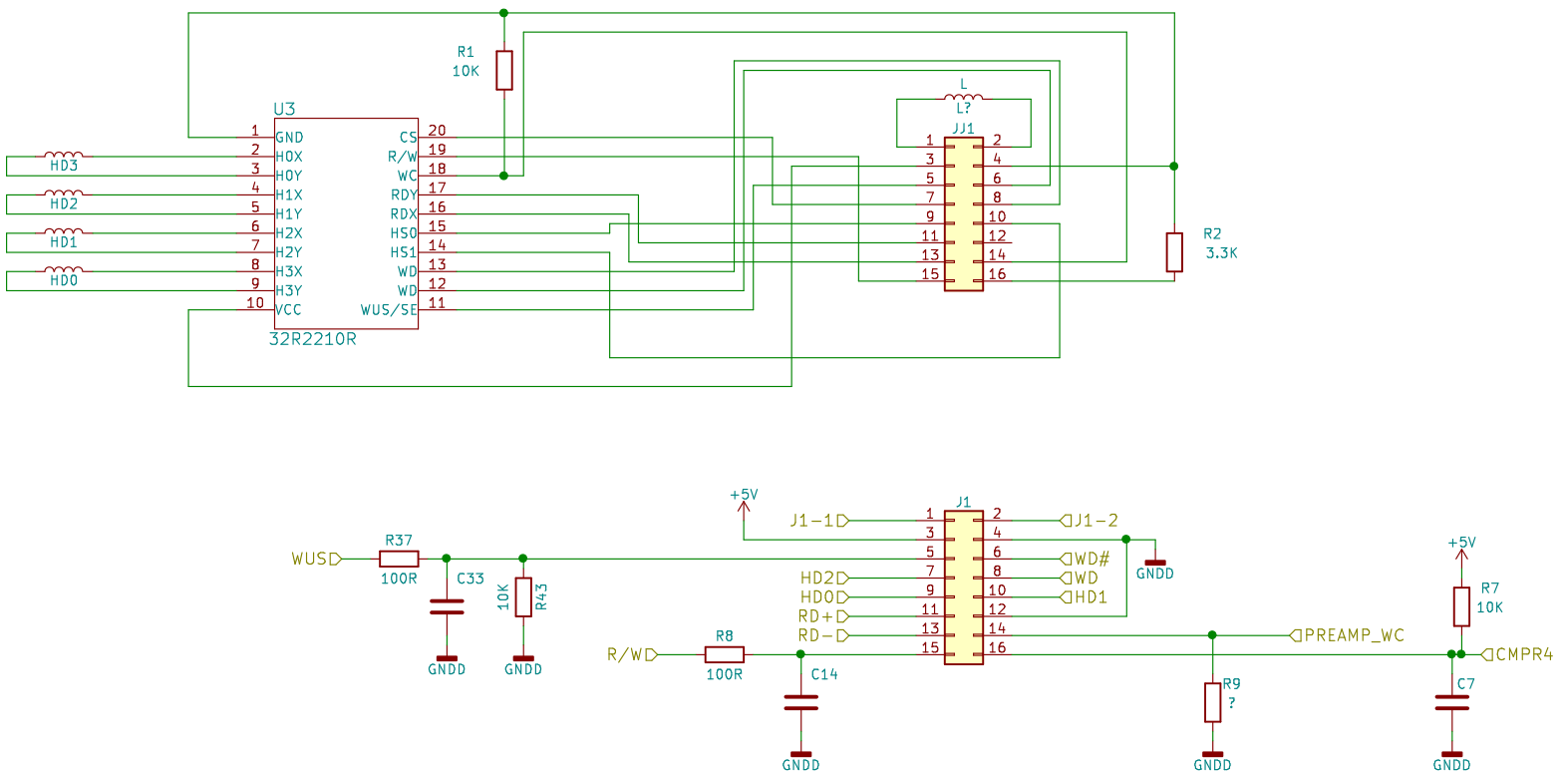

Sheet: /Read/Write Preamp/ File: ReadPreamp.sch		
Title:		
Size: A4	Date:	**Rev:**
KiCad E.D.A. kicad 4.0.7		Id: 11/12

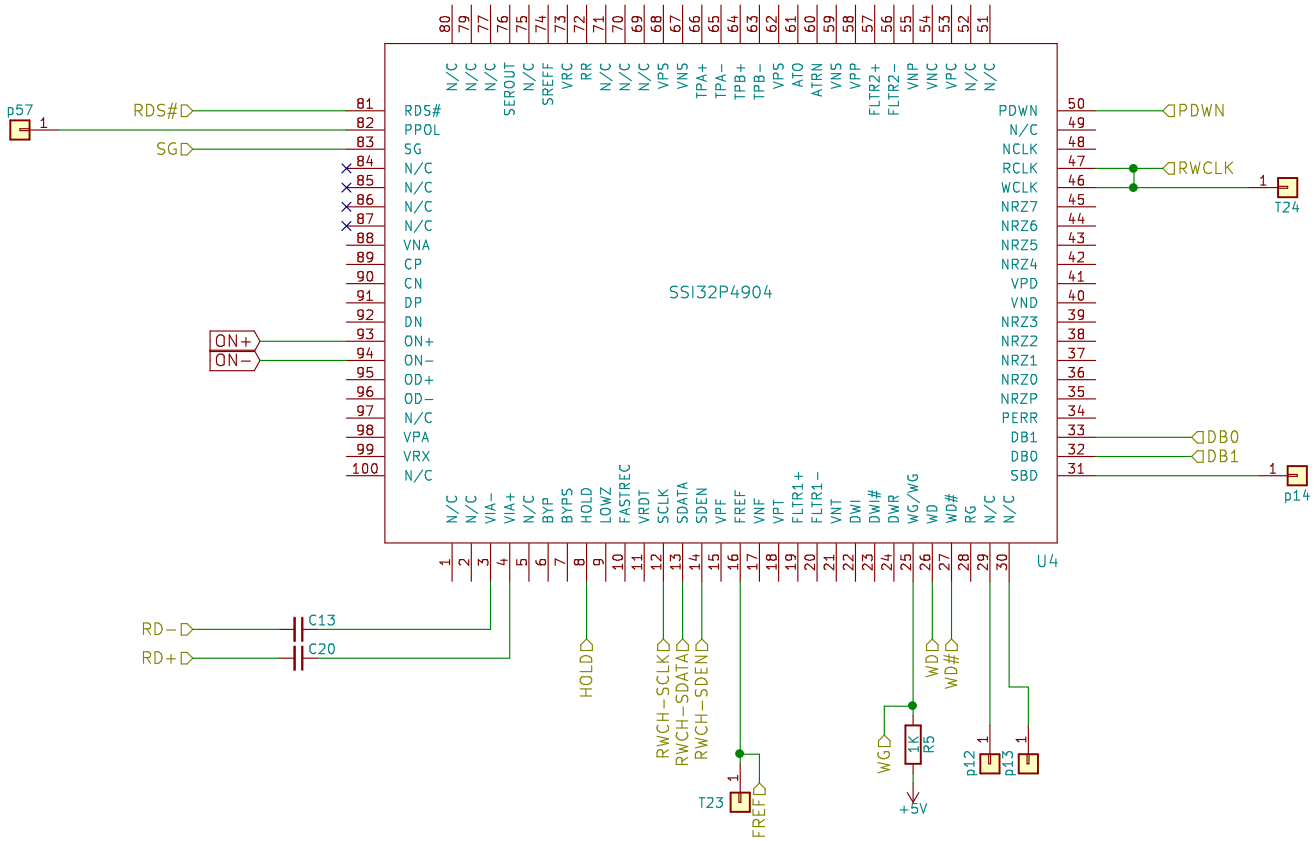

Sheet: /Read Channel/ File: ReadChannel.sch		
Title:		
Size: A4	Date:	**Rev:**
KiCad E.D.A. kicad 4.0.7		Id: 12/12