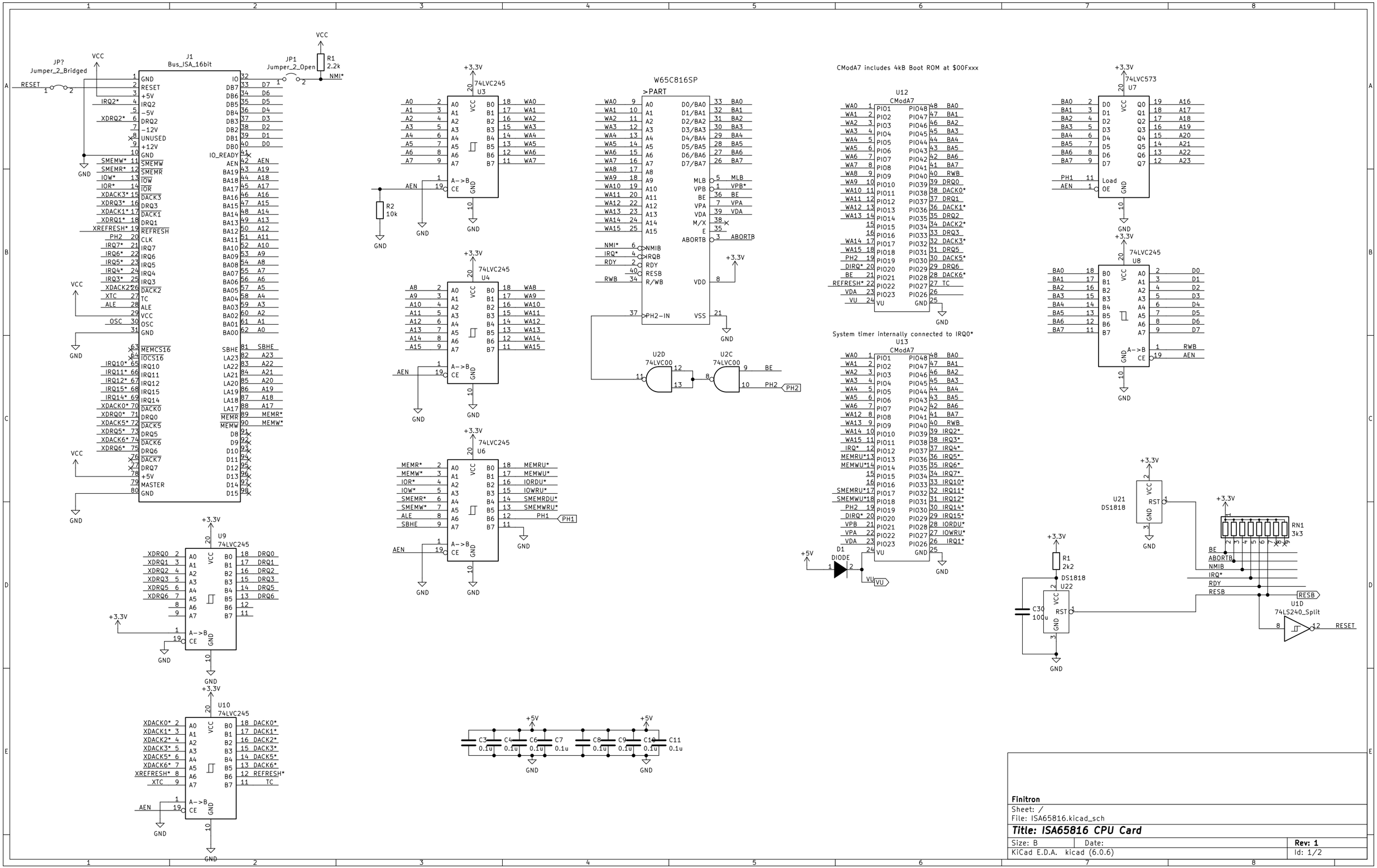

Finitron

Sheet: /

File: ISA65816.kicad_sch

Title: ISA65816 CPU Card

Size: B	Date:	**Rev: 1**
KiCad E.D.A. kicad (6.0.6)		Id: 1/2

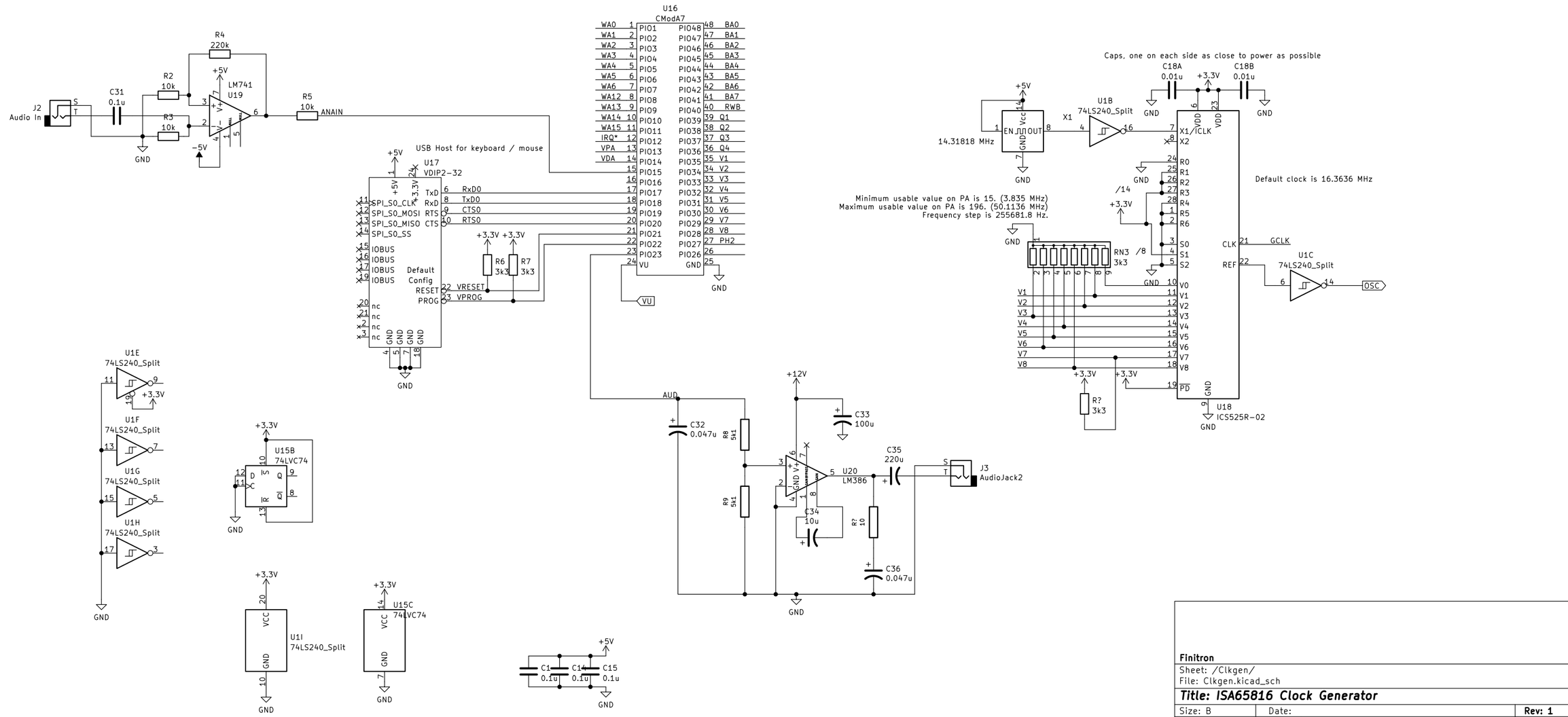

Finitron

Sheet: /Clkgen/

File: Clkgen.kicad_sch

Title: ISA65816 Clock Generator

Size: B	Date:	**Rev: 1**
KiCad E.D.A. kicad (6.0.6)		Id: 2/2