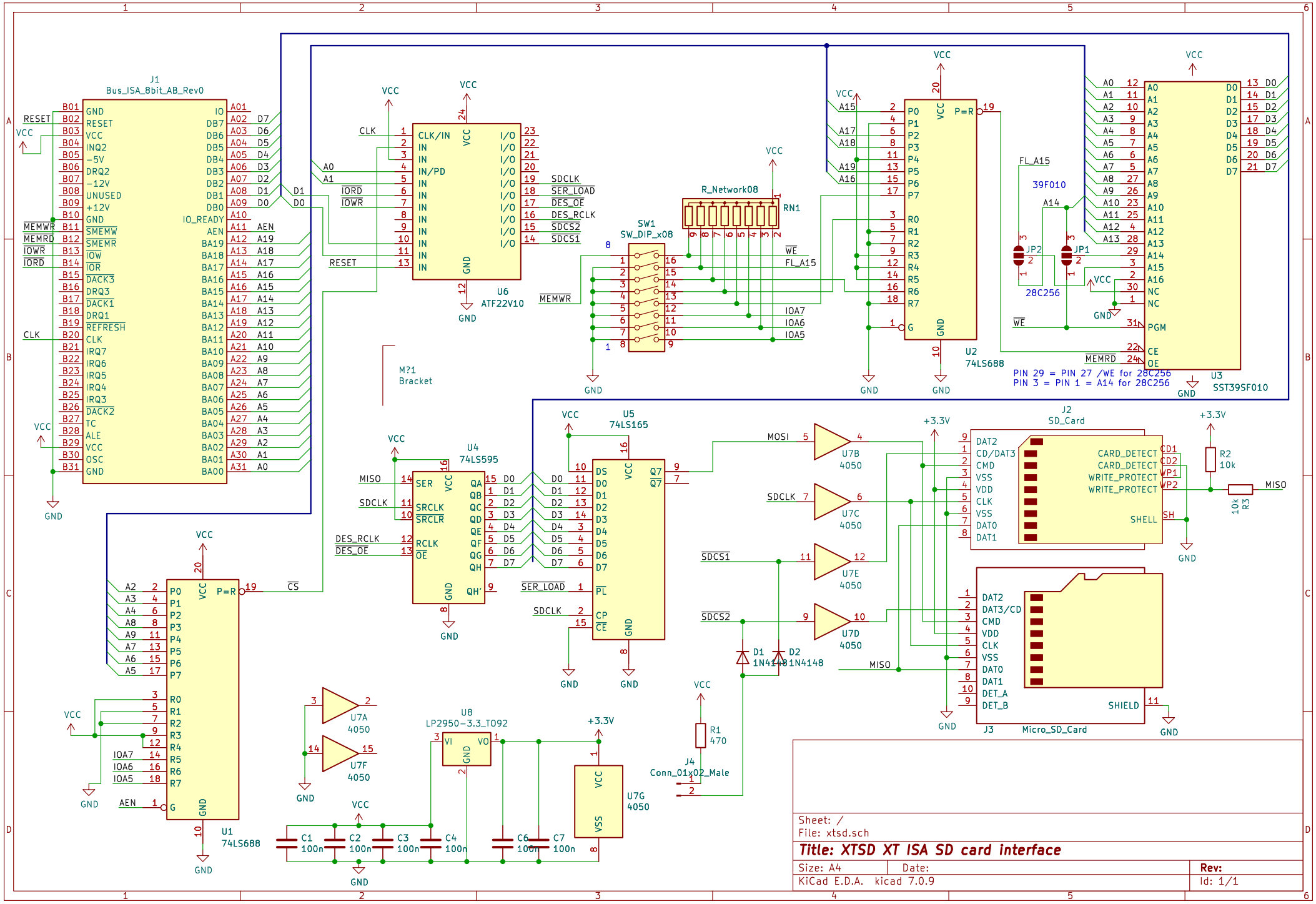
J1
Bus_ISA_8bit_AB_Rev0
U6
ATF22V10
SW1
SW_DIP_x08
R_Network08
RN1
U2
74LS688
U3
SST39SF010
39F010
28C256
JP1
JP2
PIN 29 = PIN 27 /WE for 28C256
PIN 3 = PIN 1 = A14 for 28C256
M?1
Bracket
U4
74LS595
U5
74LS165
U7B
4050
U7C
4050
U7E
4050
U7D
4050
J2
SD_Card
J3
Micro_SD_Card
R2
10k
R3
10k
D1
1N4148
D2
1N4148
R1
470
J4
Conn_01x02_Male
U1
74LS688
U7A
4050
U7F
4050
U8
LP2950-3.3_TO92
U7G
4050
C1
100n
C2
100n
C3
100n
C4
100n
C6
100n
C7
100n
Sheet: /
File: xtsd.sch
Title: XTSD XT ISA SD card interface
Size: A4
Date:
Rev:
KiCad E.D.A. kicad 7.0.9
Id: 1/1