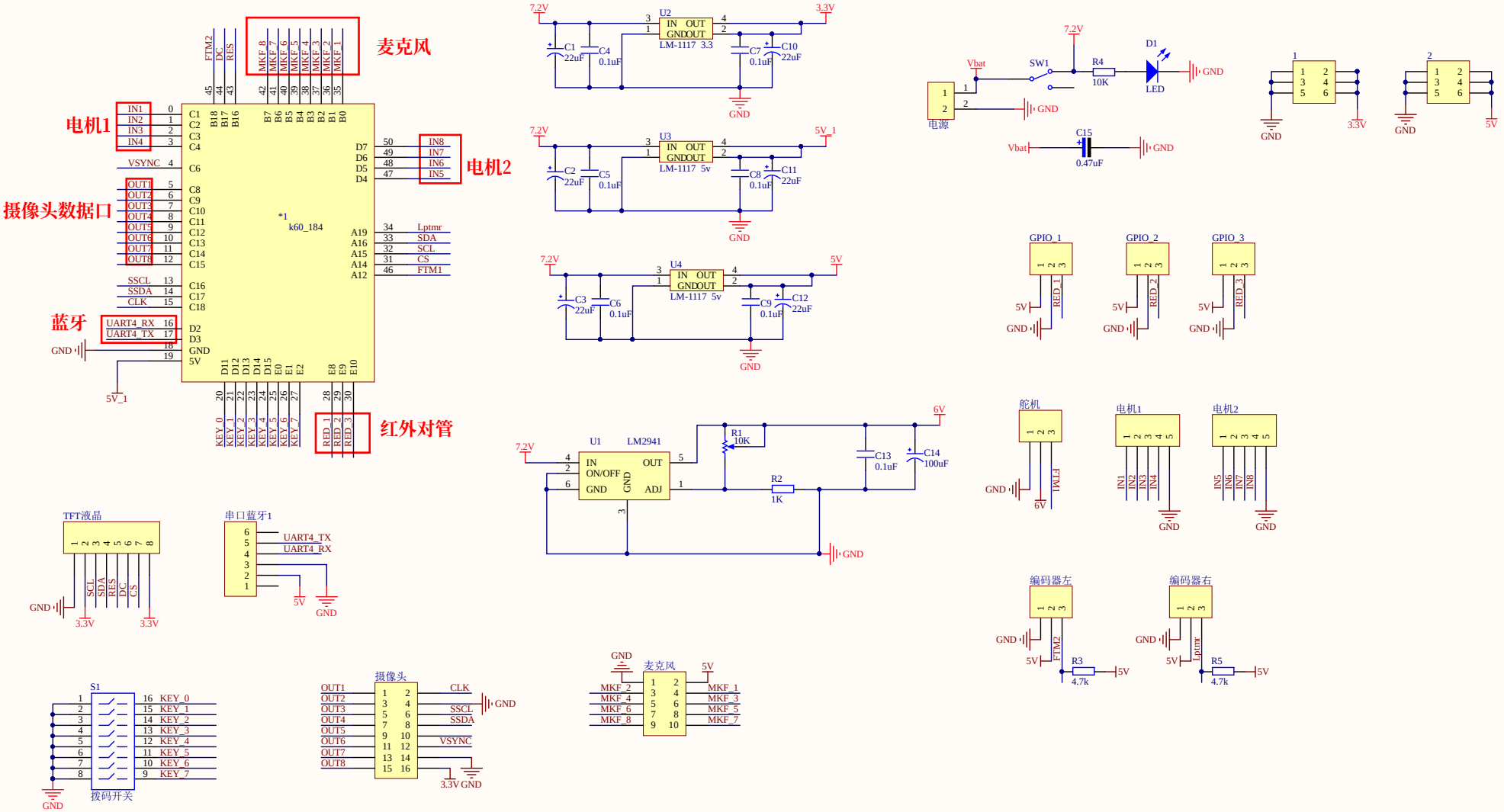

Title		
Size A3	Number	Revision
Date: 2019/5/28	Sheet	of
File: G:\比赛\恩智浦\14信标\信标\主板PCB\主板.SchDoc	Drawn By:	