REVISION RECORD			
LTR	ECO NO:	APPROVED:	DATE:

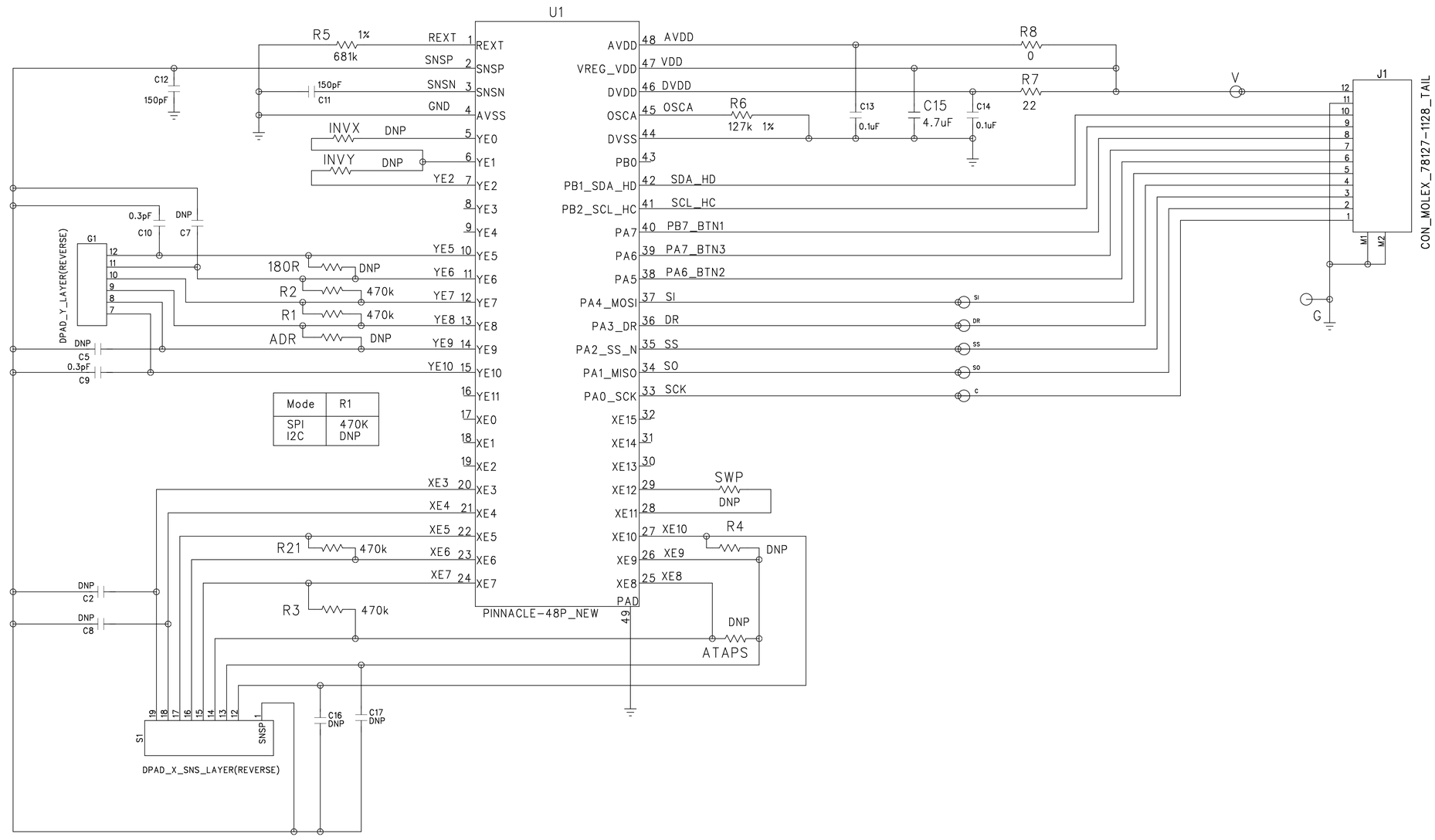

Mode	R1
SPI	470K
I2C	DNP

H1 HOLE TH_0P5MM_MOUSEBITE
H2 HOLE TH_0P5MM_MOUSEBITE
H3 HOLE TH_0P5MM_MOUSEBITE
H4 HOLE TH_0P5MM_MOUSEBITE
H5 HOLE TH_0P5MM_MOUSEBITE
H6 HOLE TH_0P5MM_MOUSEBITE
H7 HOLE TH_0P5MM_MOUSEBITE
H8 HOLE TH_0P5MM_MOUSEBITE
H9 HOLE TH_0P5MM_MOUSEBITE
H10 HOLE TH_0P5MM_MOUSEBITE

DRAWN: Doug Steck	DATED: 04/04/17	COMPANY: CIRQUE CORPORATION	
CHECKED:	DATED:	TITLE: SPI 23MM Circular Sensor TM023023-2024	
QUALITY CONTROL:	DATED:	CODE: / SIZE: / DRAWING NO: 8C-000619-00	REV: A00
RELEASED:	DATED:	SCALE:	SHEET: 1 OF 1