Version 1.2

# 16 X 16 STEPPER

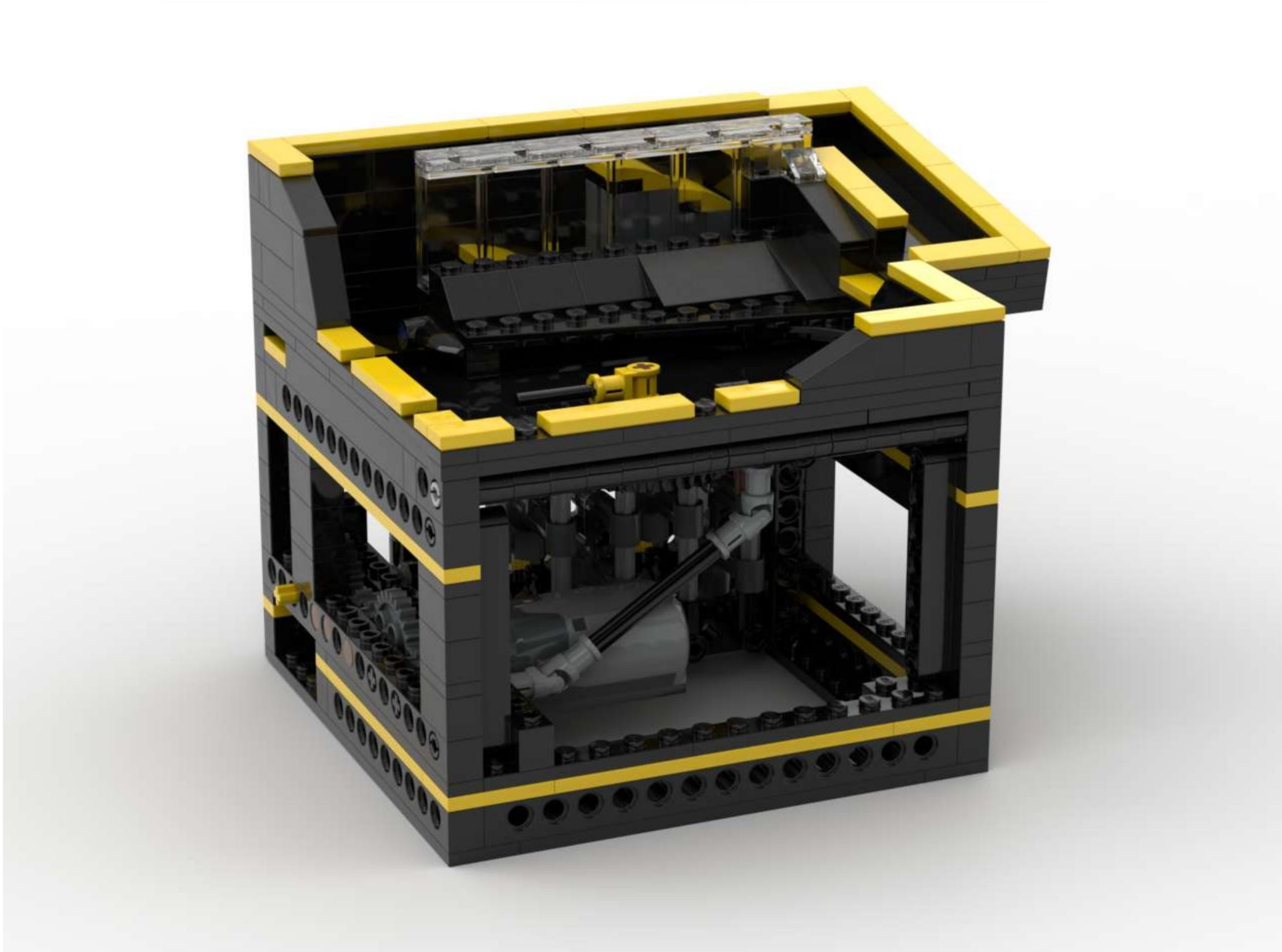

Copyright 2018 Ryk Field,
Attribution-NonCommercial 4.0 International (CC BY-NC 4.0)
https://creativecommons.org/licenses/by-nc/4.0/

REF03

This "16x16 Stepper" GBC was built as a contribution toward the greatballpit.com Community Module Challenge in 2018.

The visual design is heavily influenced by the 2015 stackable Brickworld Chicago module.

The steps are driven by an Akiyuki mechanism.

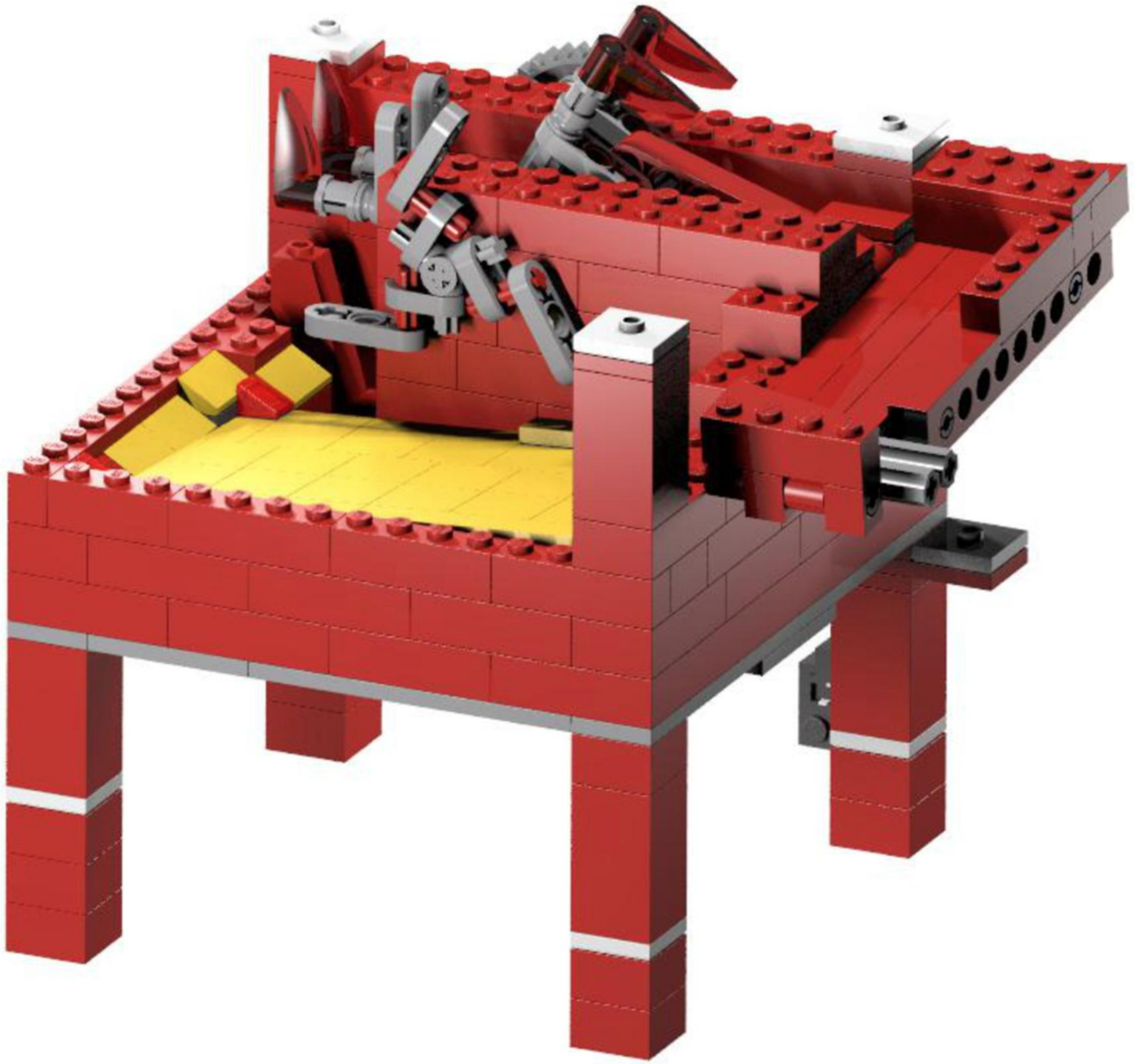

Brickworld Chicago 2015 module by Bryan Bonahoom

# 1

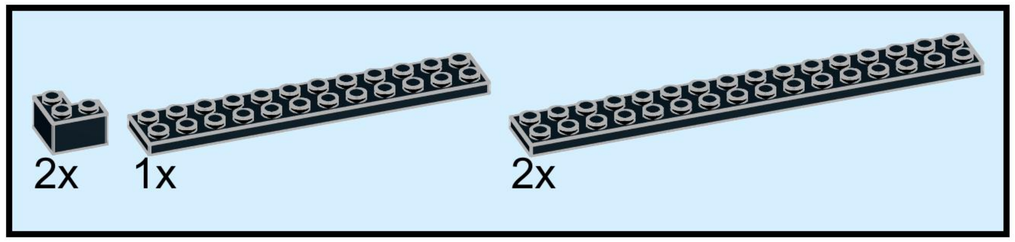


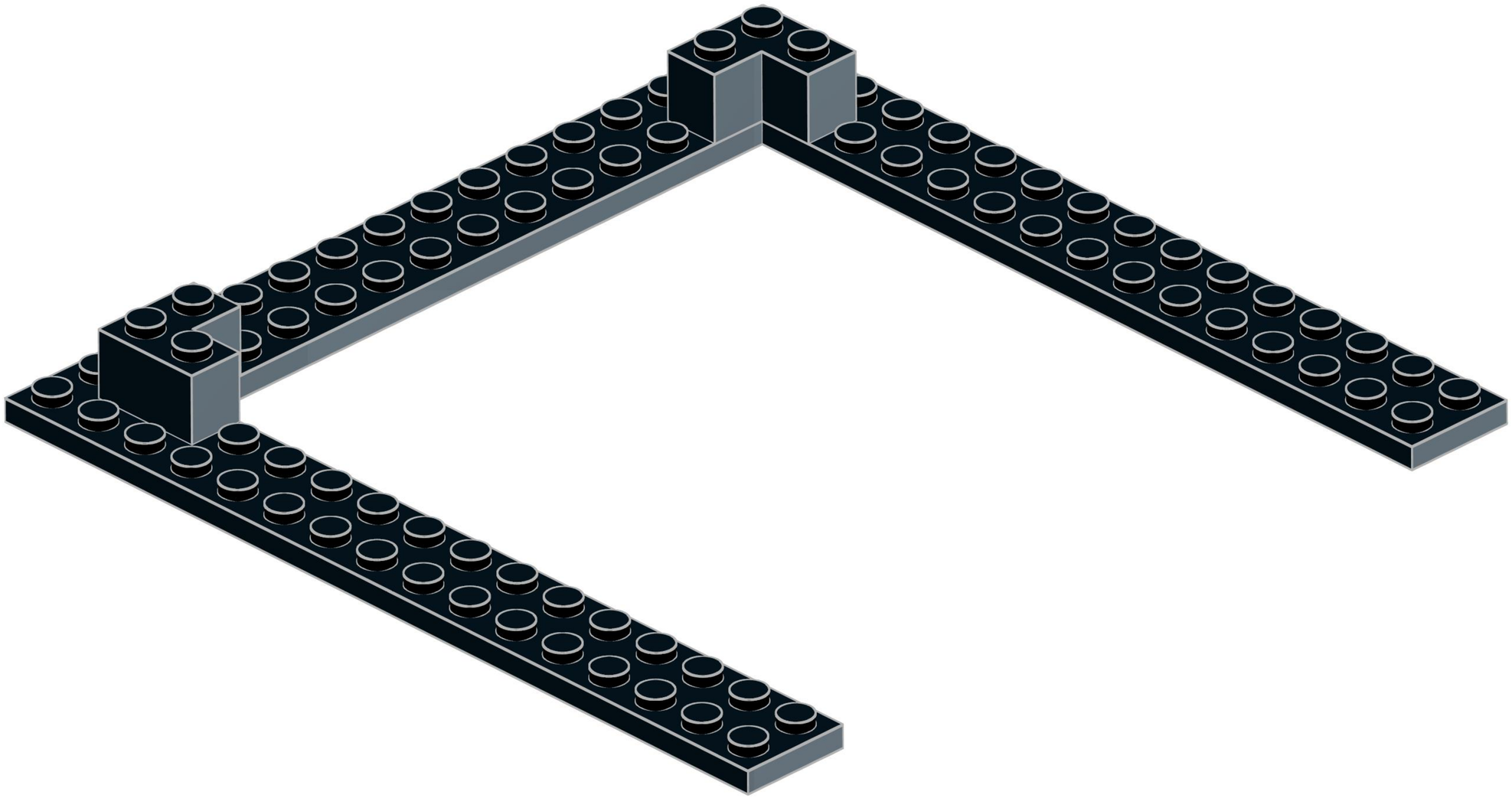

# 2

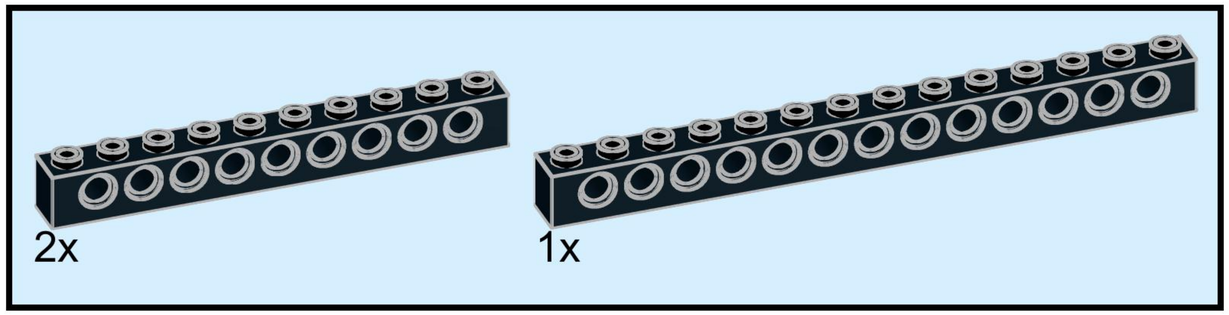


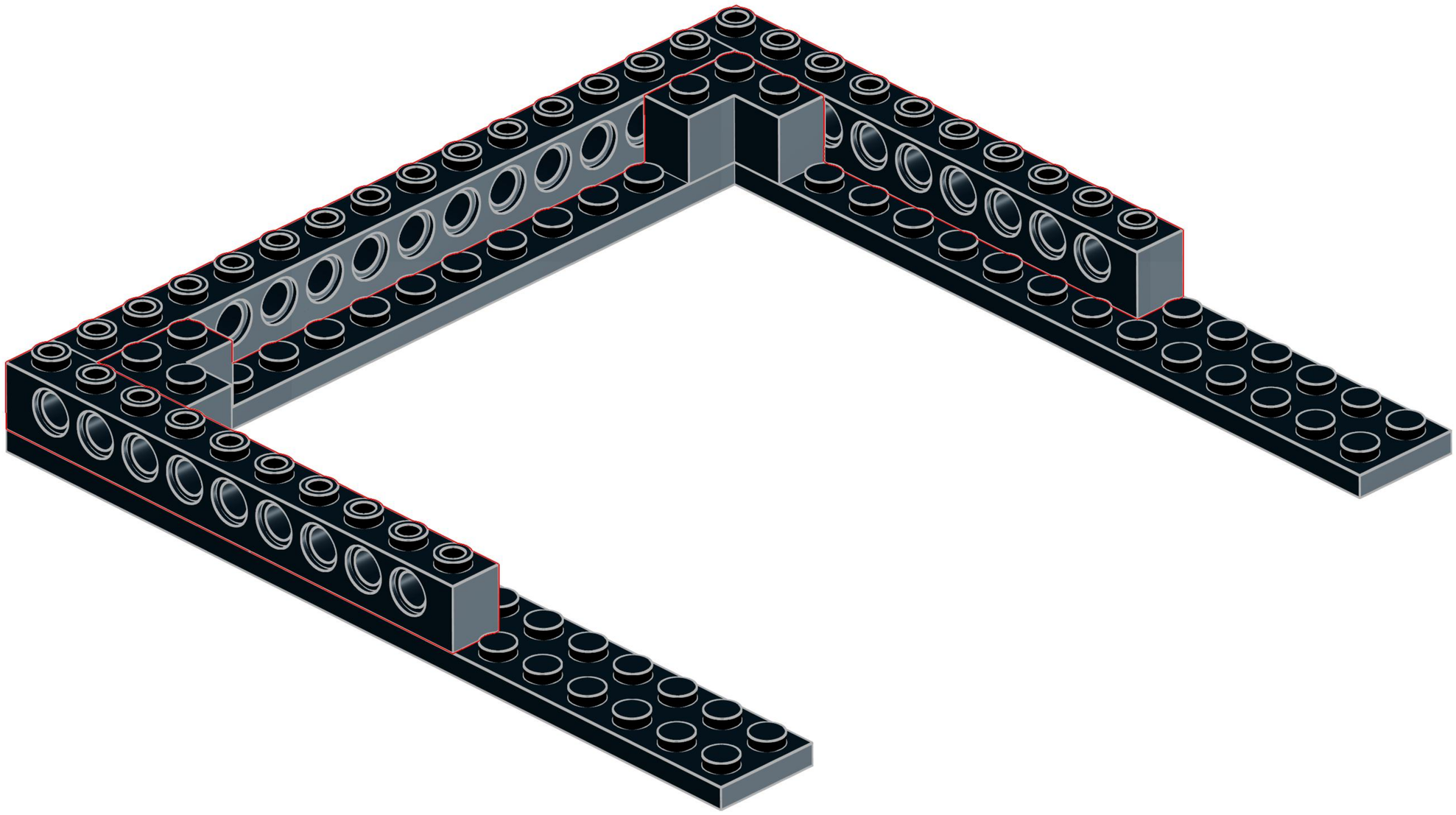

# 3

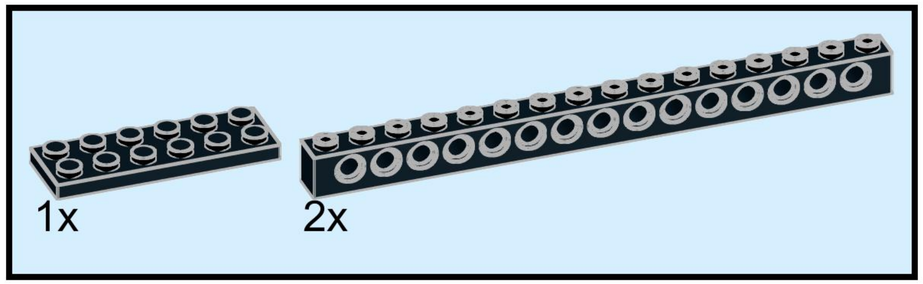


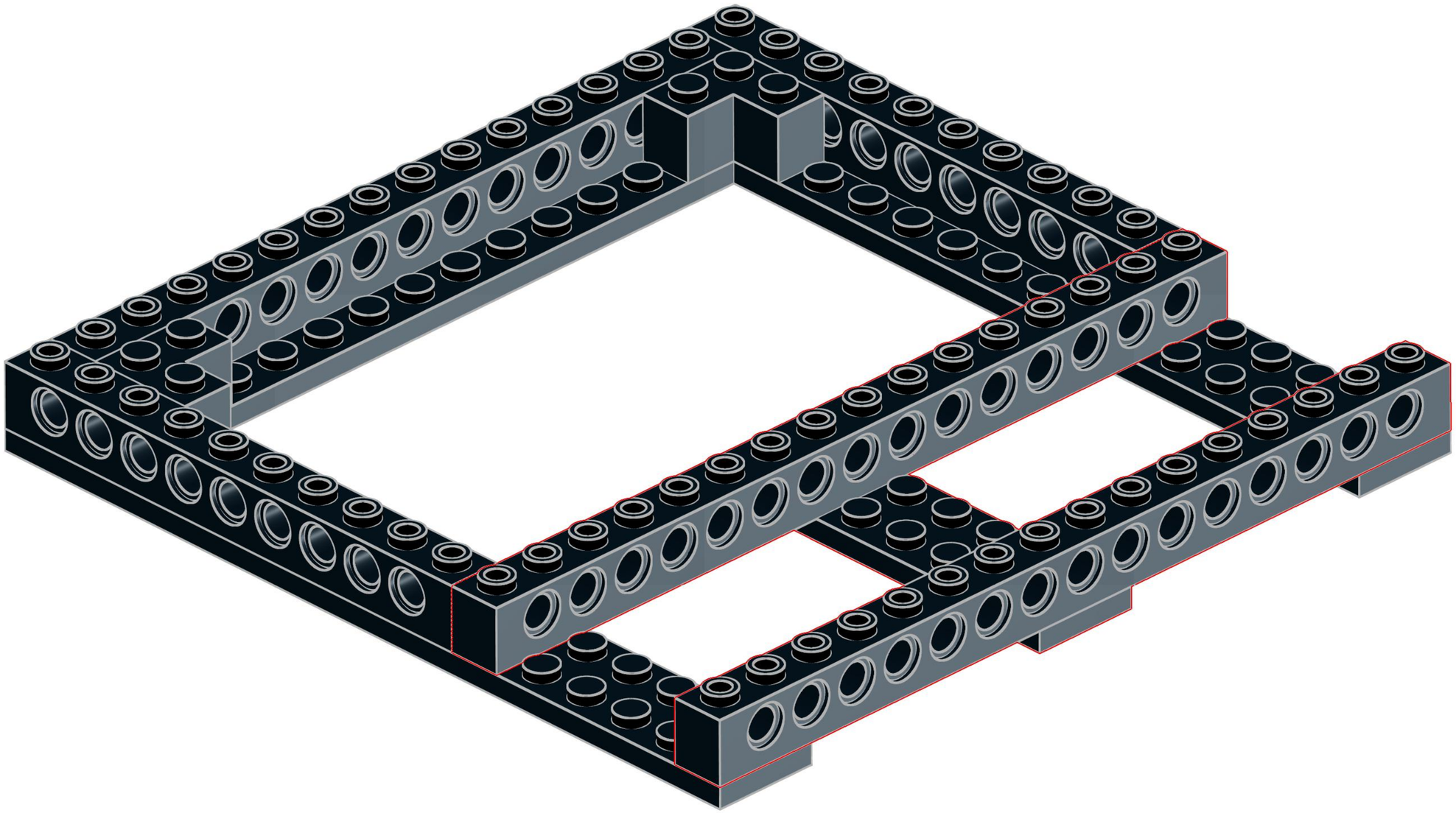

# 4

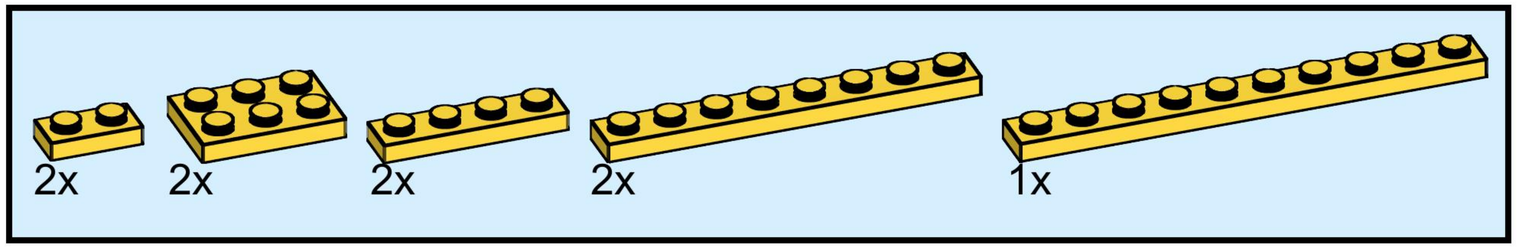


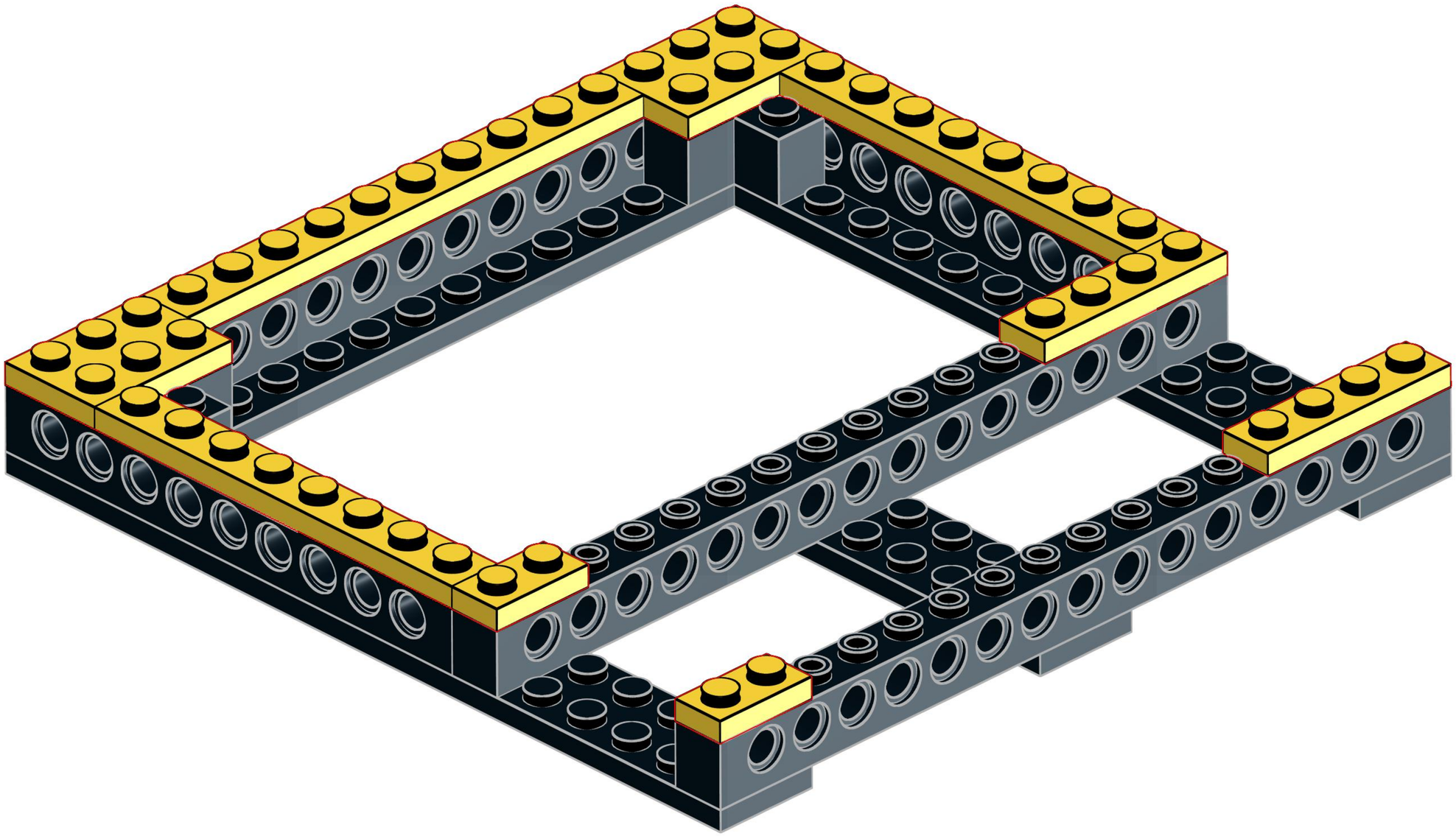

# 5

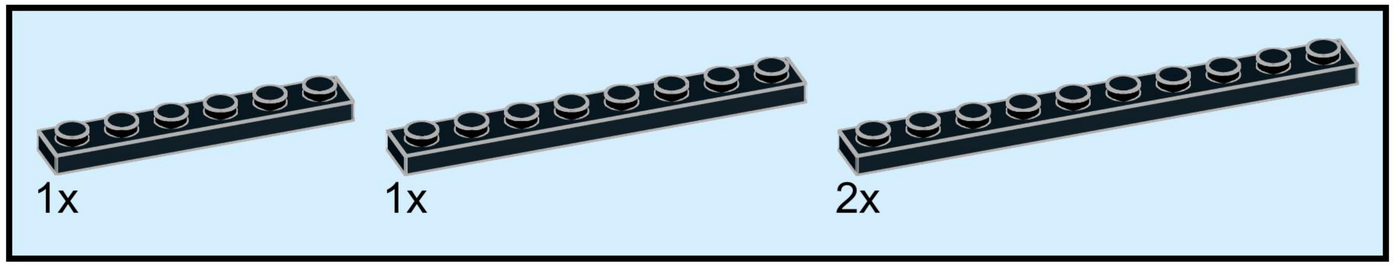


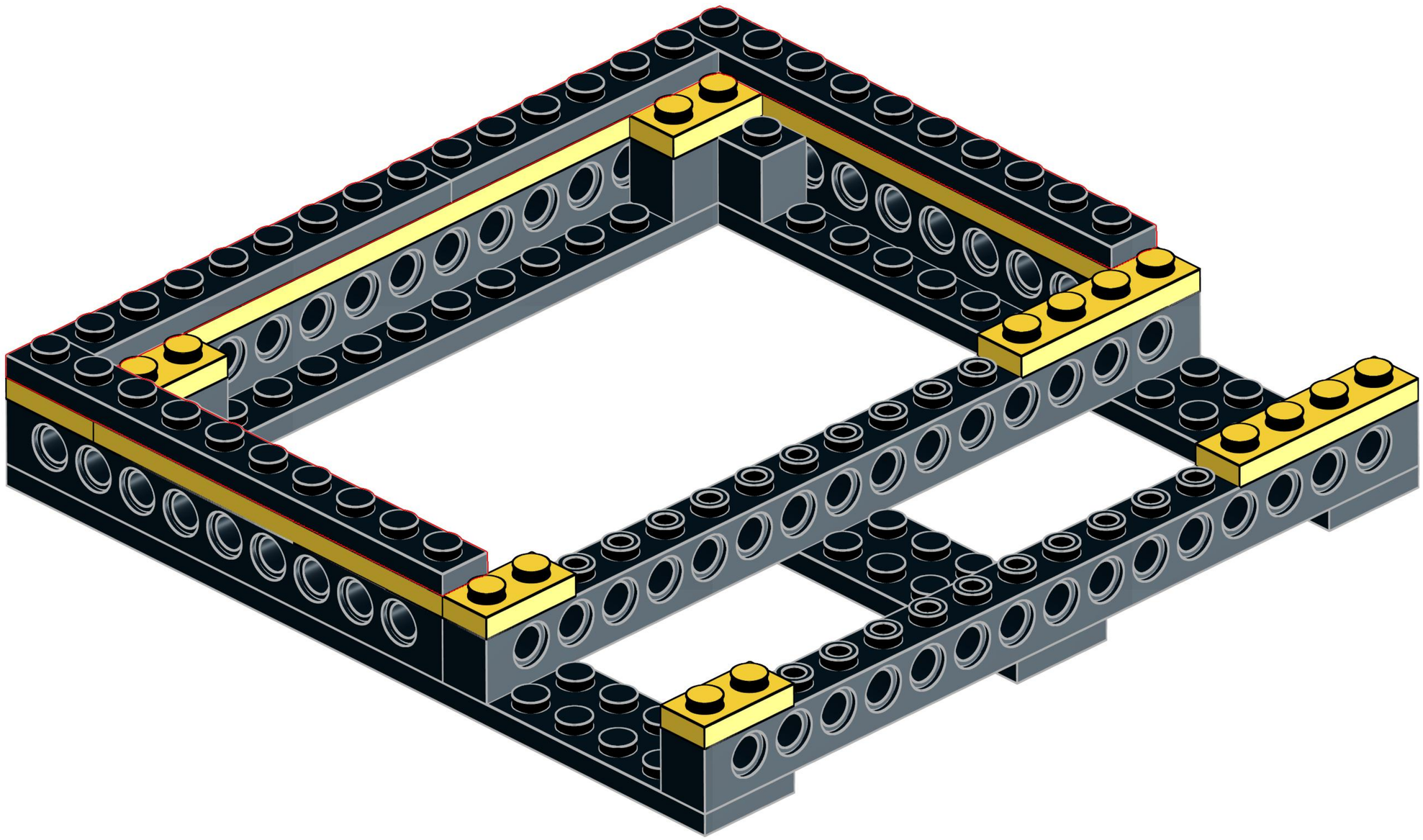

# 6

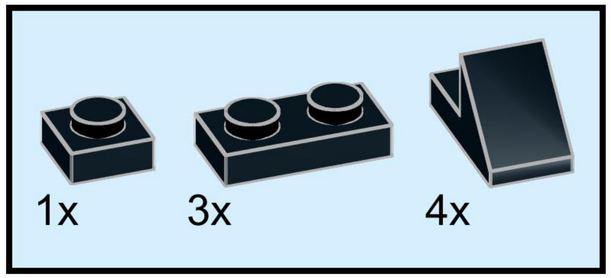


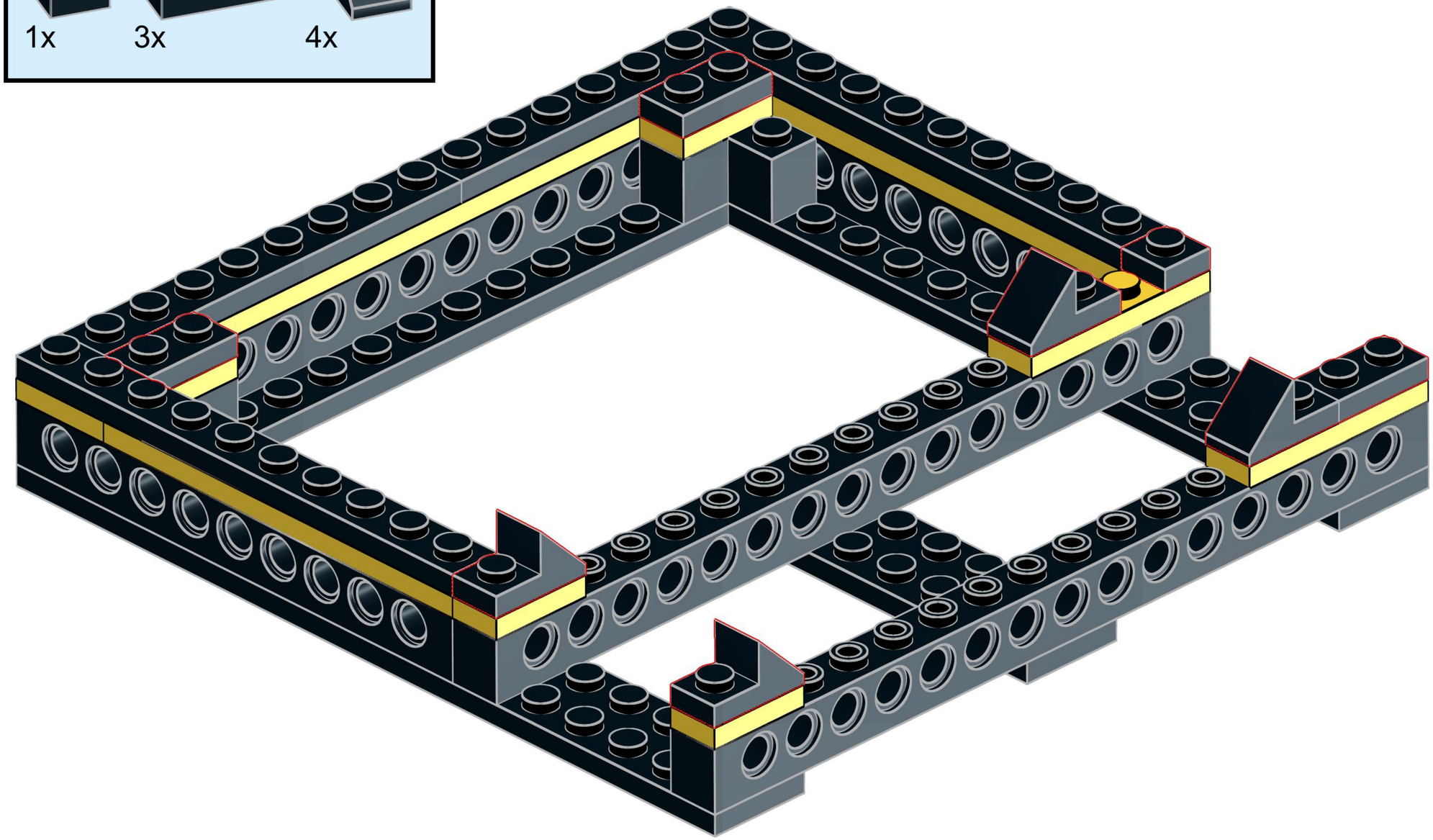

# 7

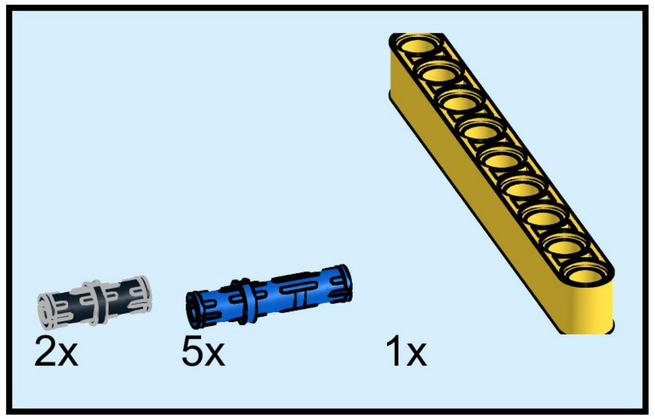


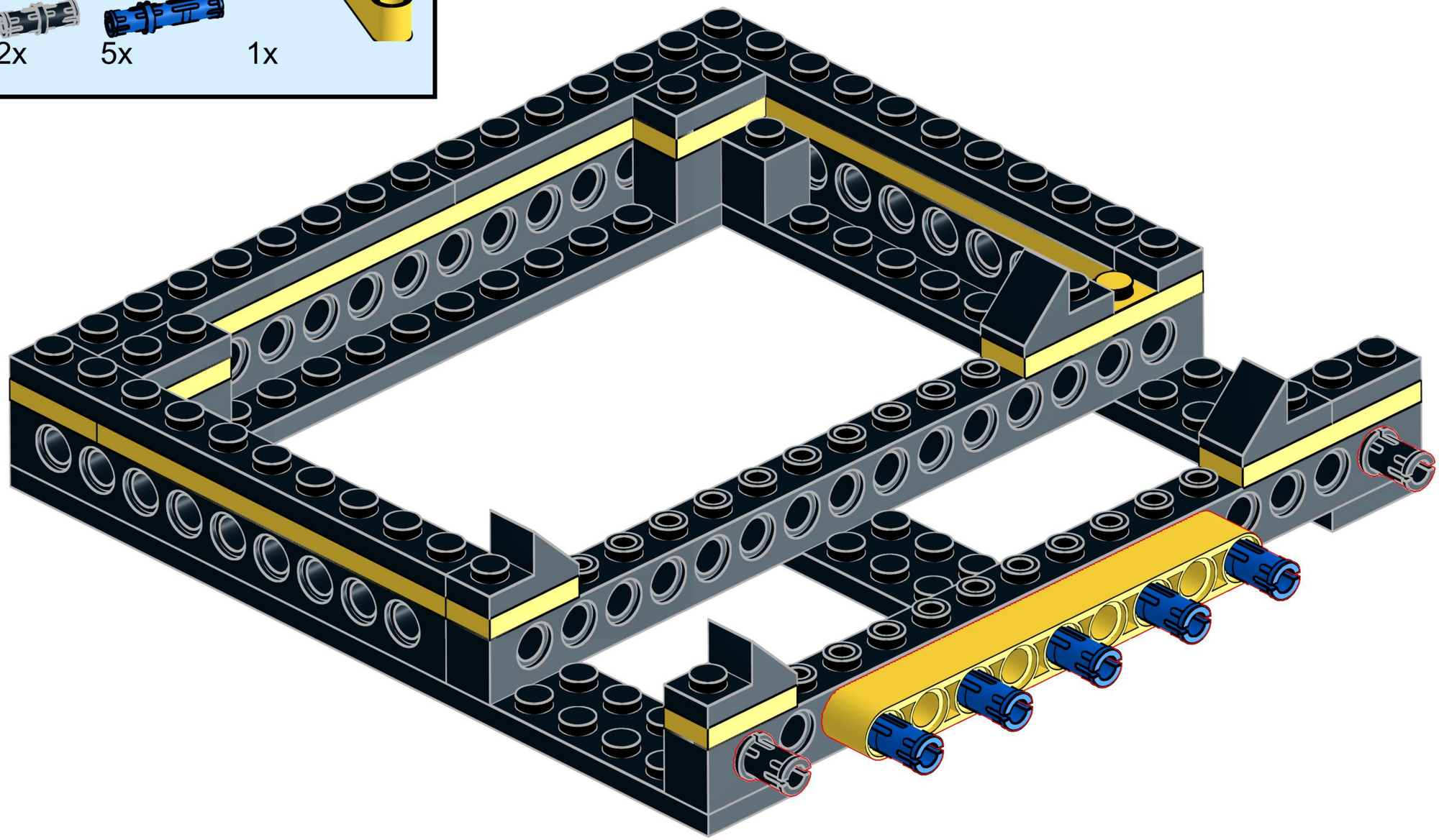

# 8

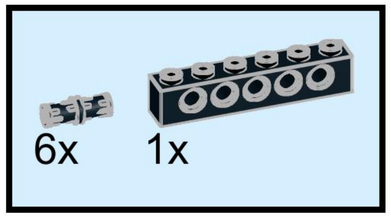


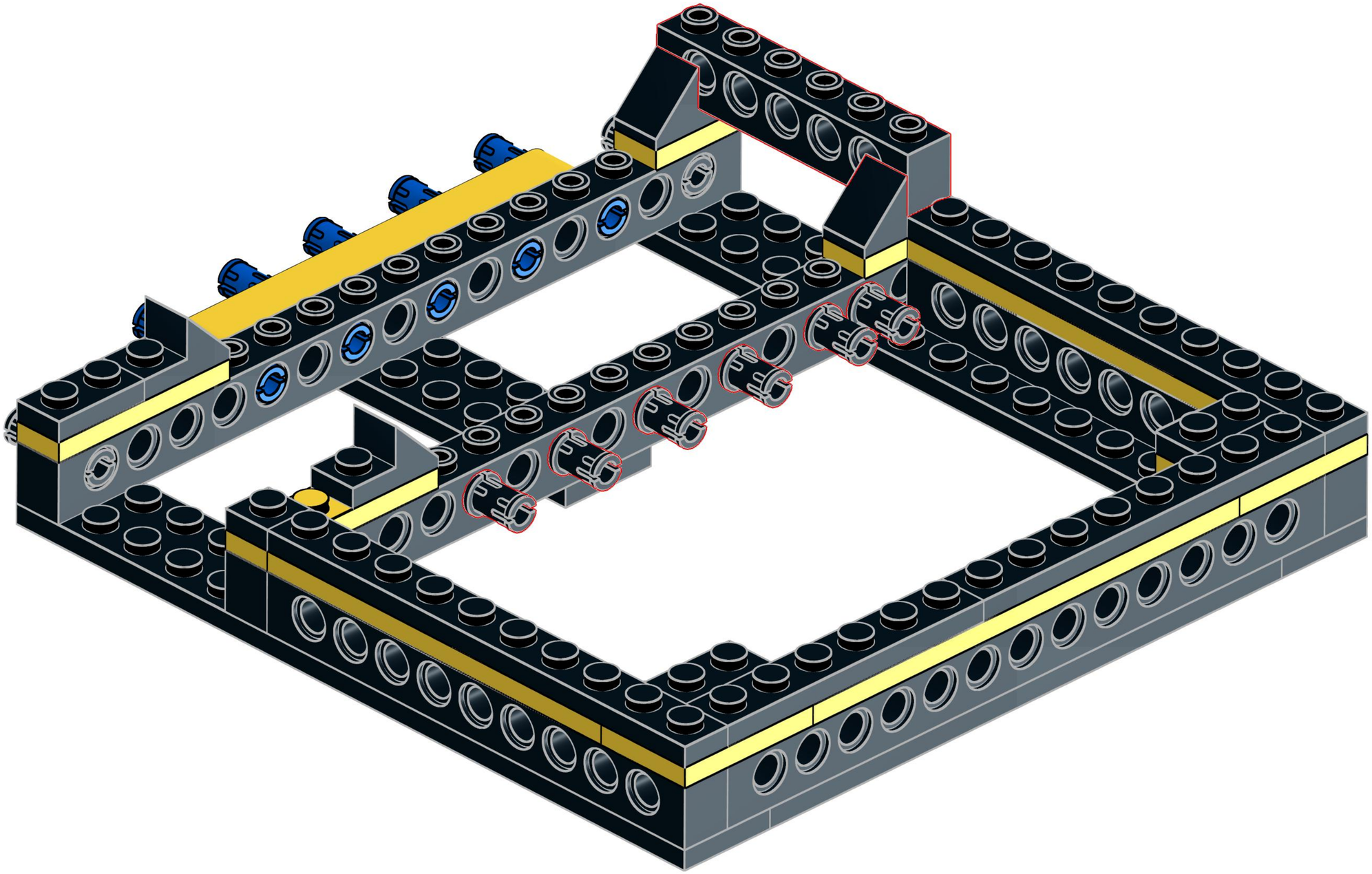

# 9

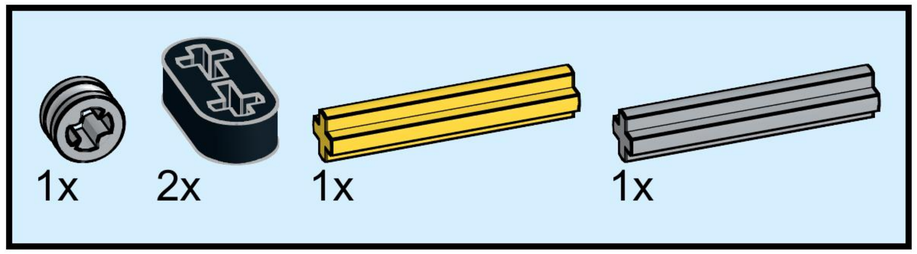


All axles in this assembly are 3L, except the final yellow axle, which is 5L.

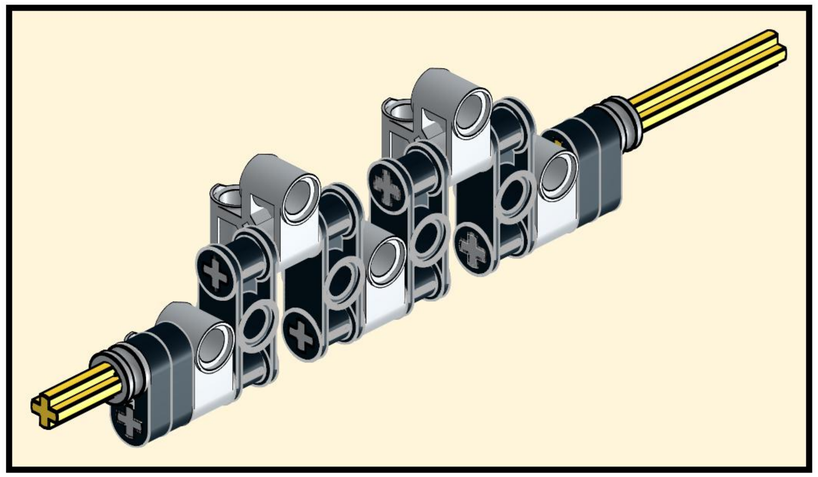

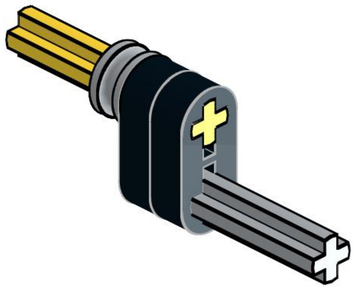

# 10

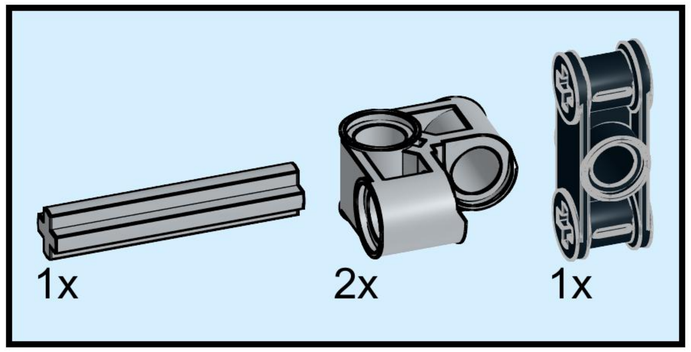


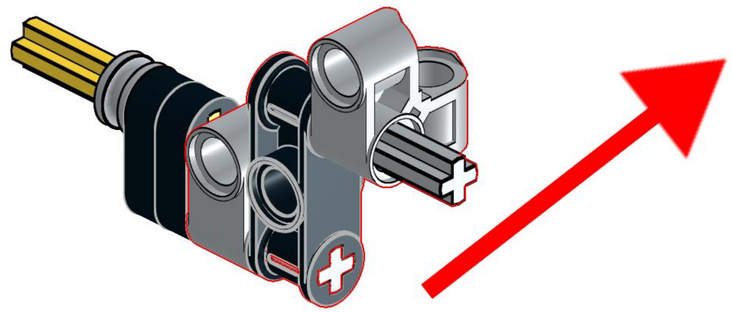

Note the orientation of the 2x2 Bent Technic Cross Blocks.  It is essential that each of these parts in the crank assembly are oriented in the correct direction.

# 11

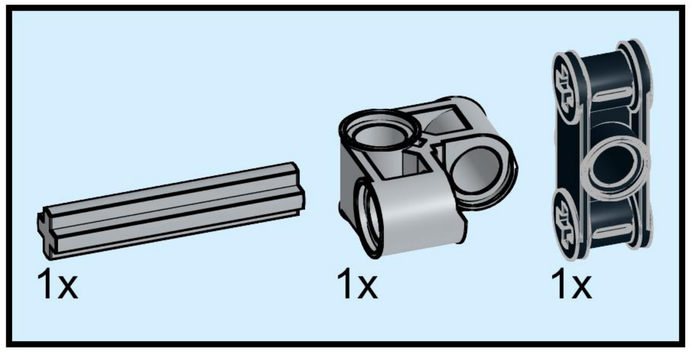


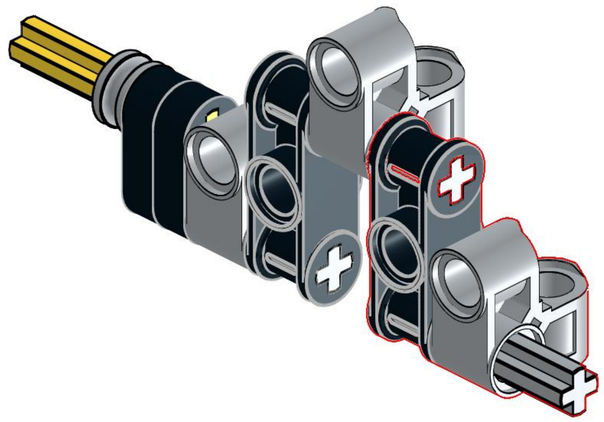

# 12

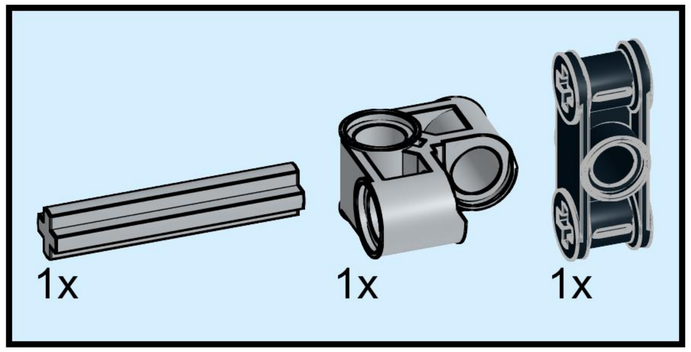

# 13

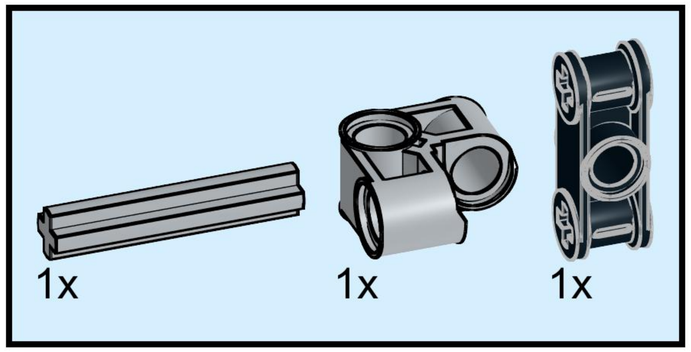


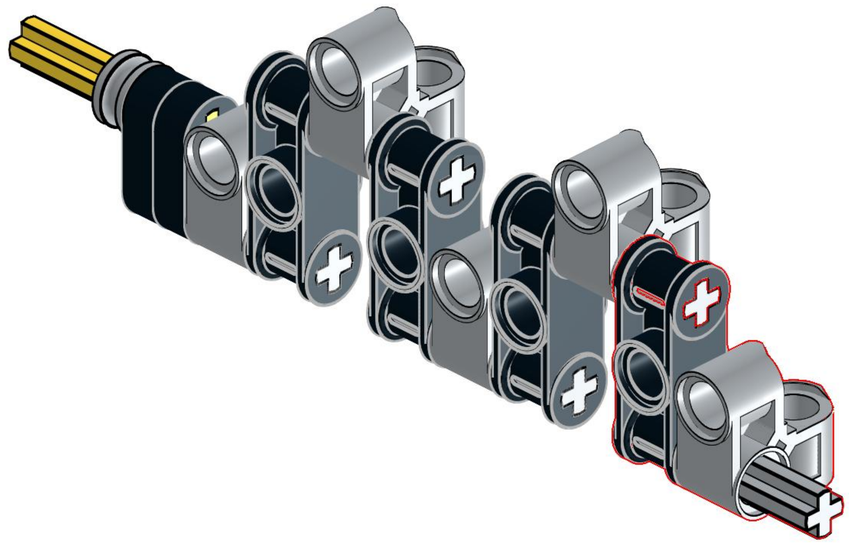

# 14

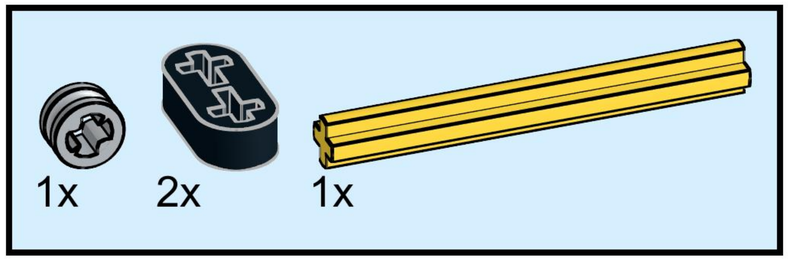


Verify all 5 Grey Cross Blocks are correctly oriented.

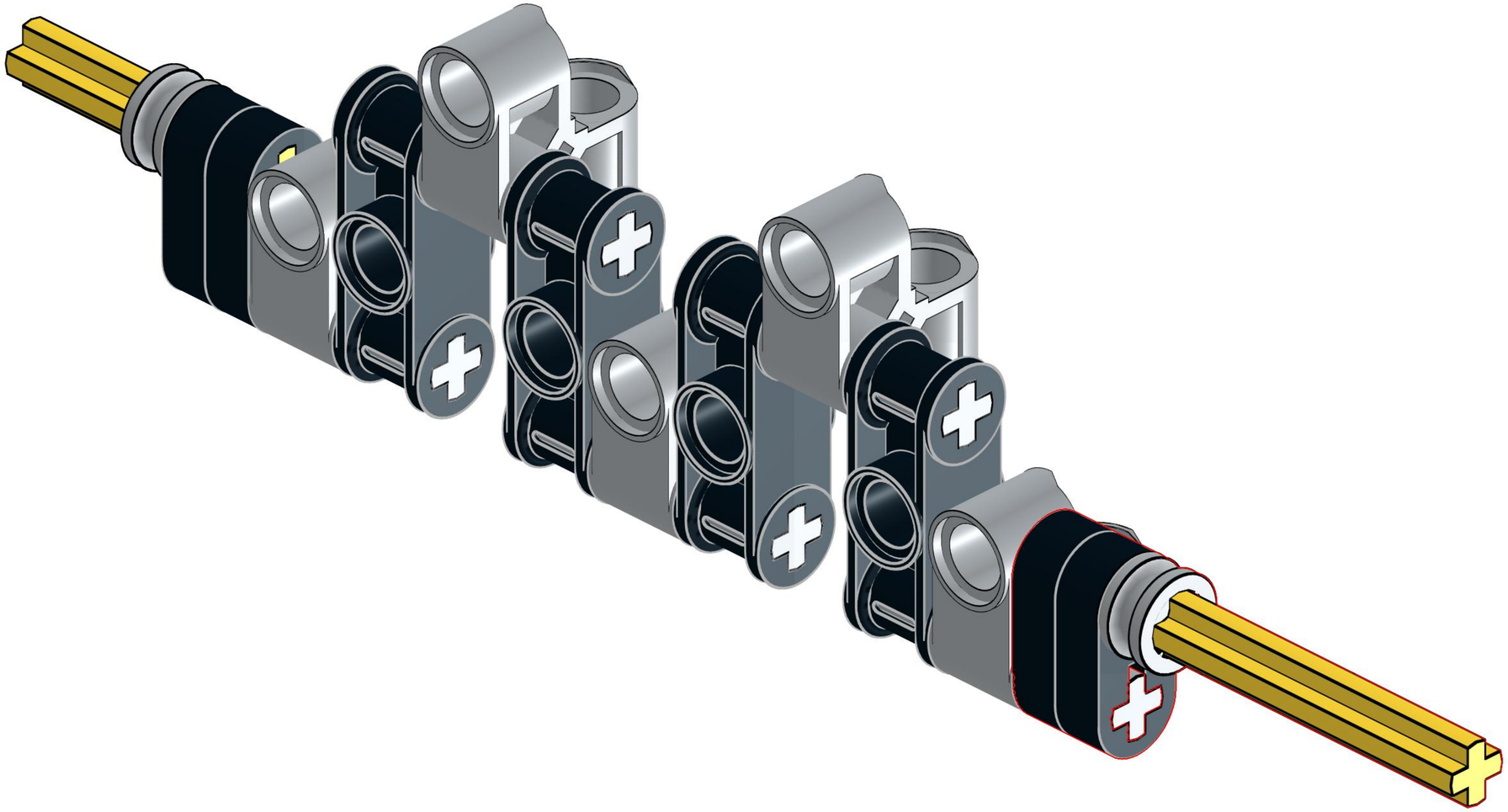

# 15

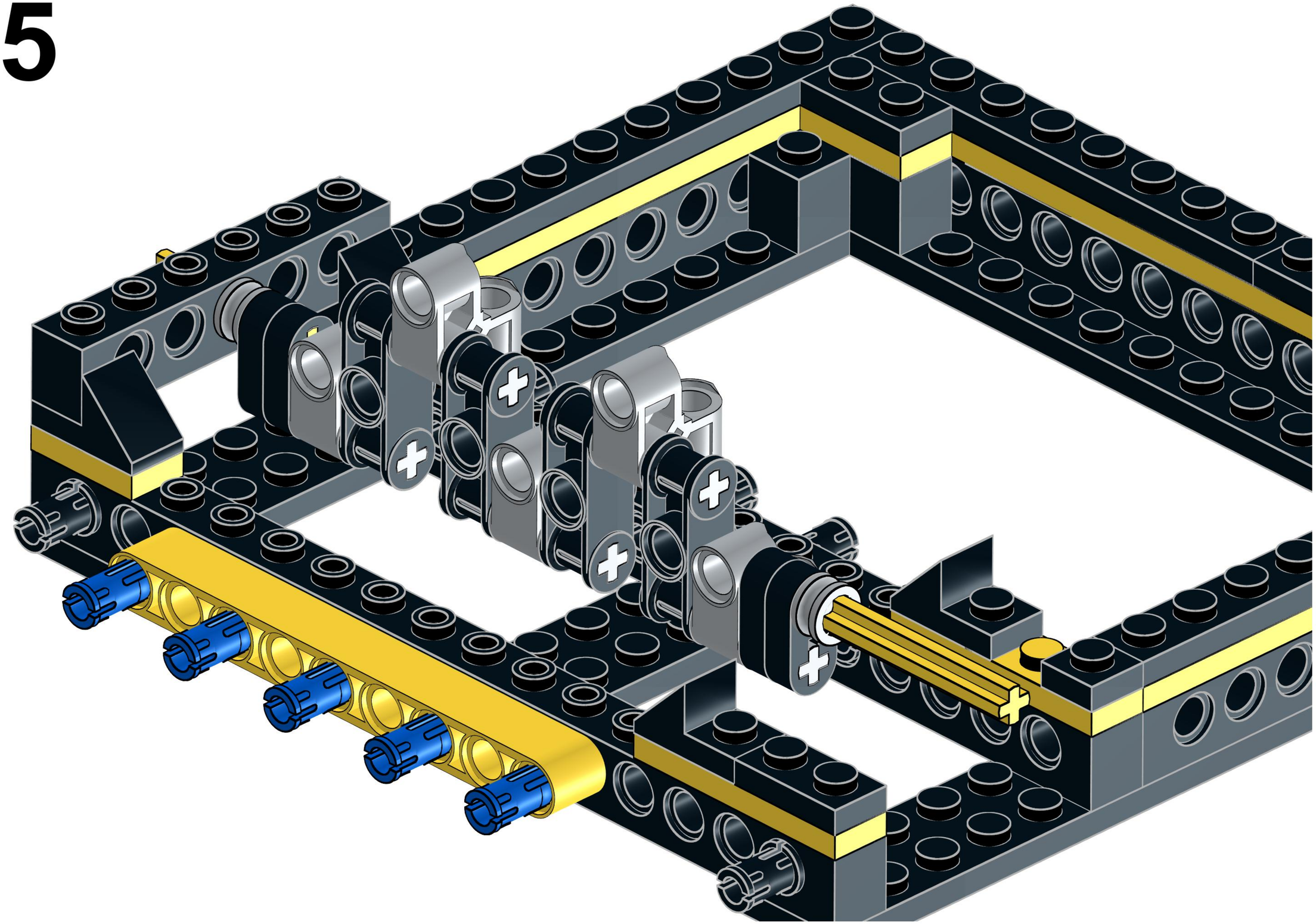

# 16

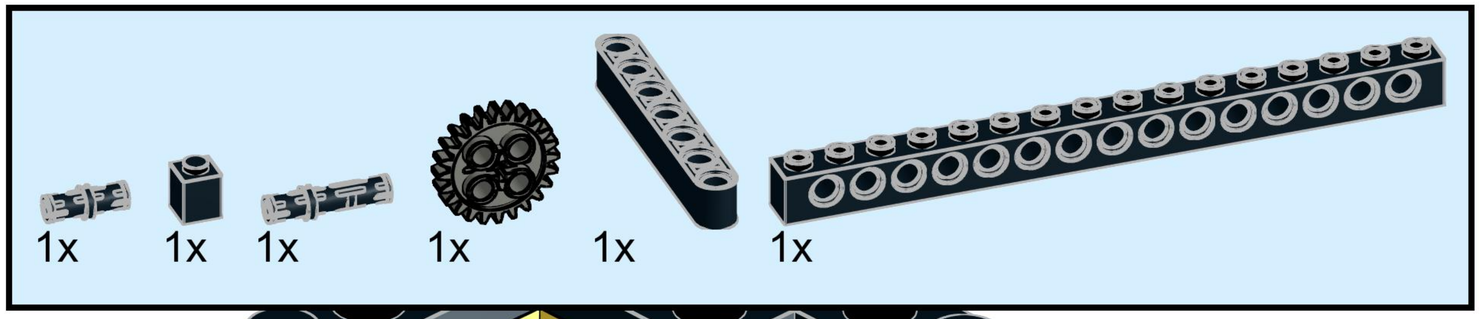


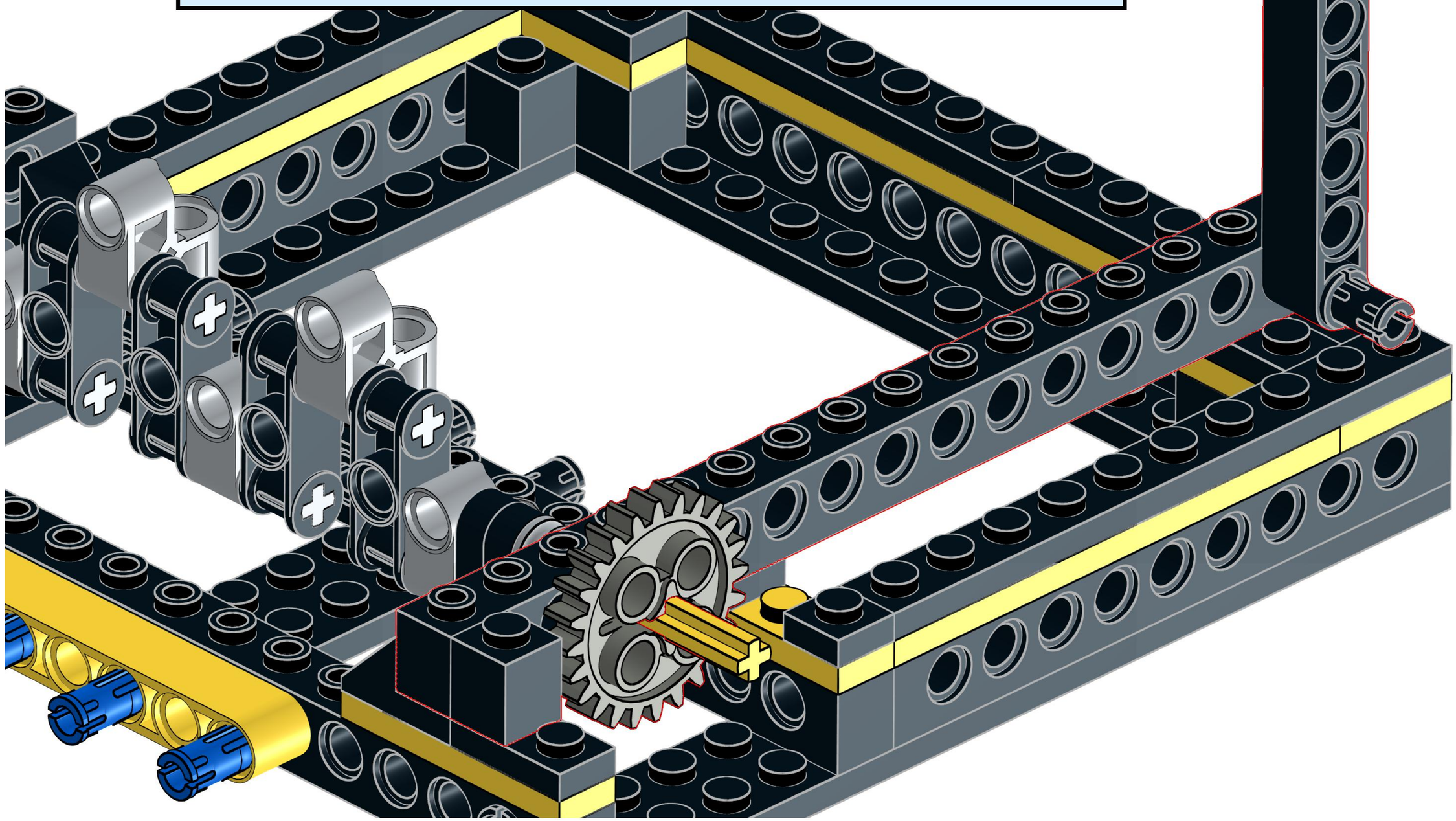

# 17

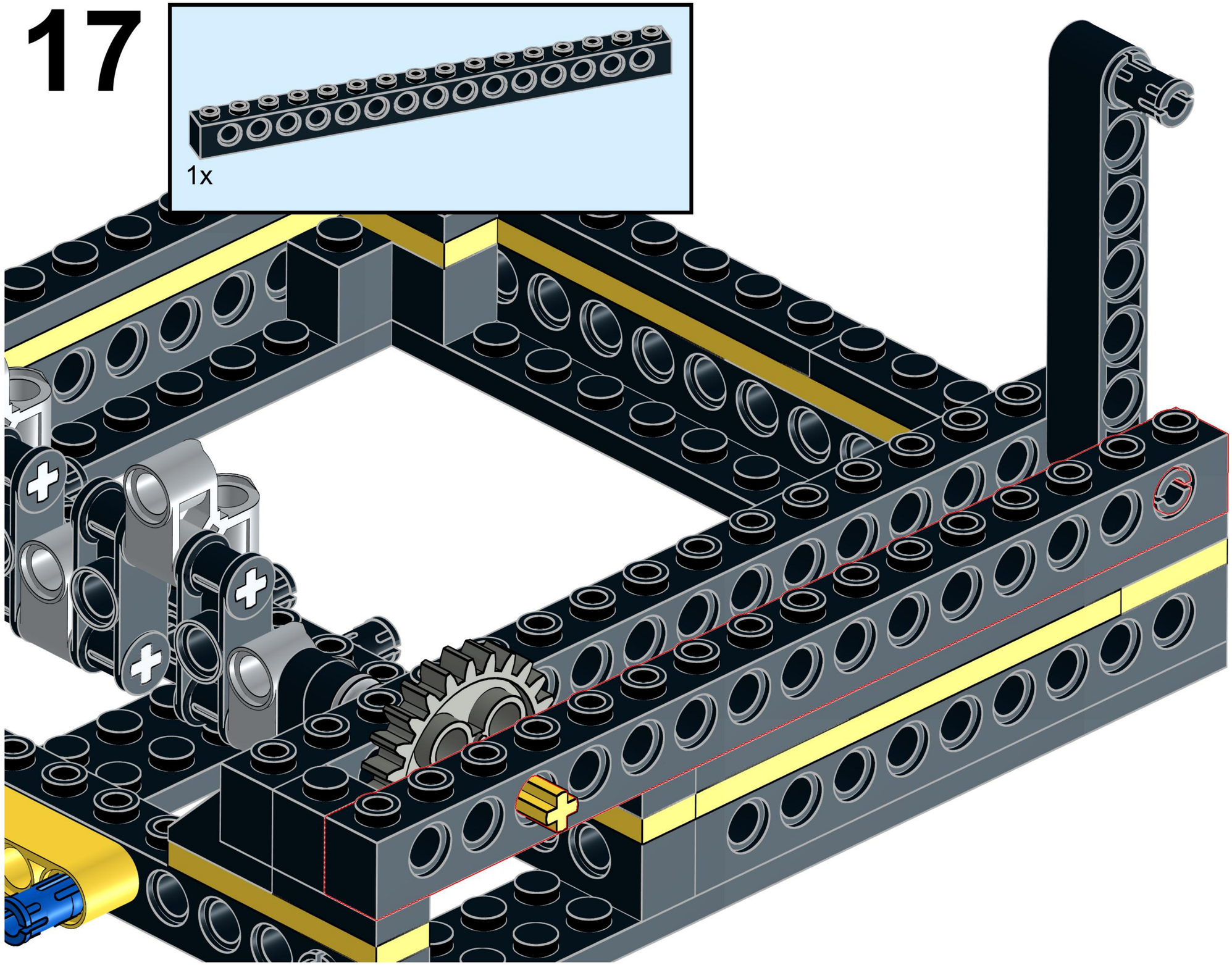

# 18

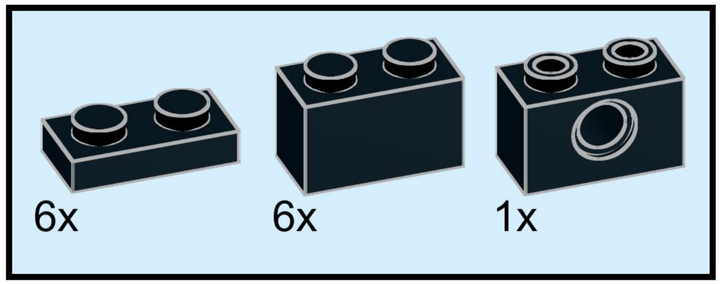


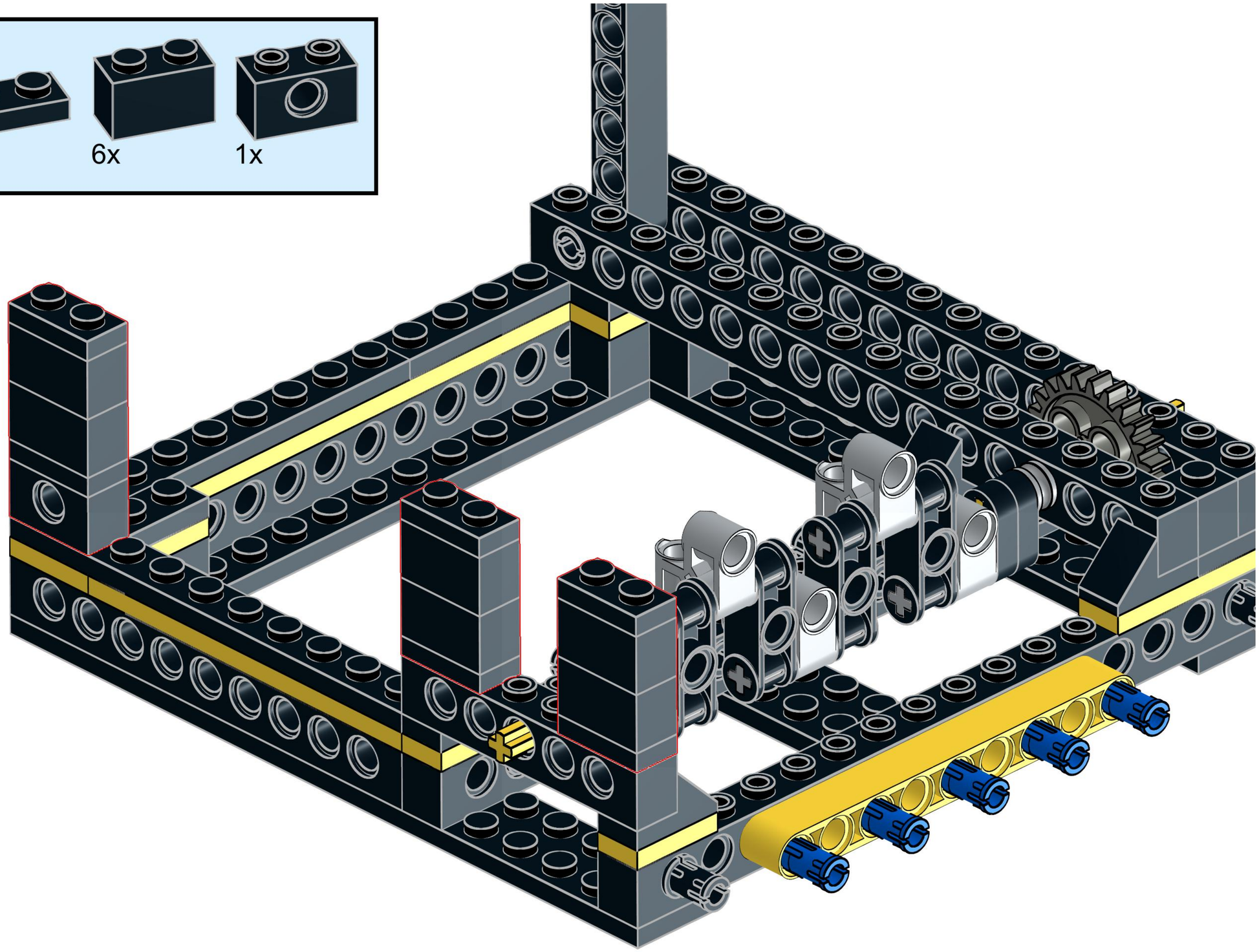

# 19




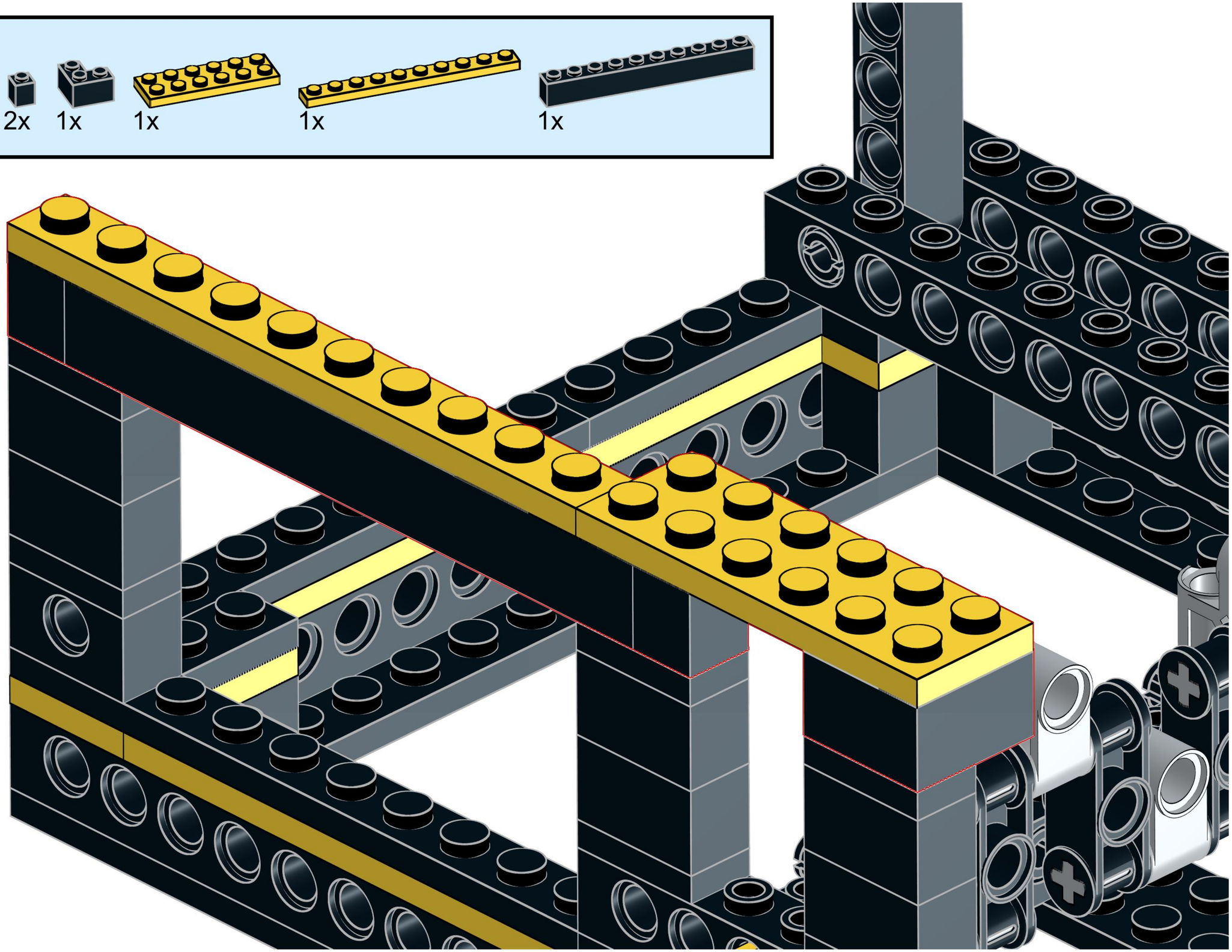

# 20

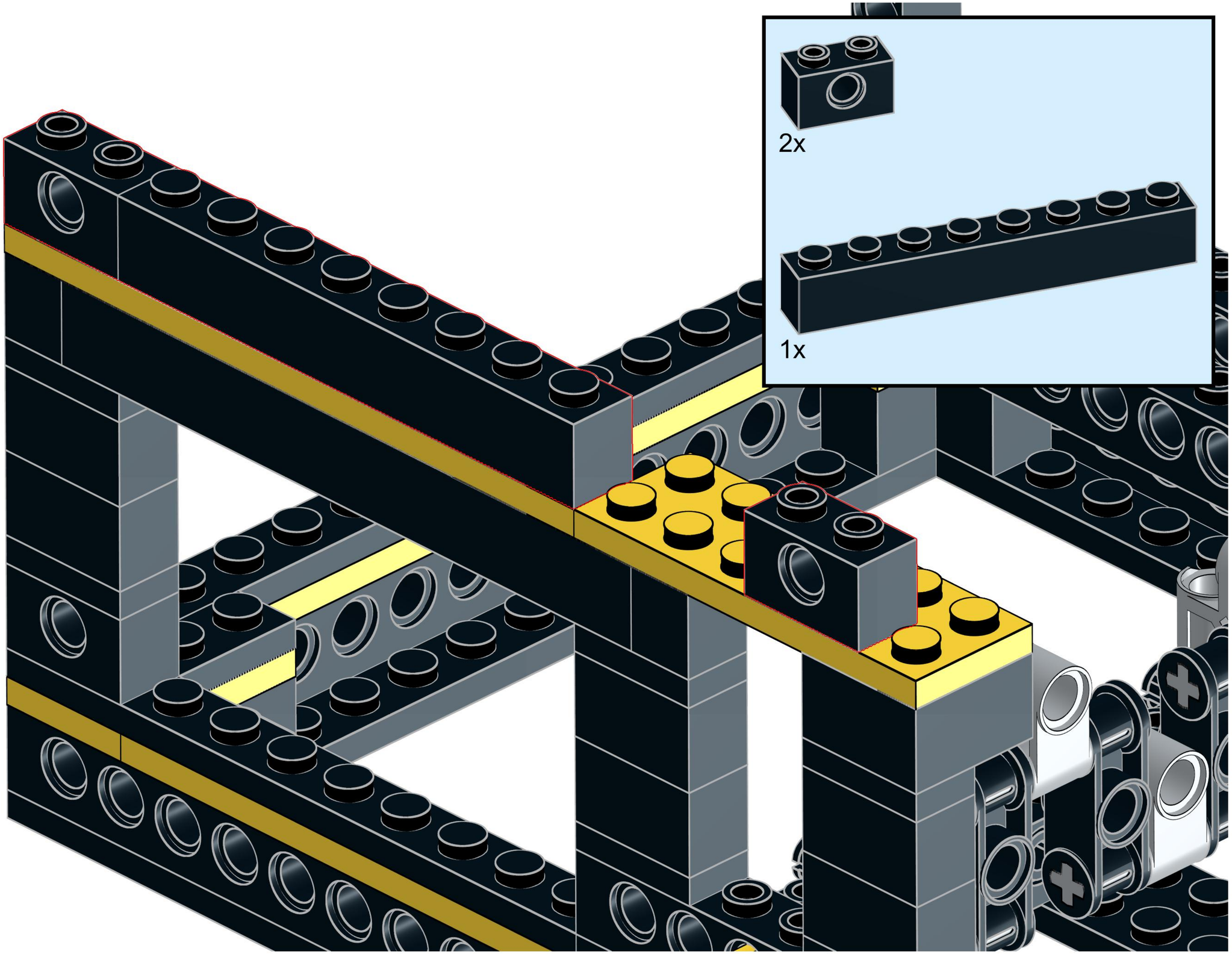

# 21

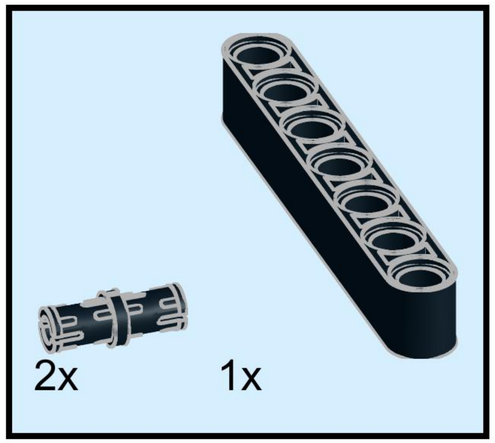


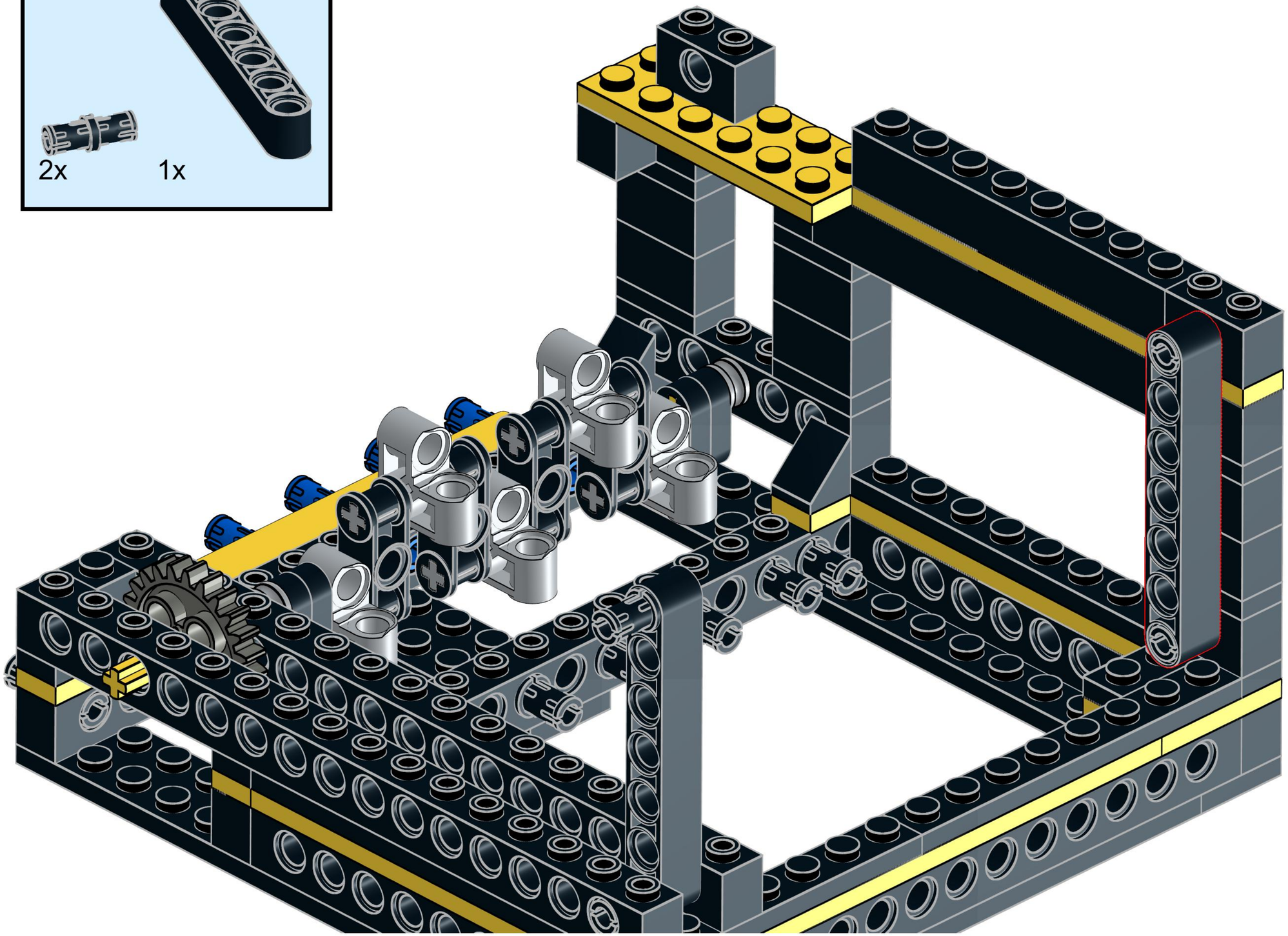

# 22

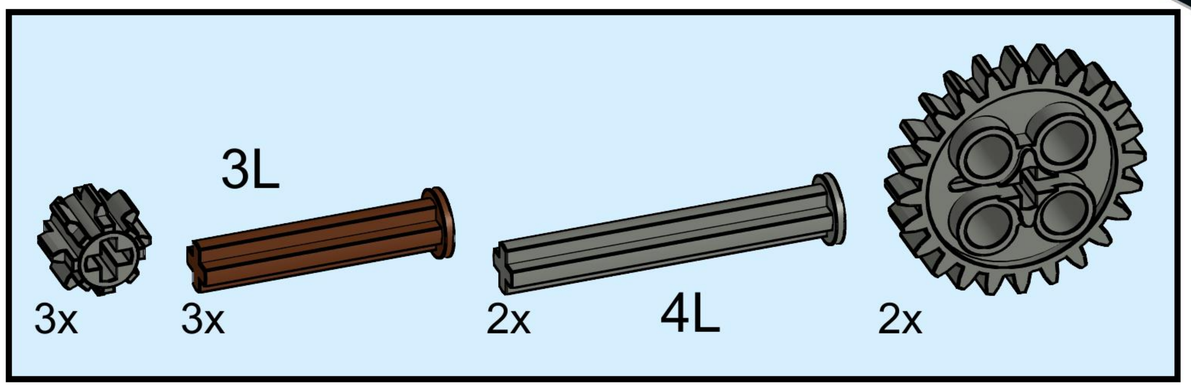

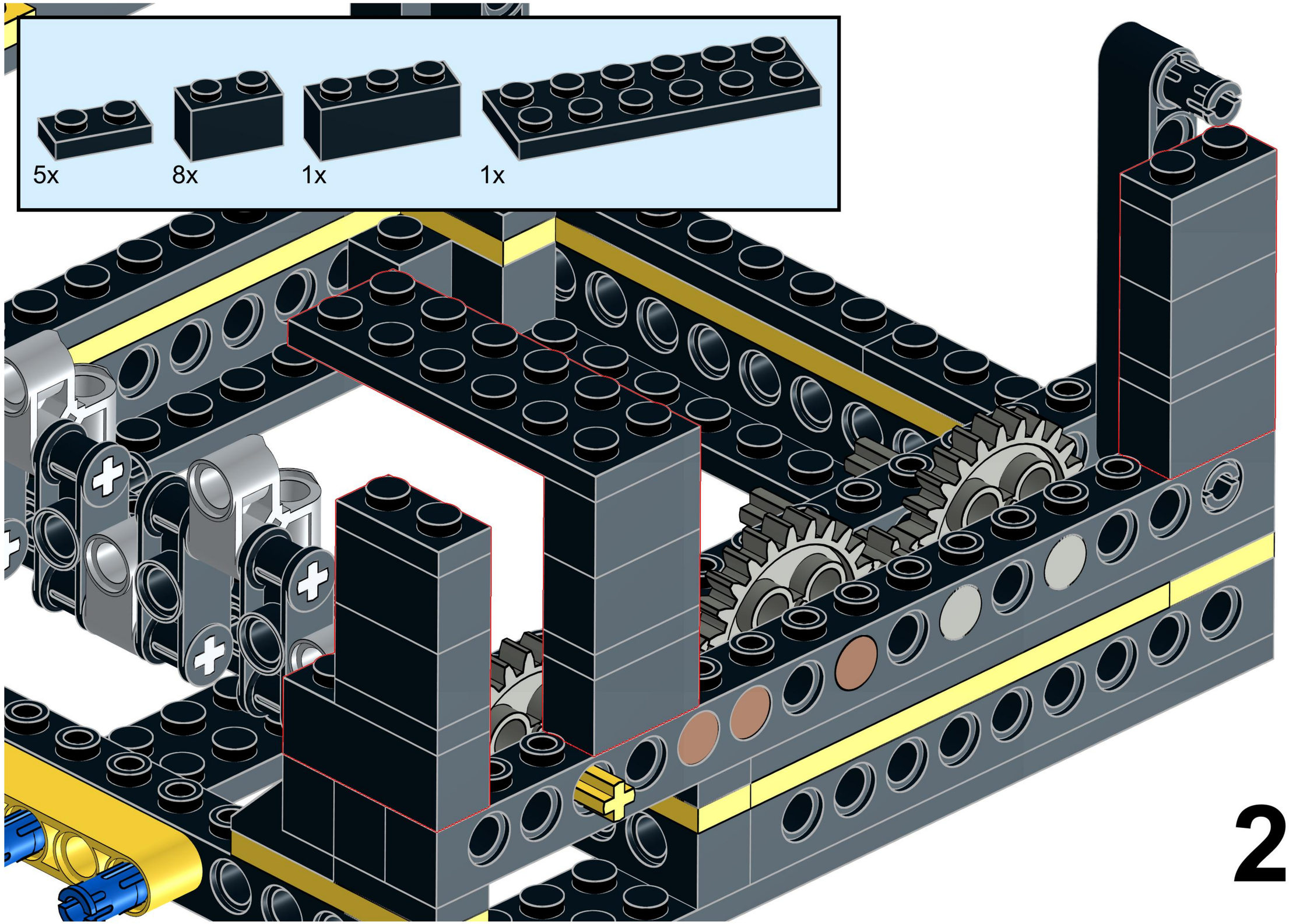
5x
8x
1x
1x

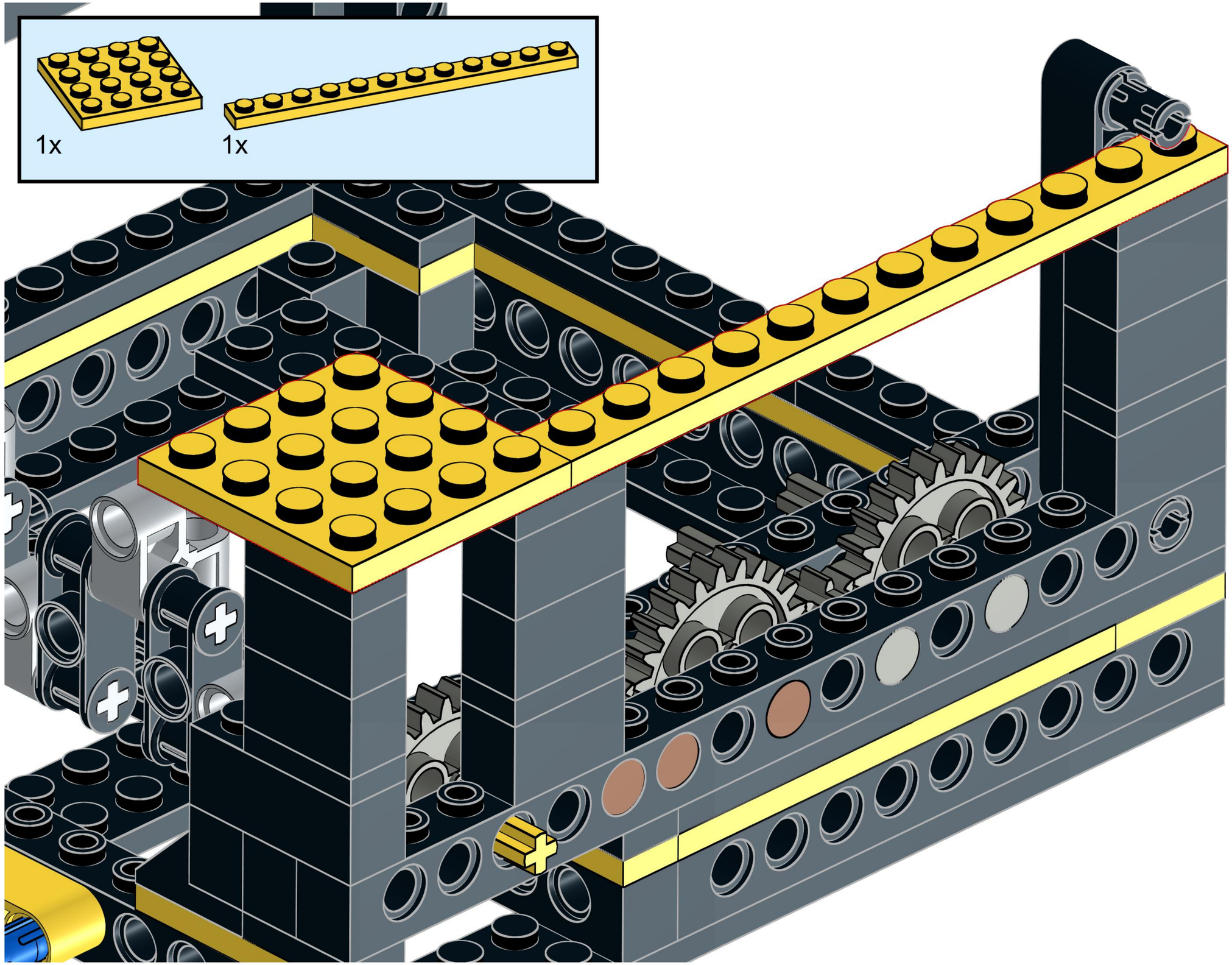
1x
1x

# 25

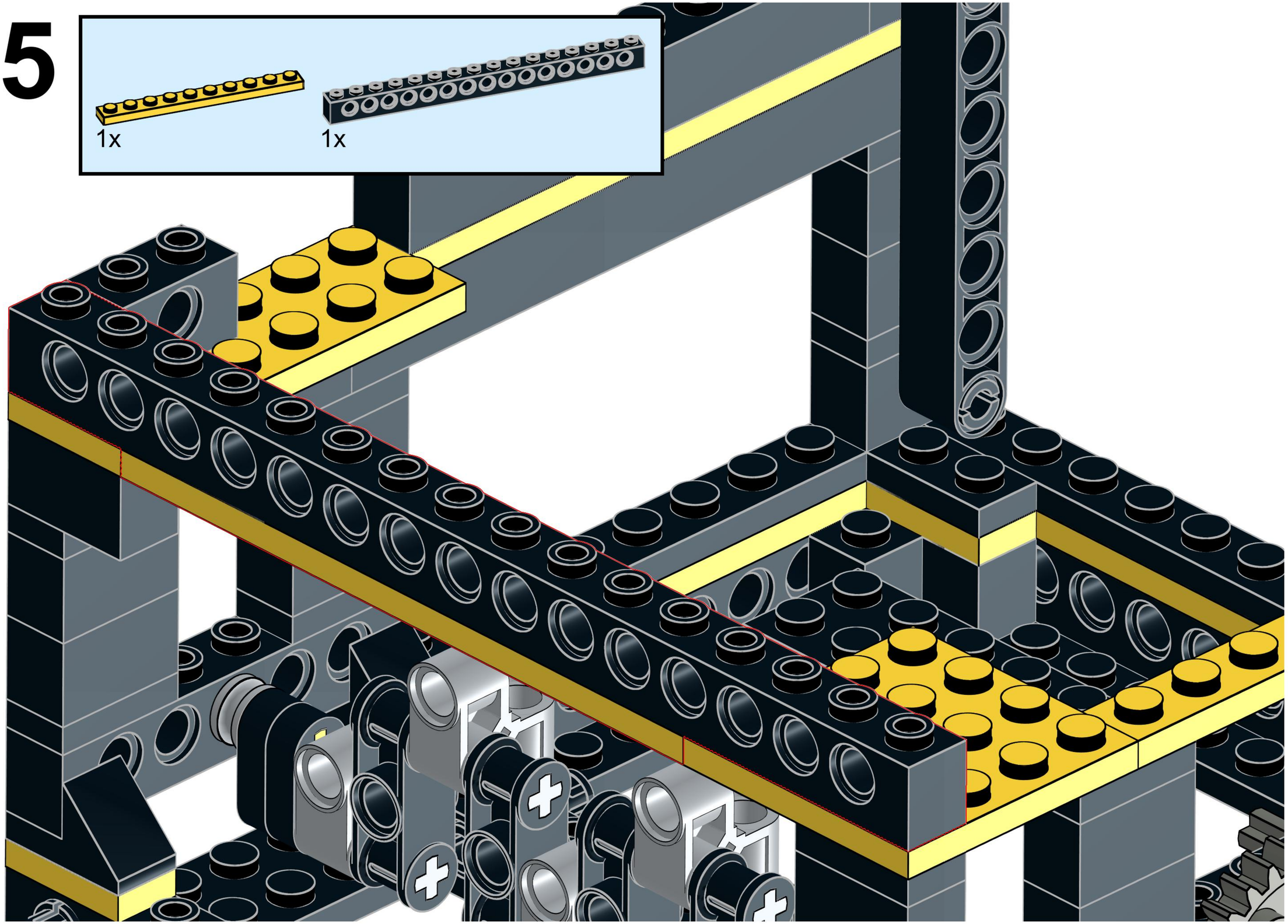

# 26

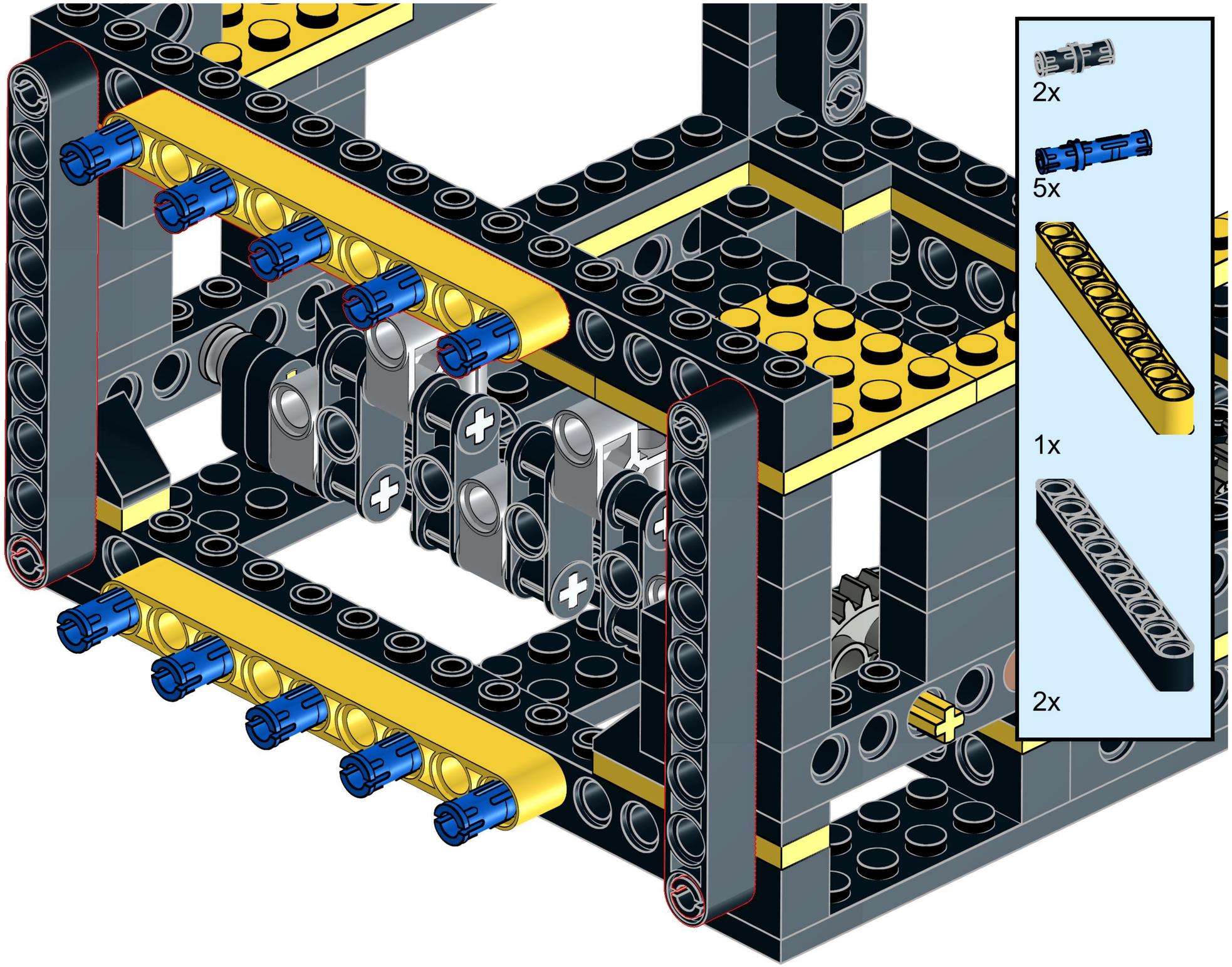

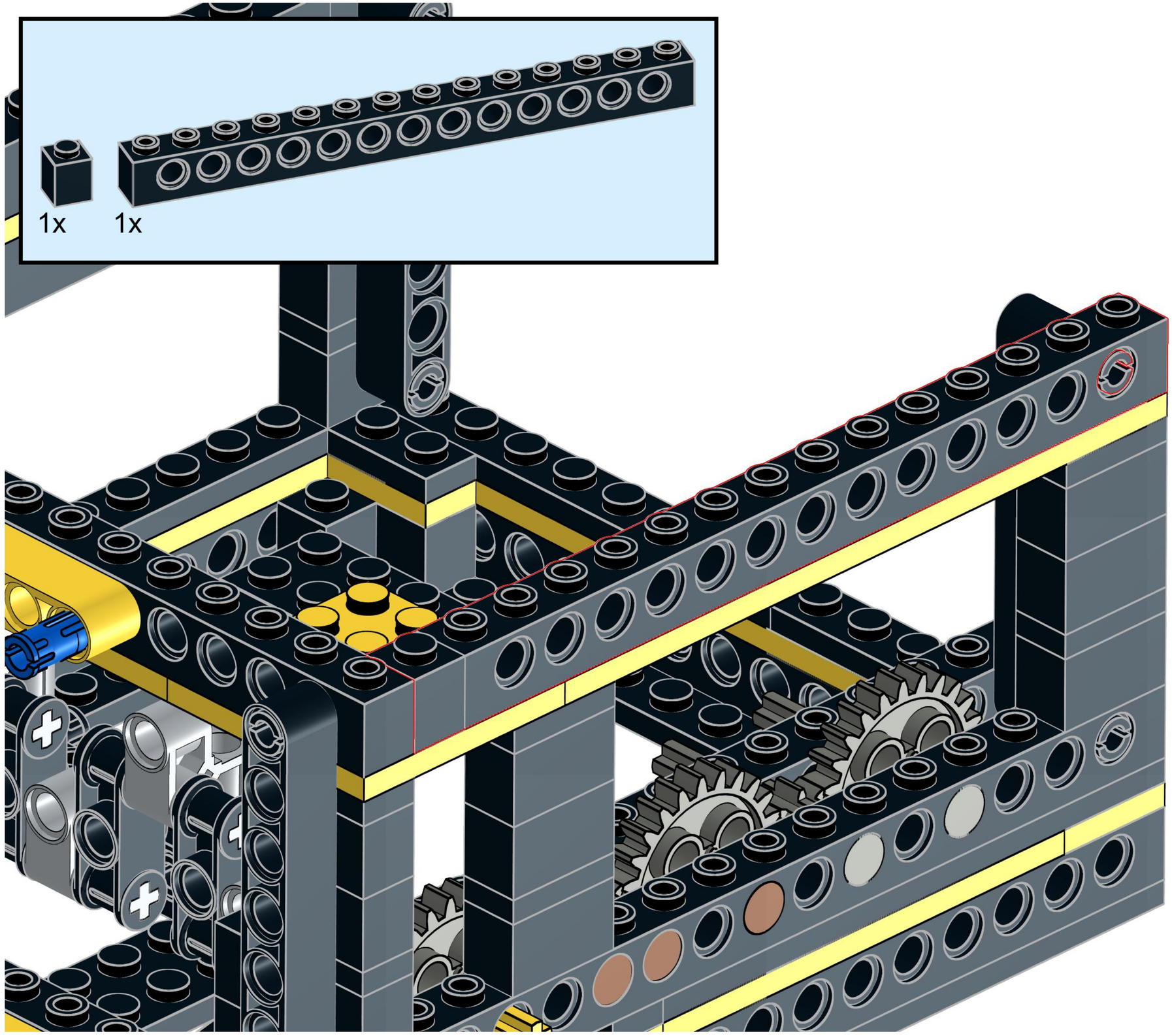
1x
1x

# 28

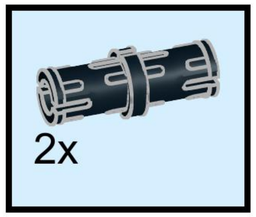


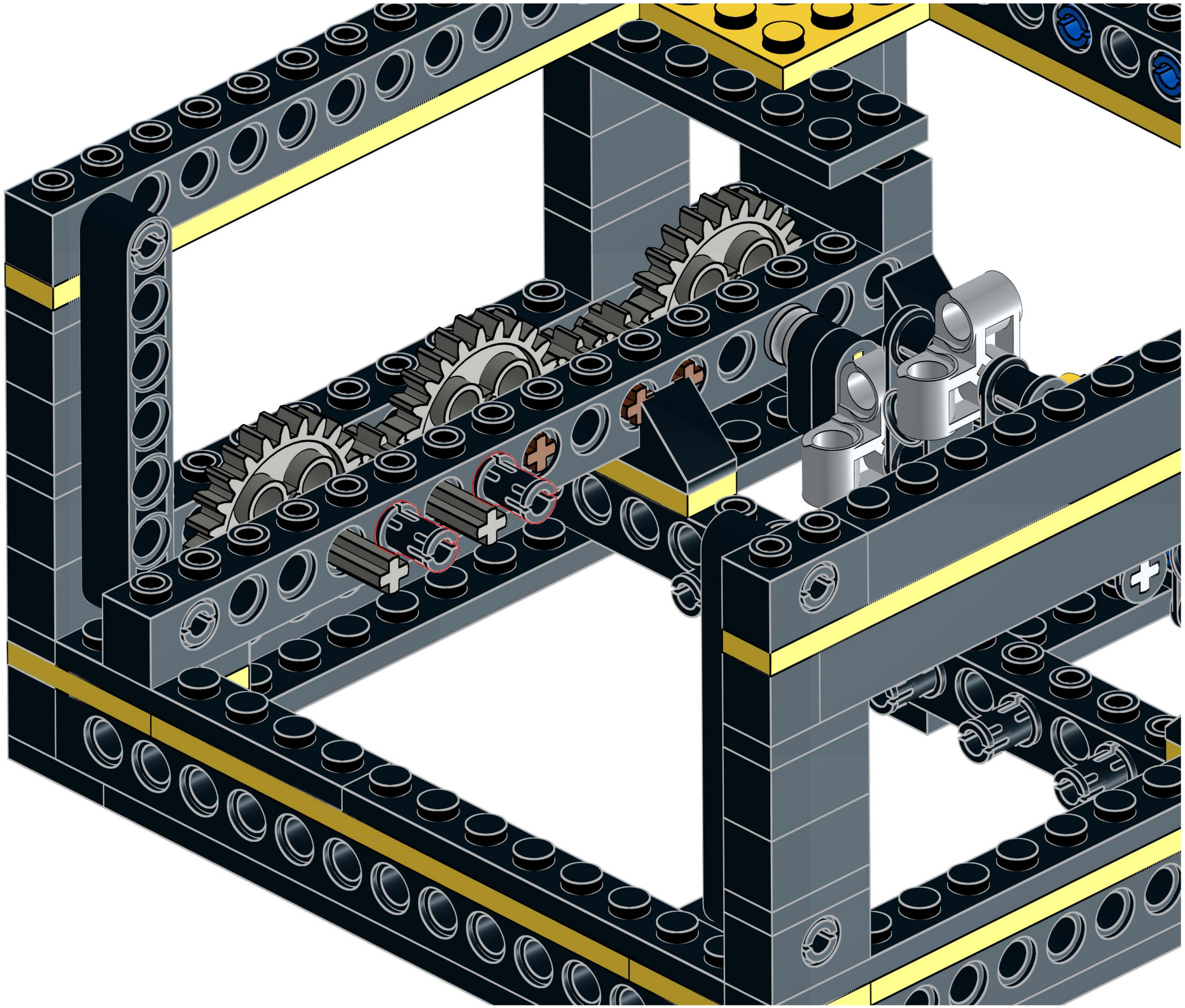

# 29

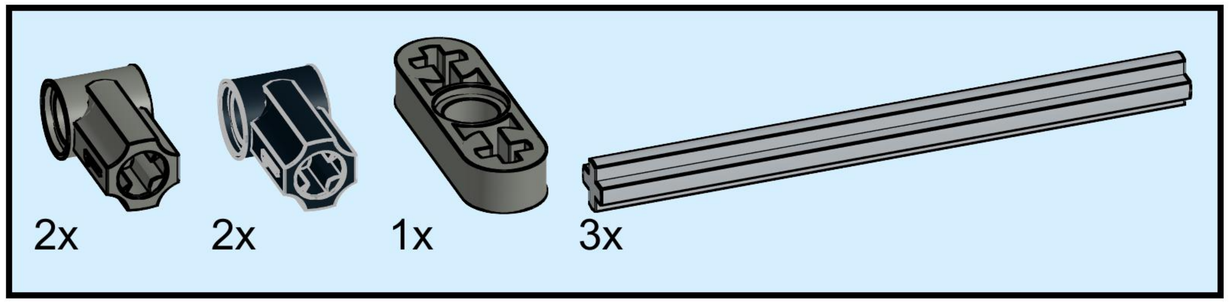


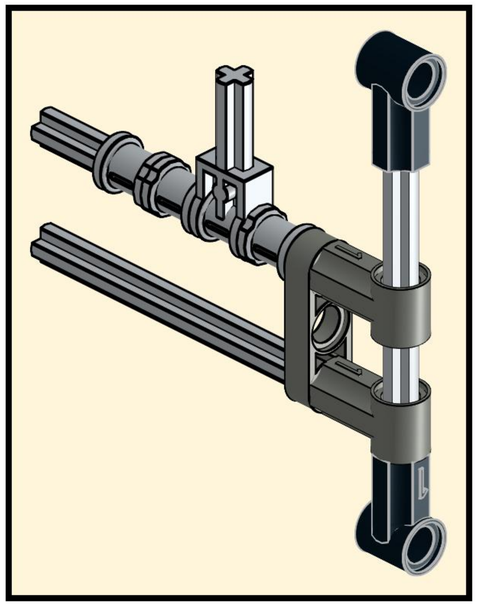

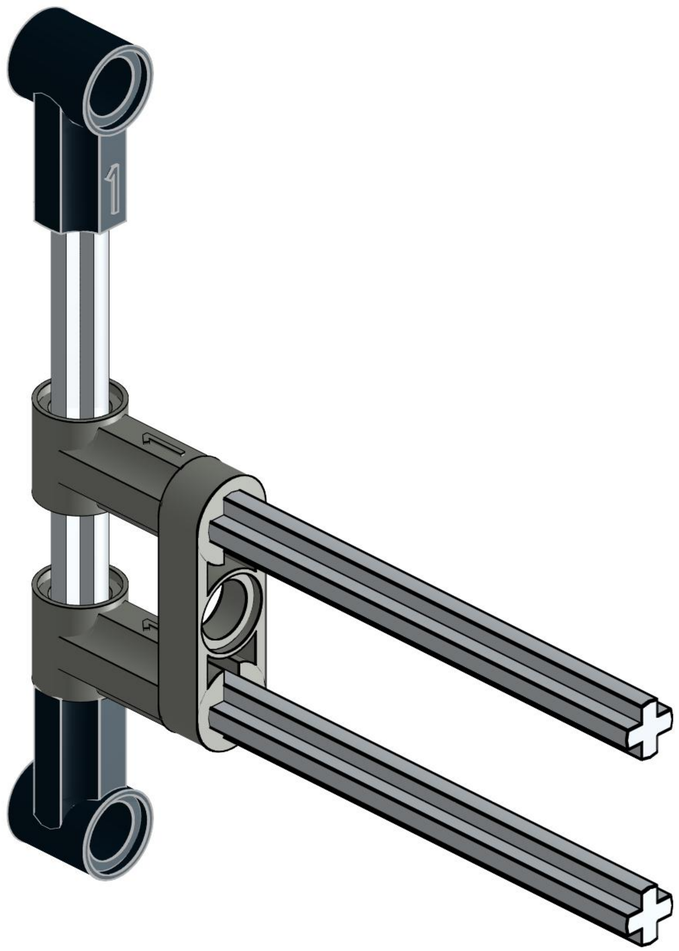

Five (5) of these assemblies will constructed and installed into the drive shaft in an identical manner.  All Axles are 7L.

# 30

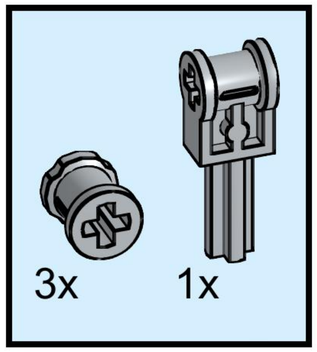


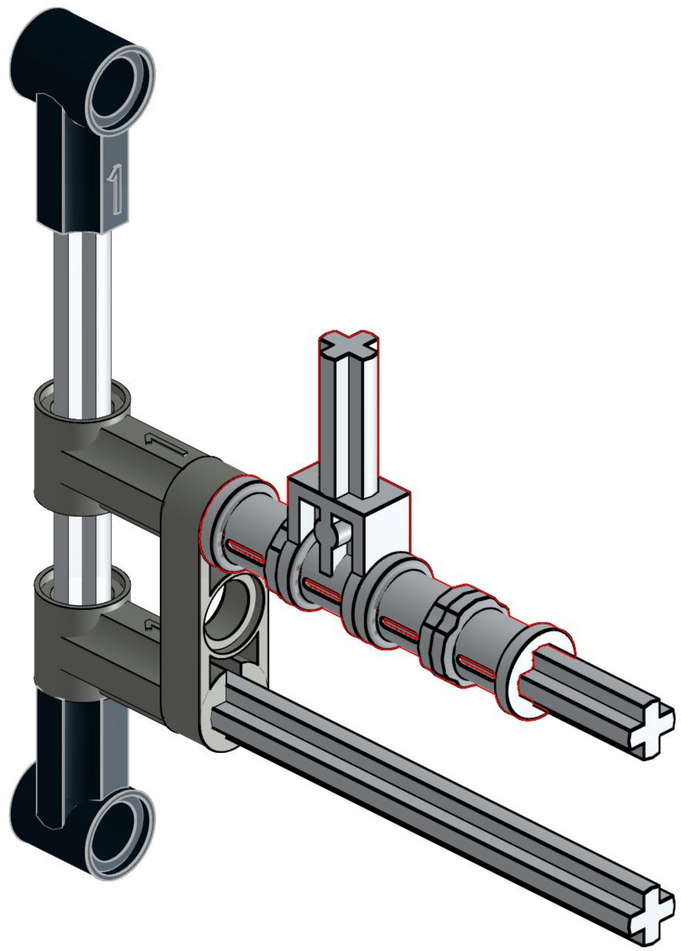

# 31

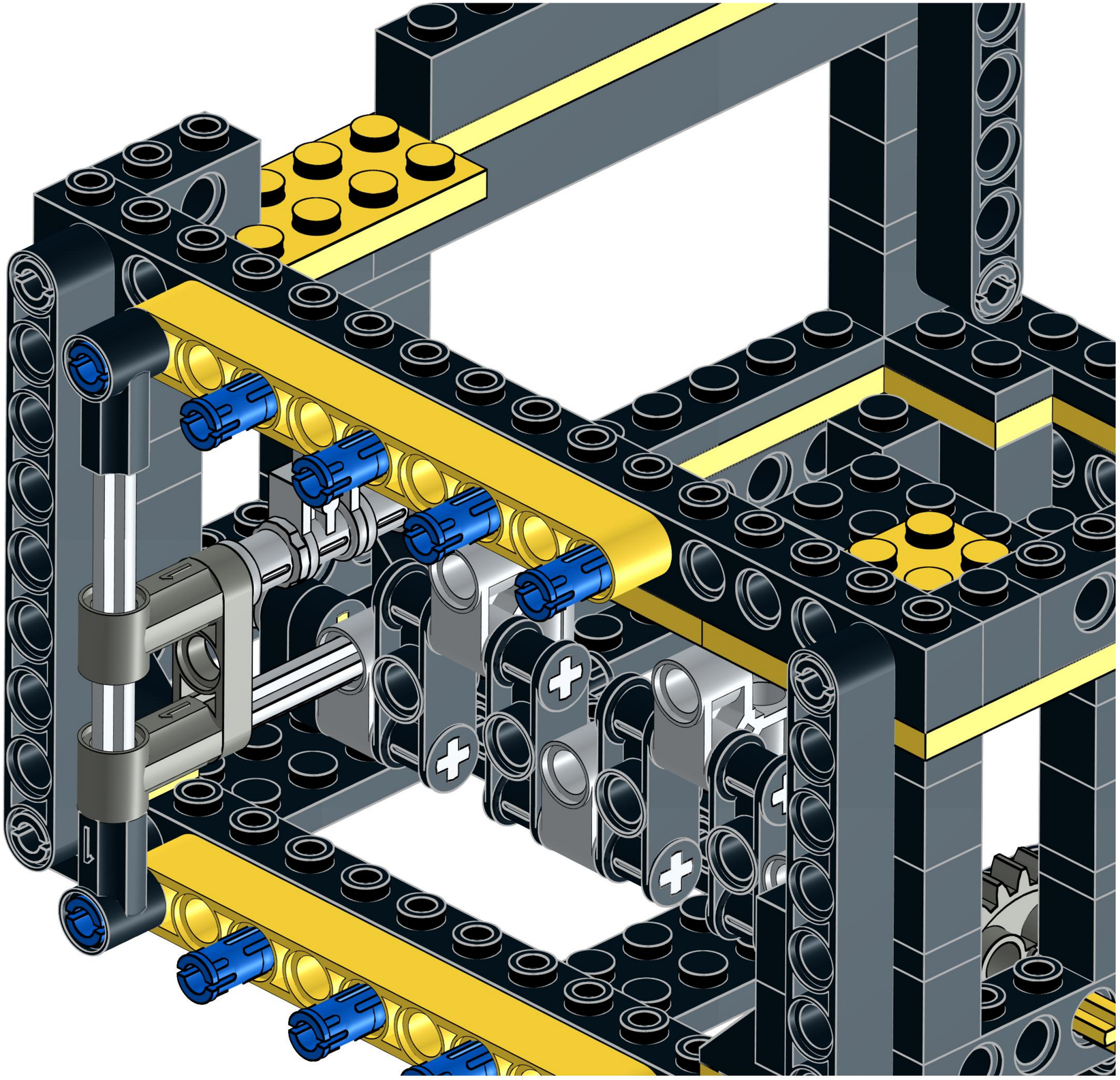

Alternate view
on next page.

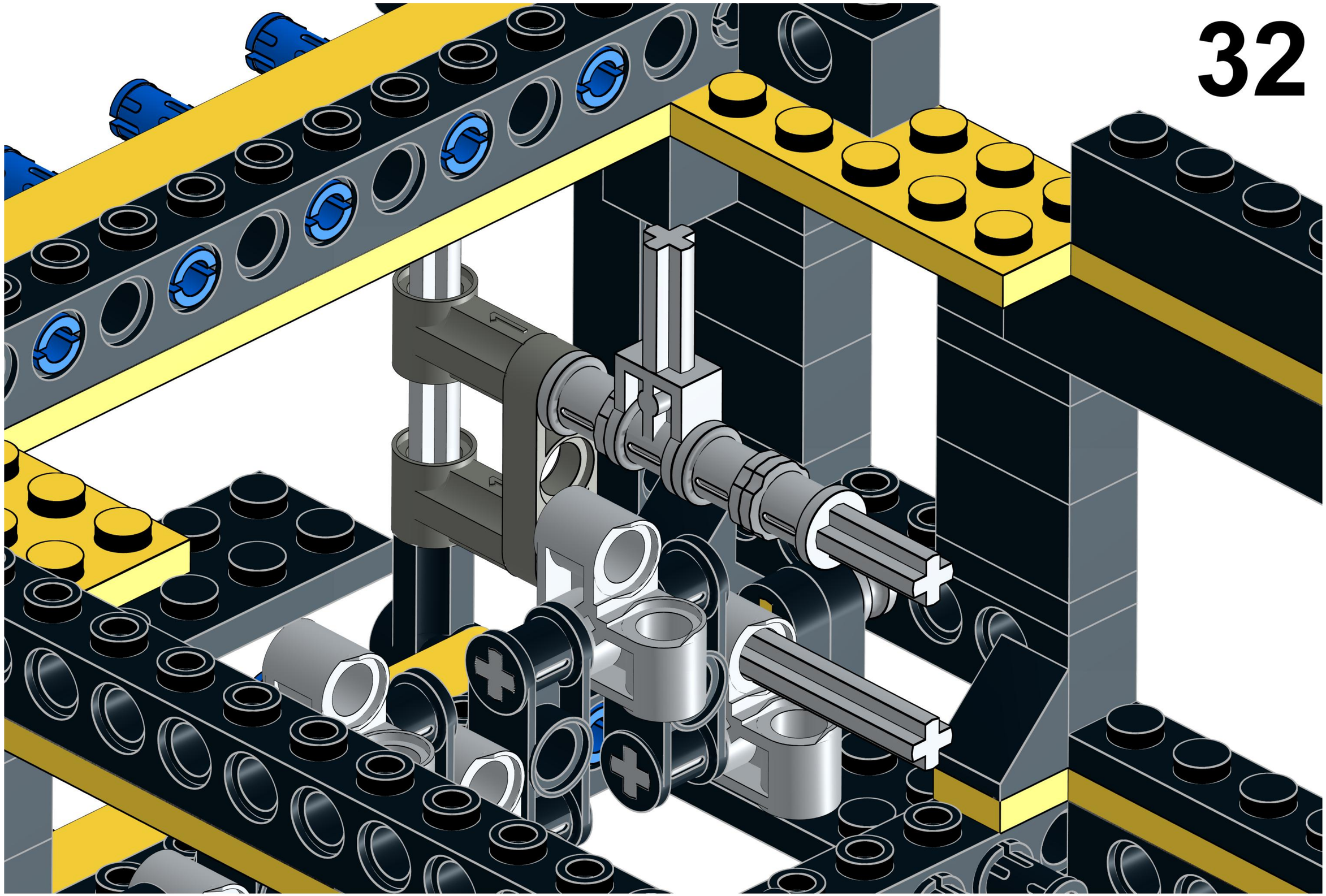

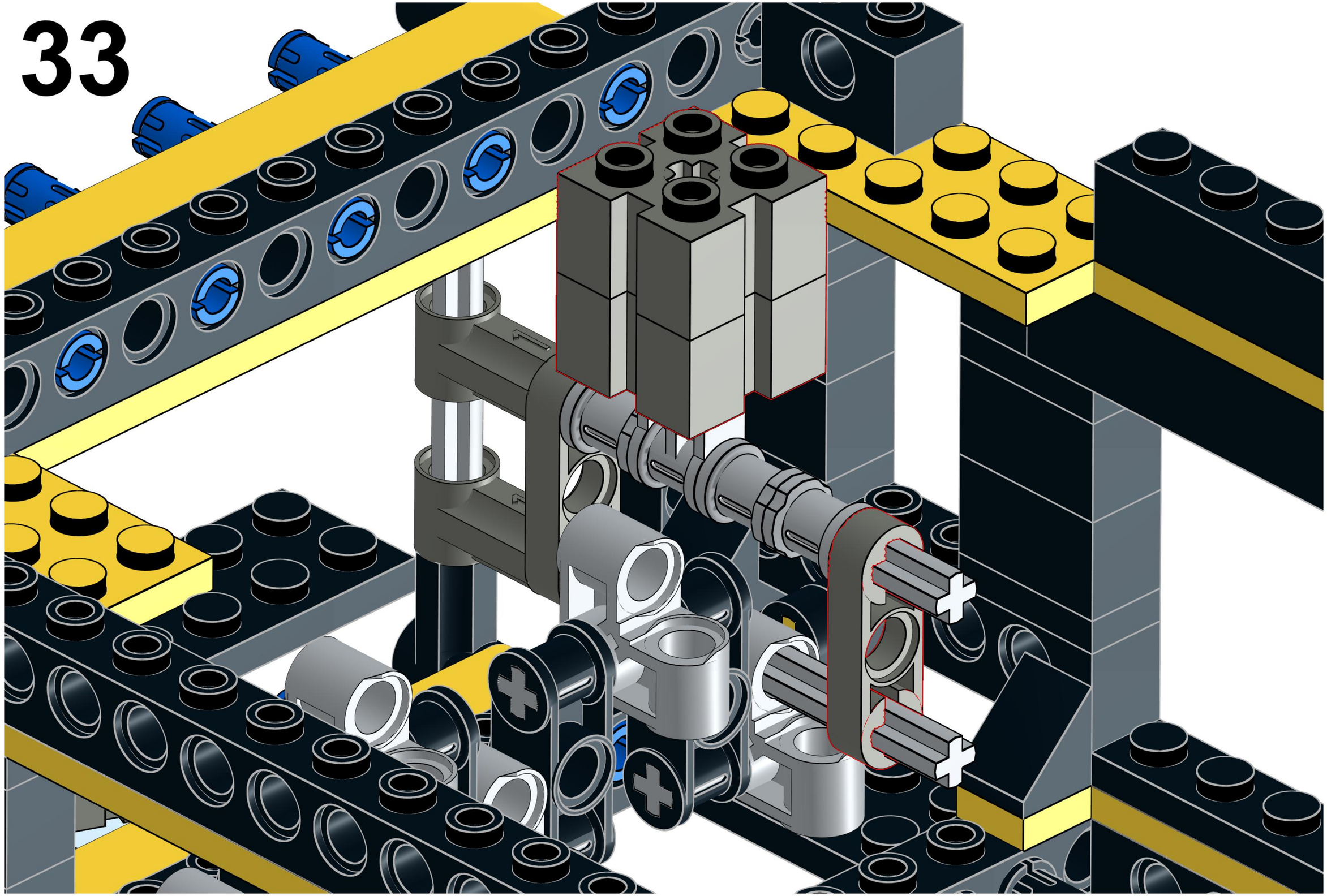

# 34

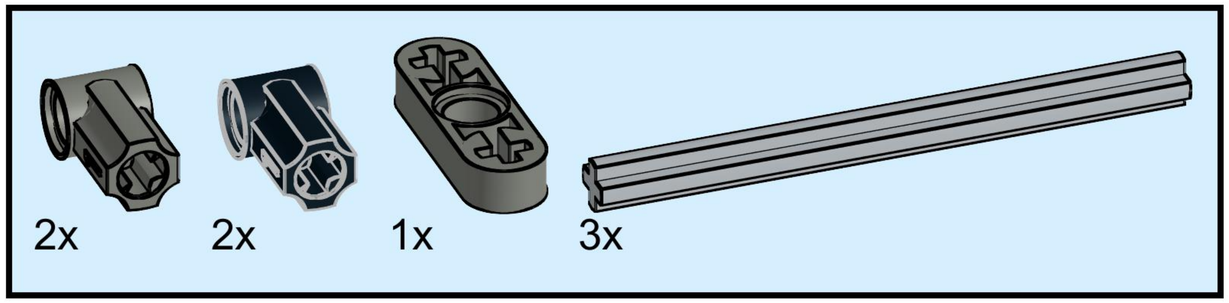


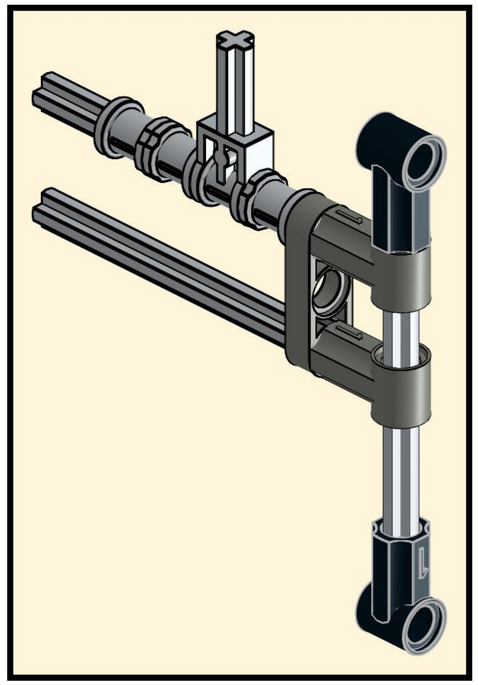

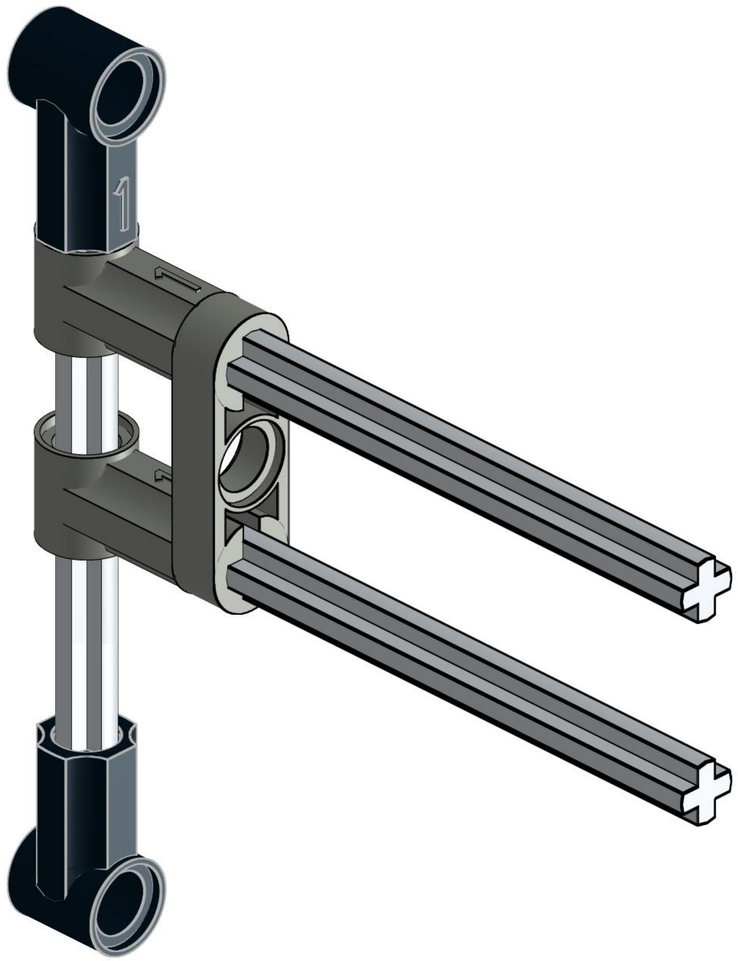

# 35

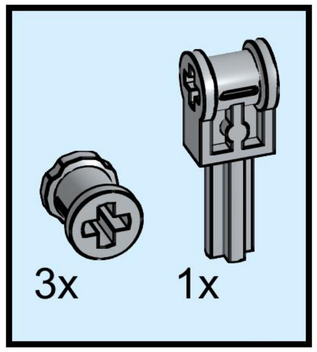


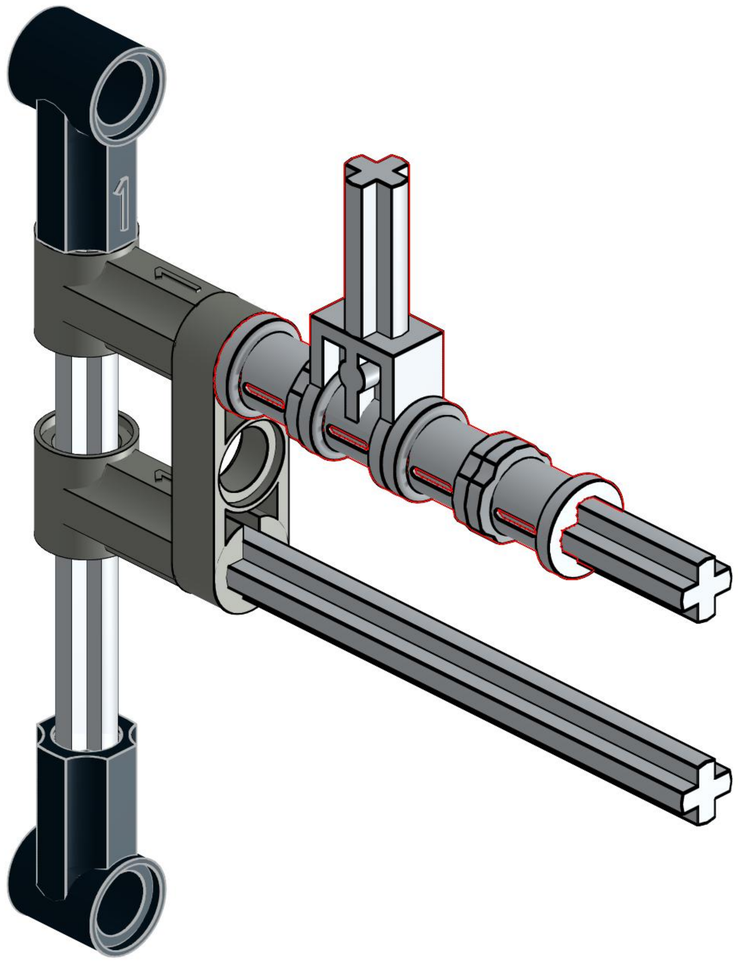

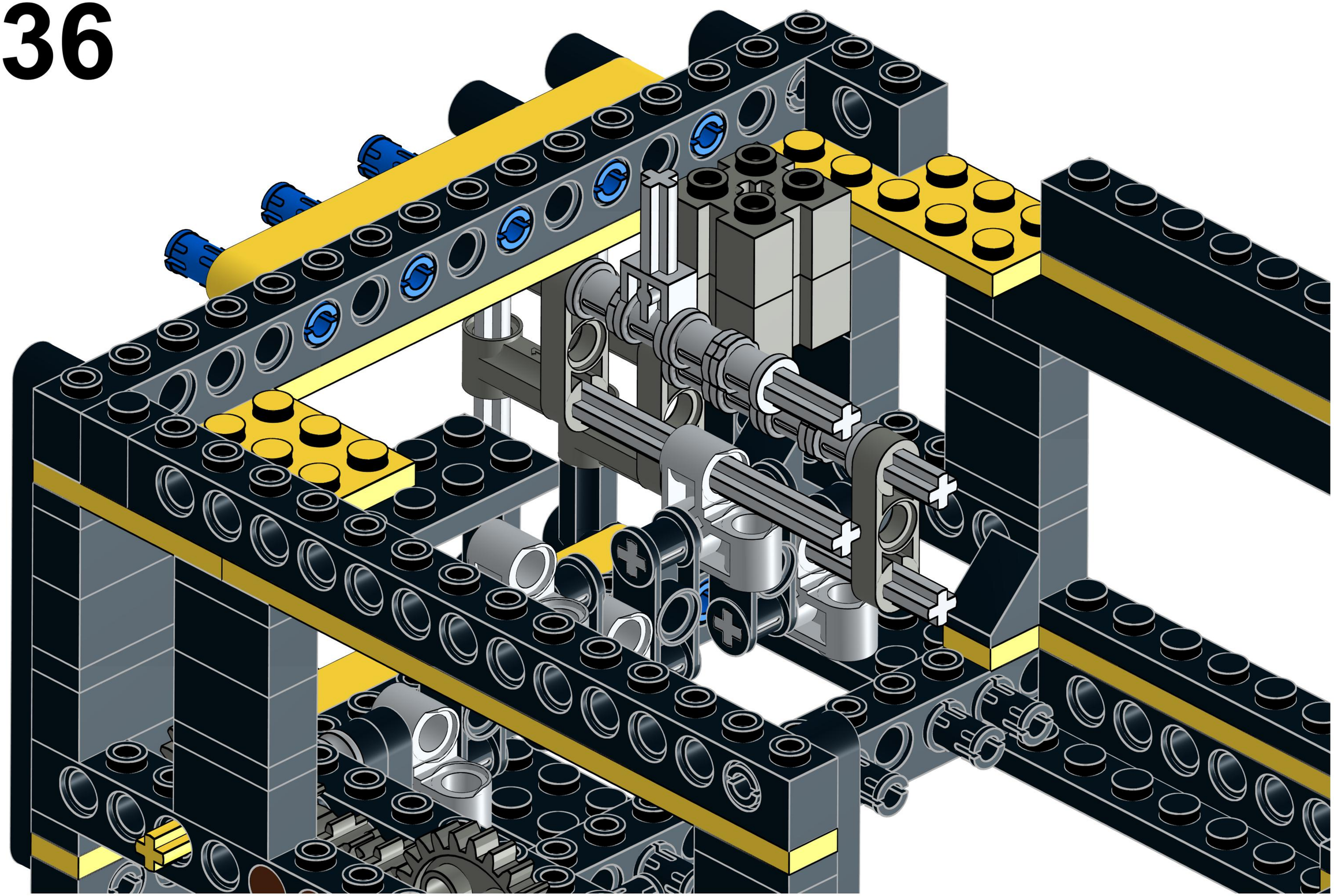

# 37




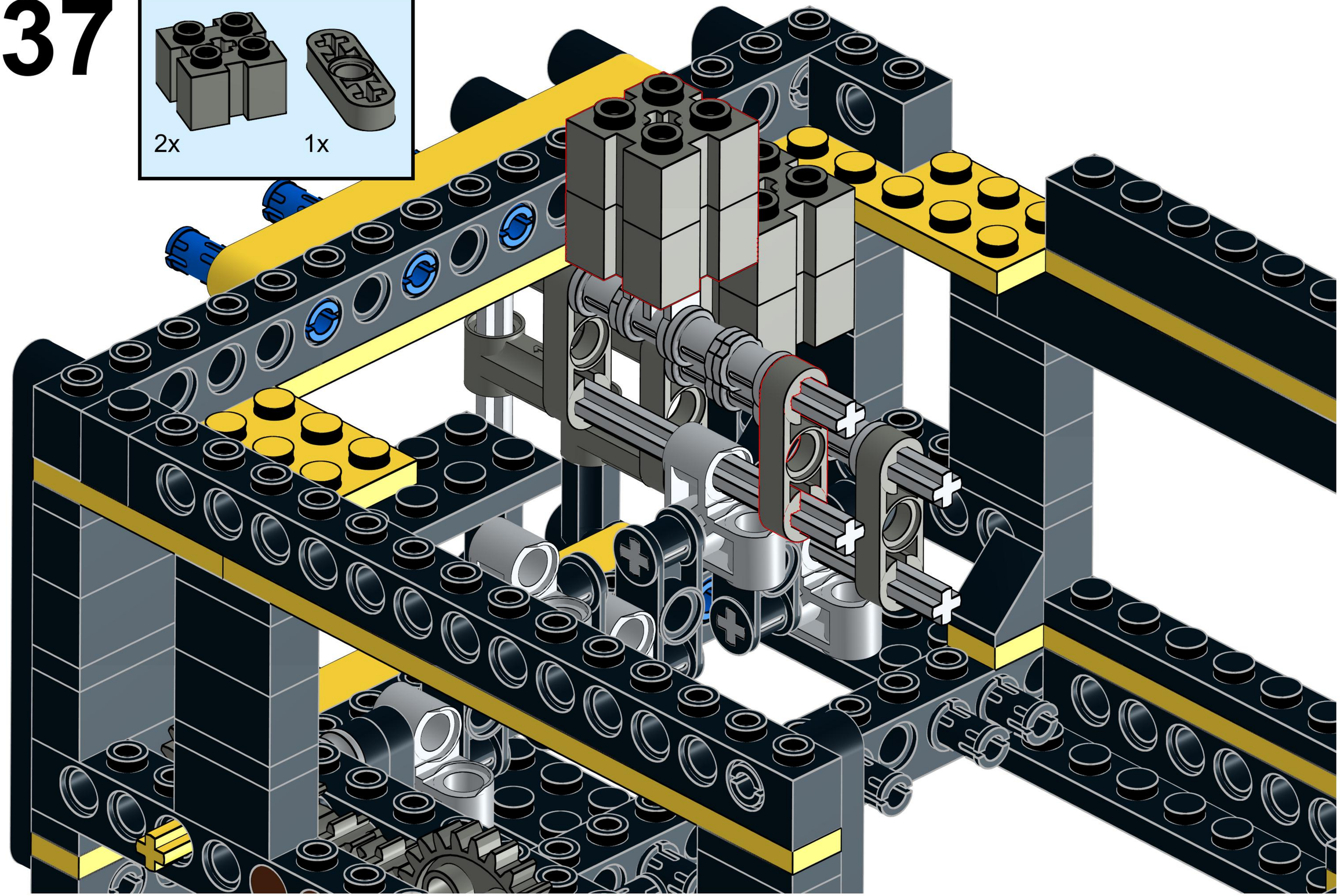

# 38

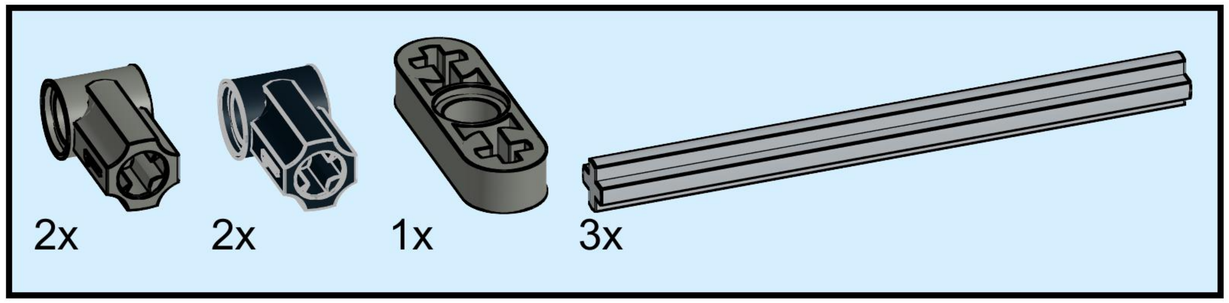


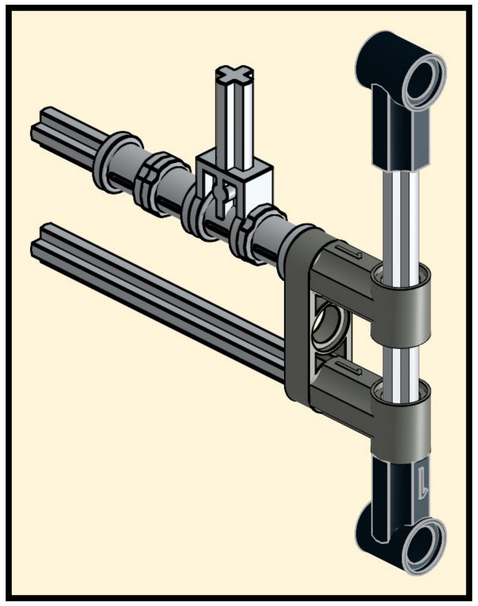

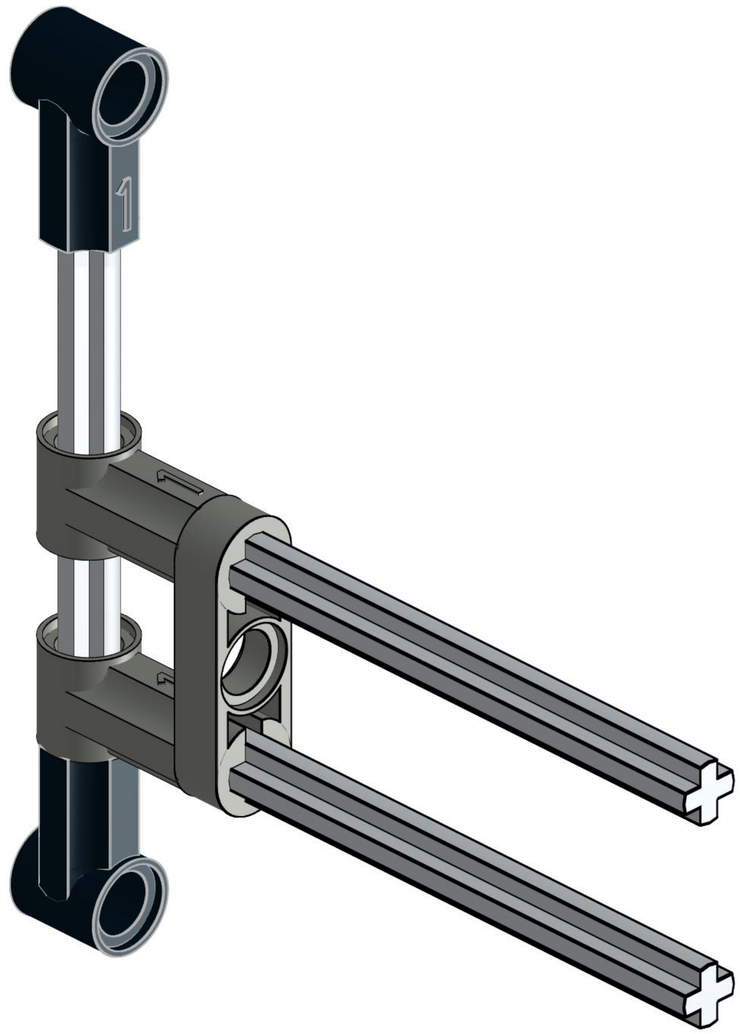

# 39

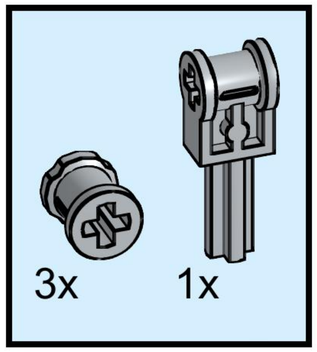


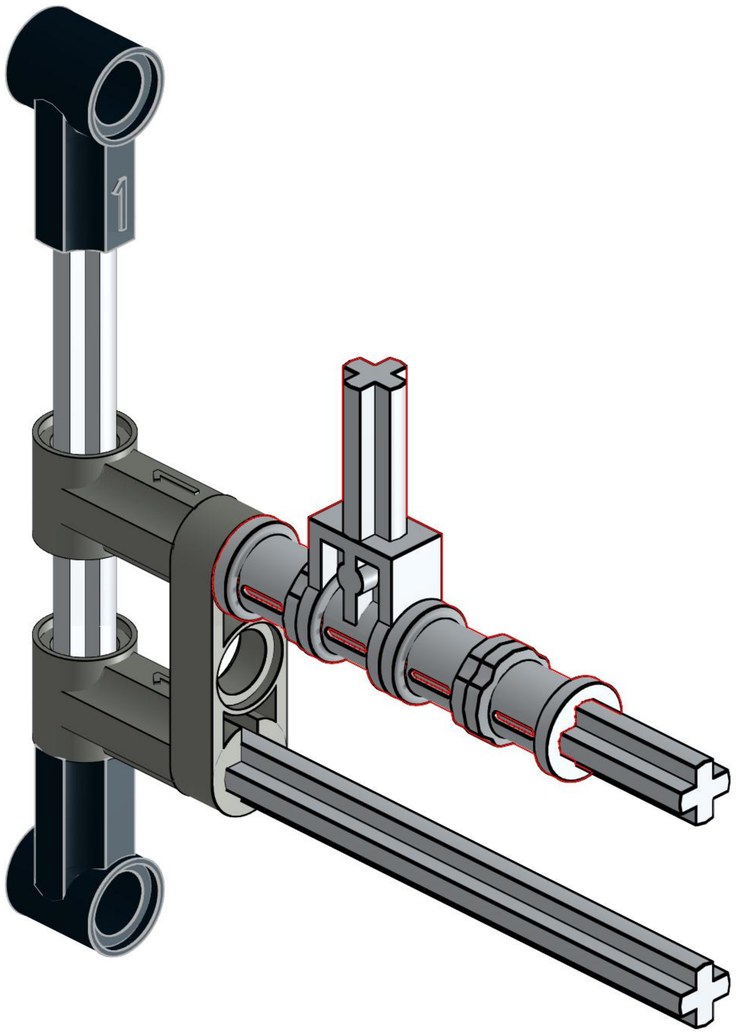

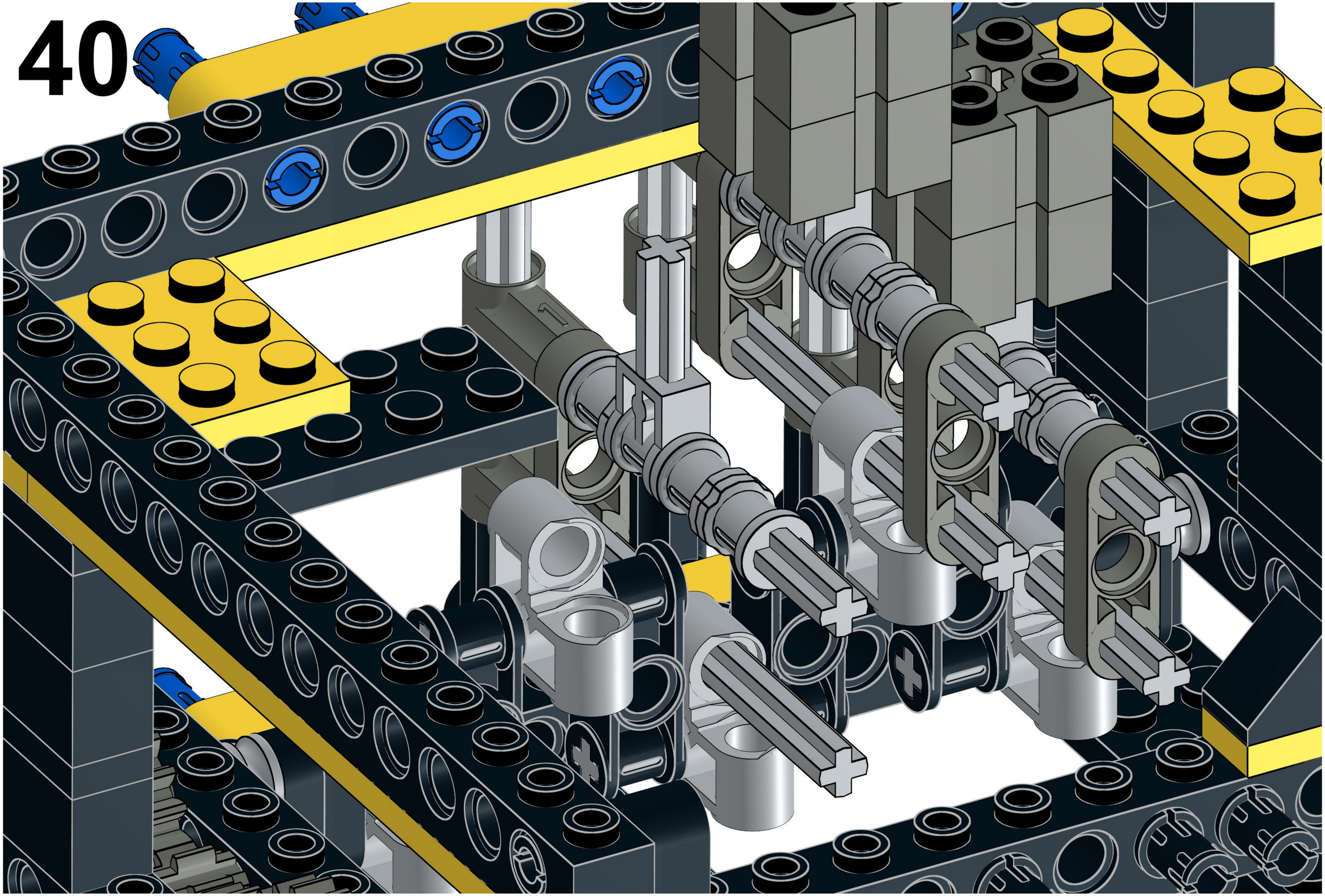

# 41

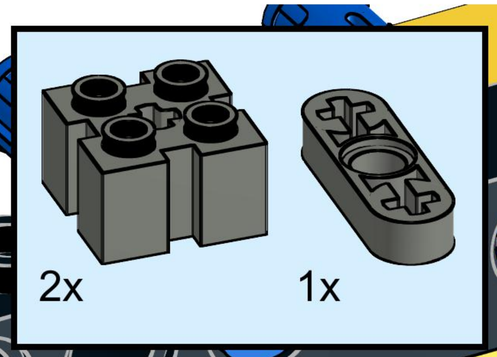

# 42

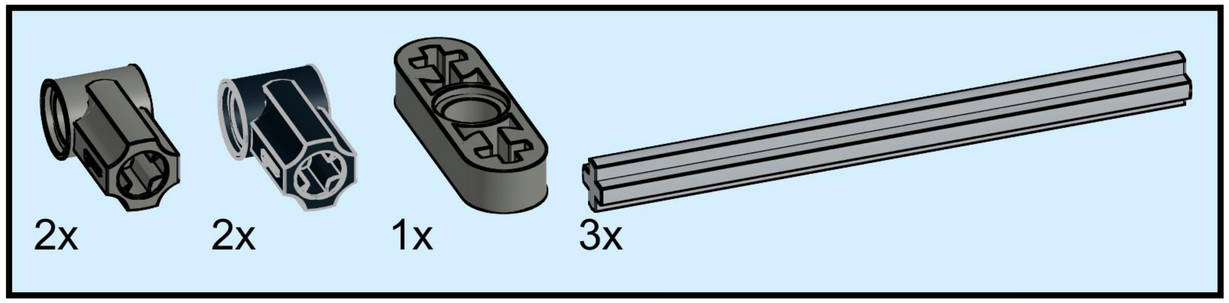


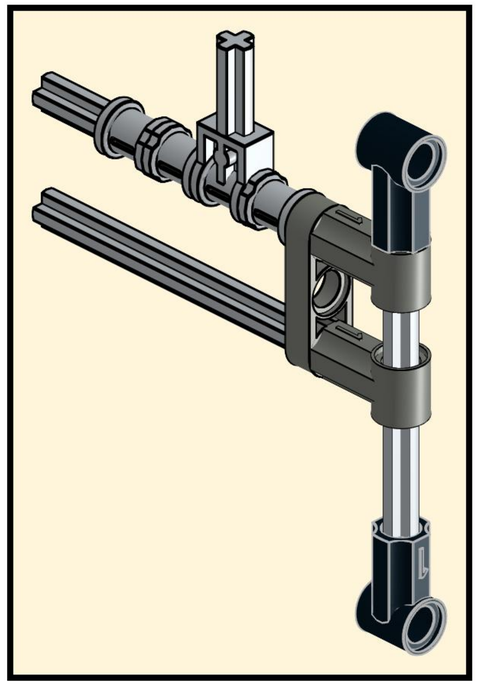

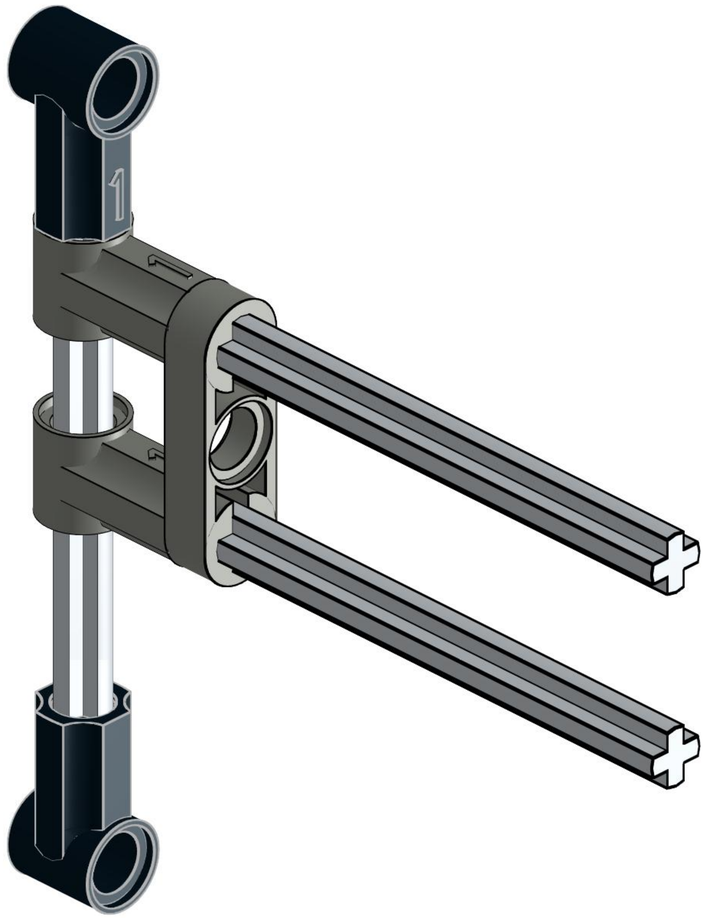

# 43

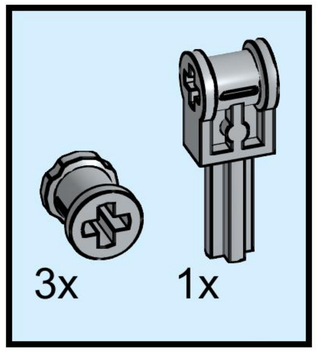


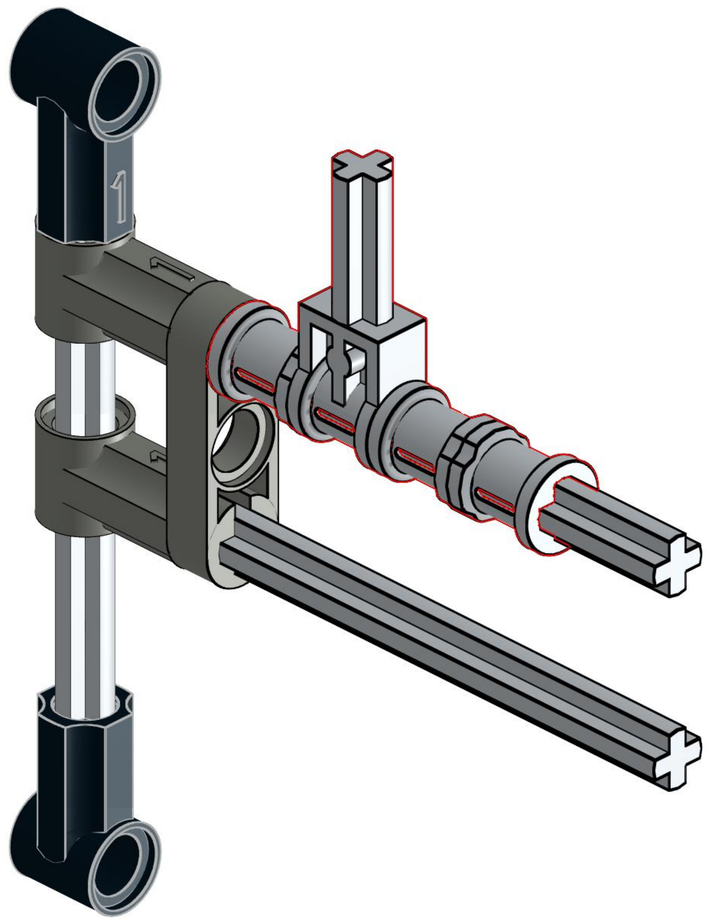

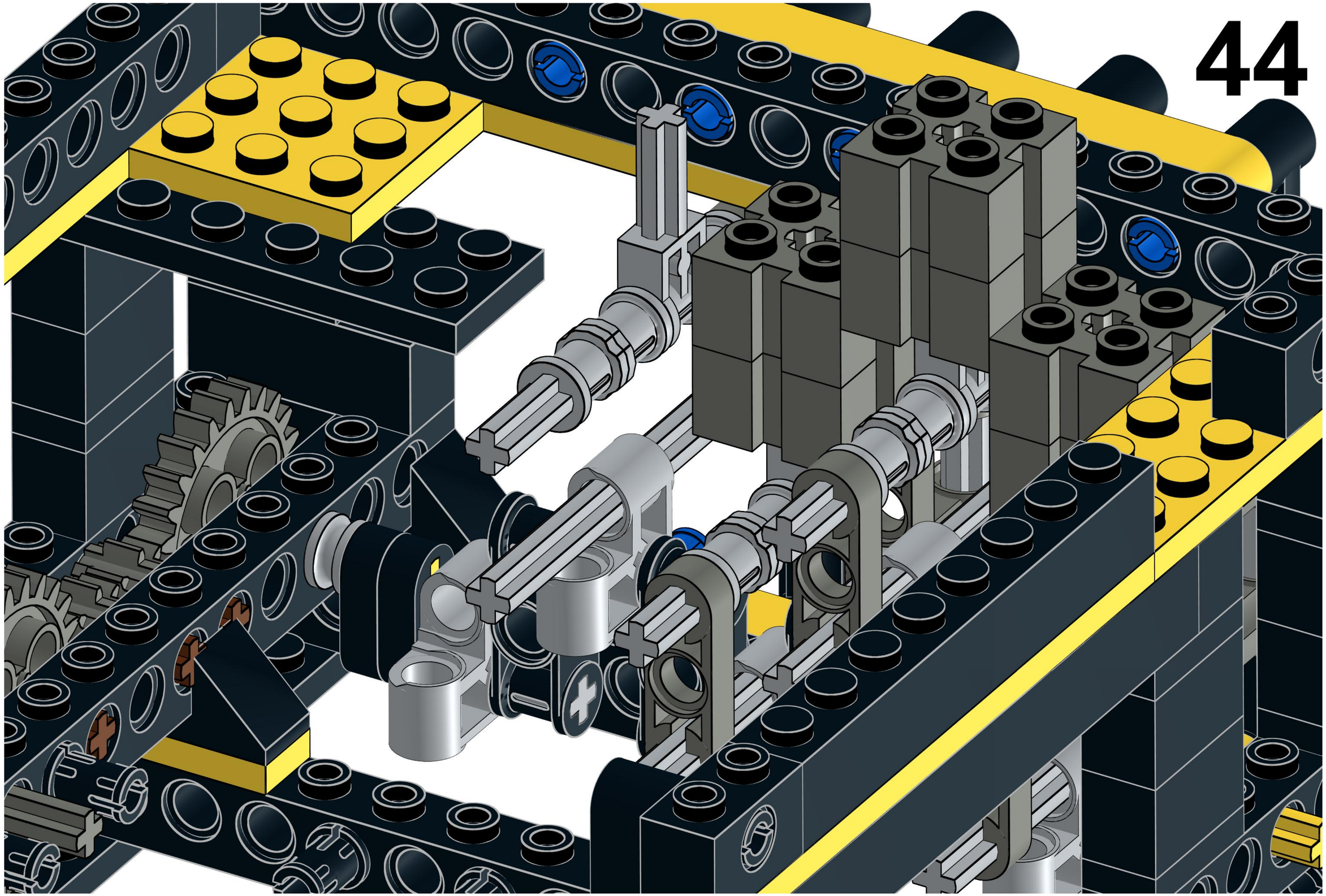

# 45

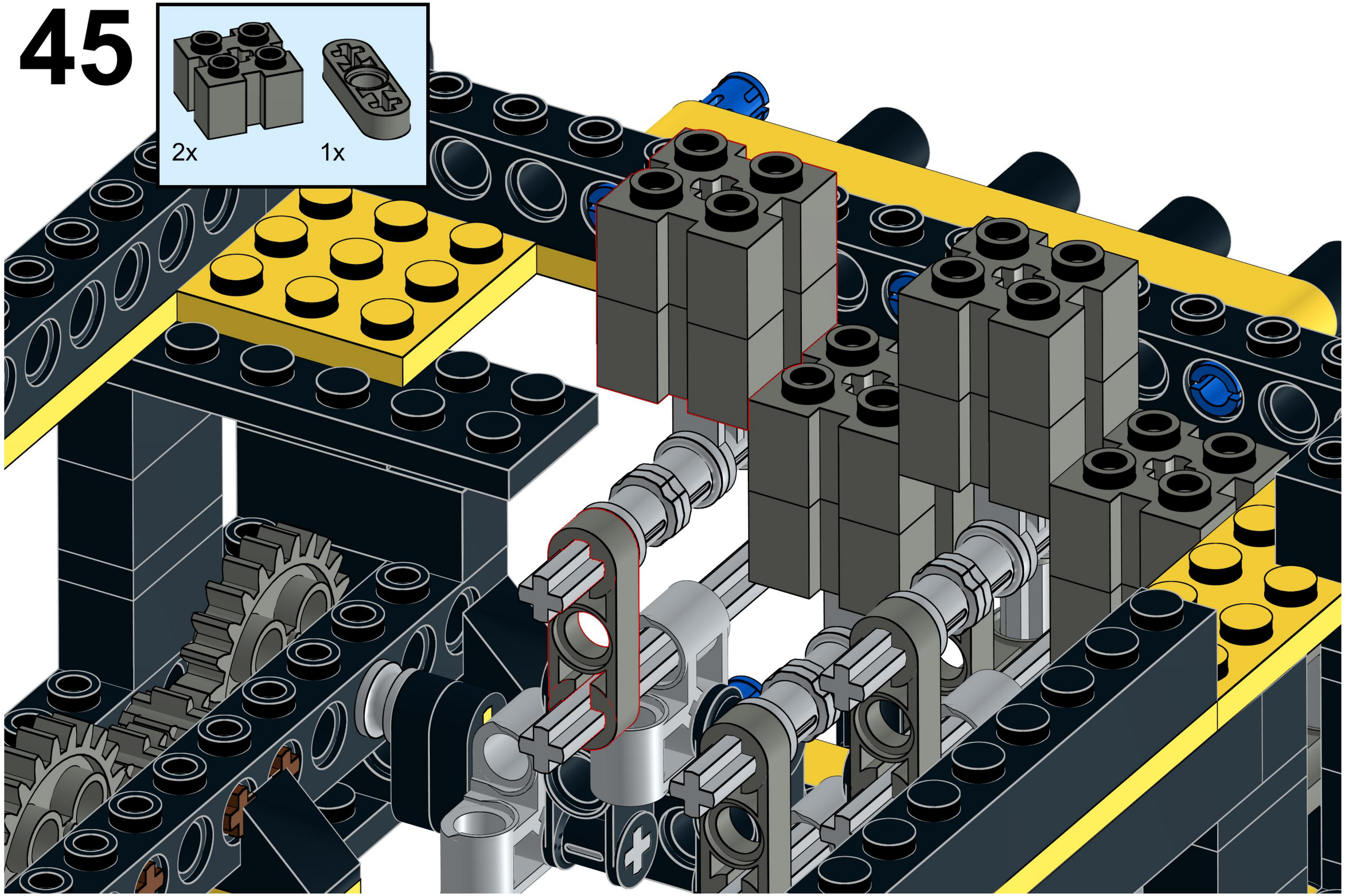

# 46

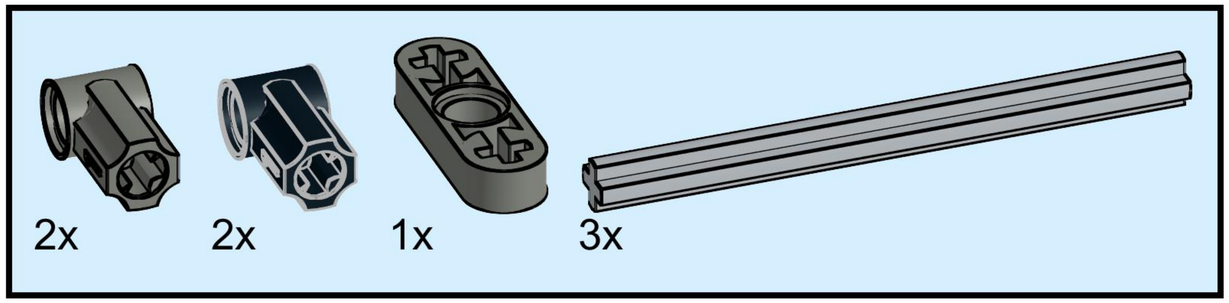


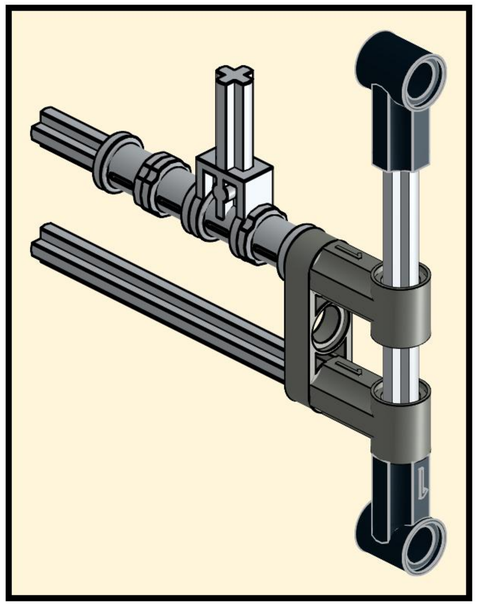

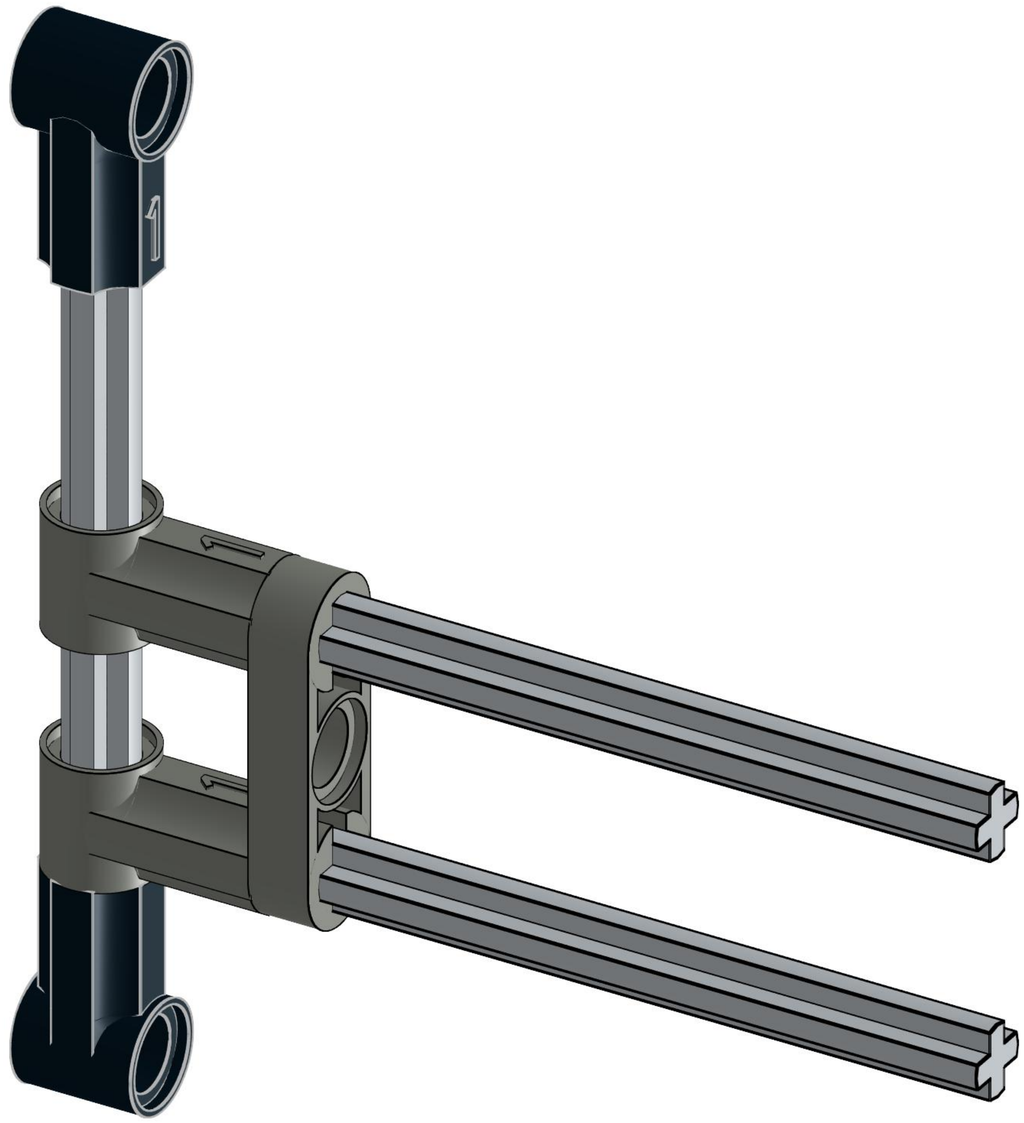

# 47

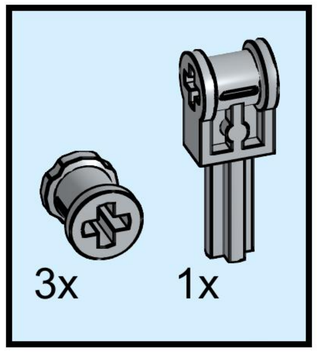


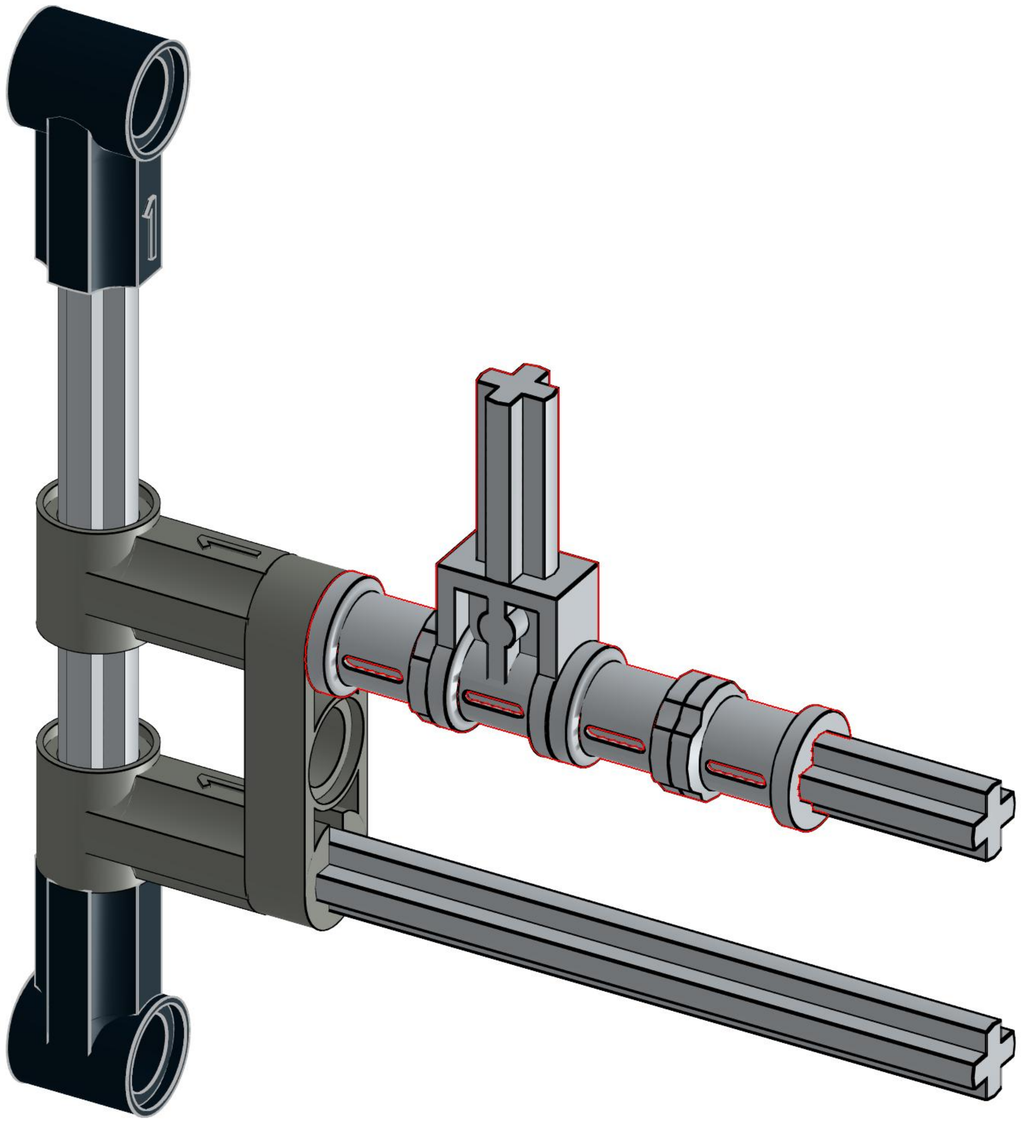

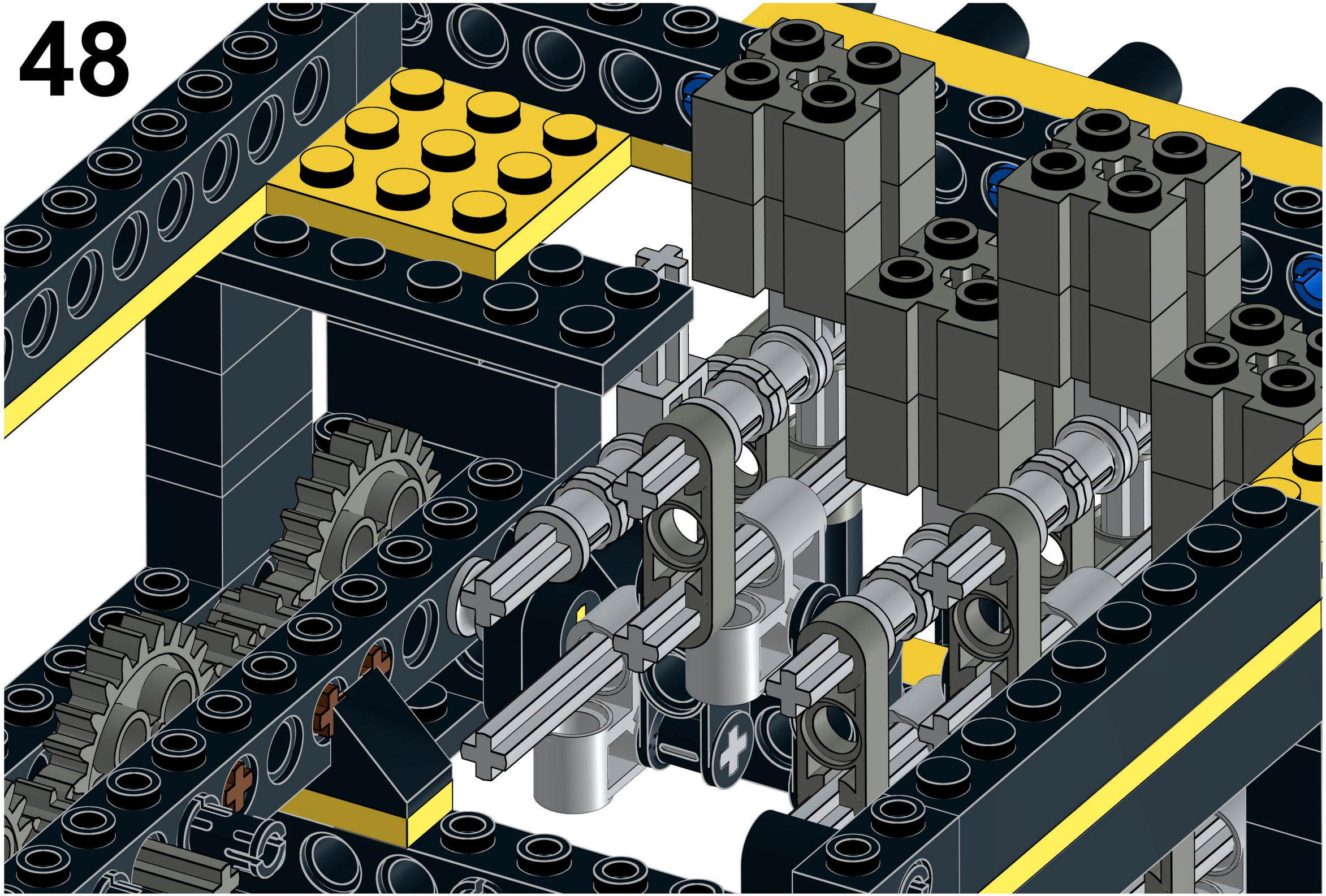

# 49

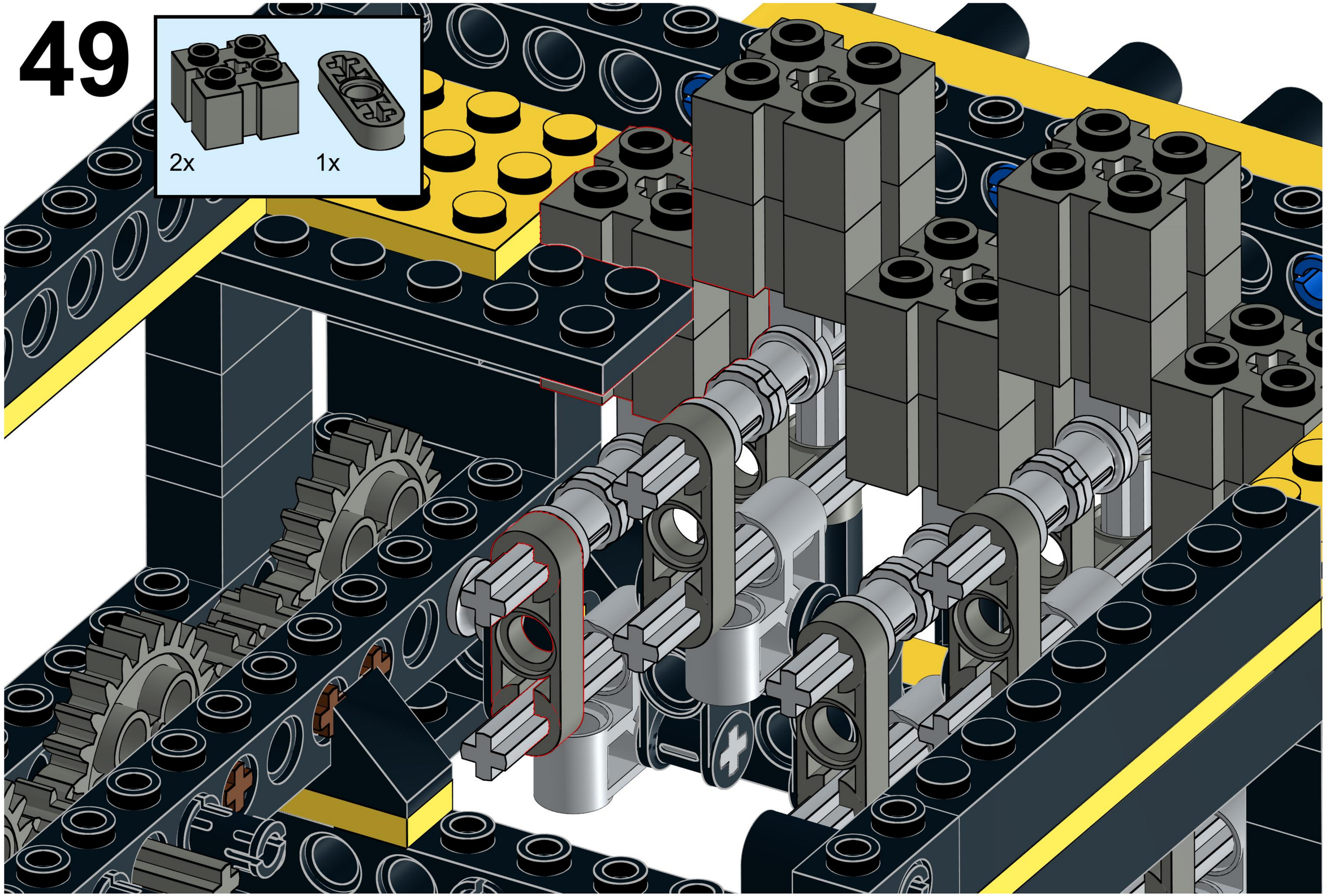

# 50

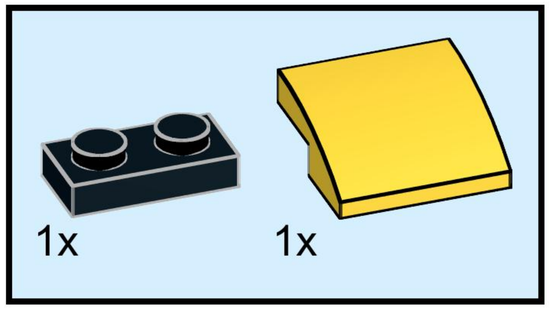


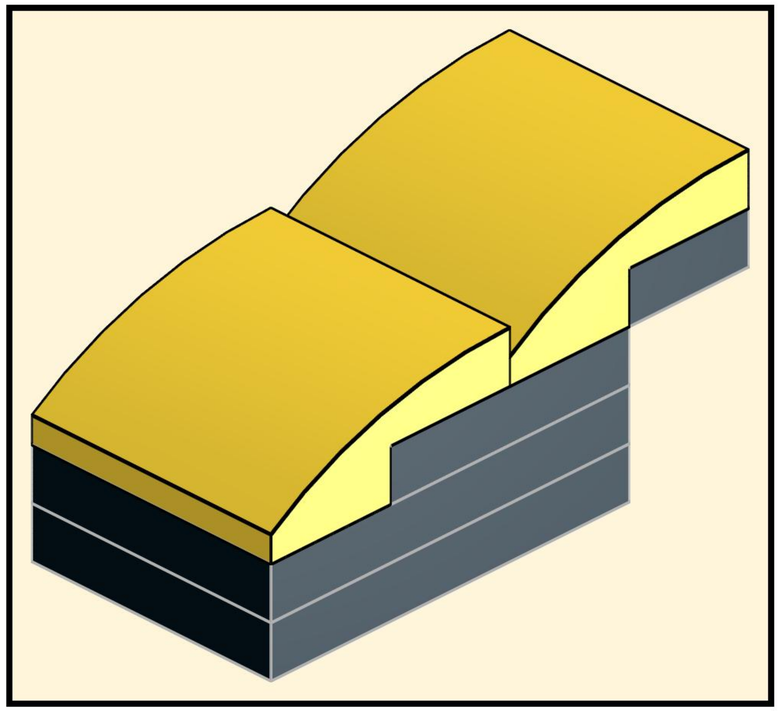

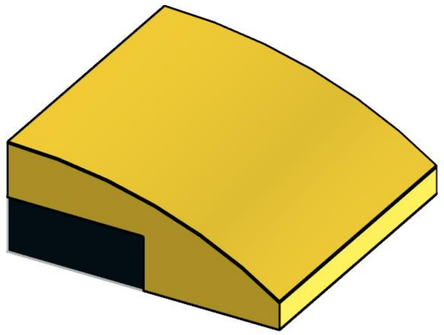

# 51

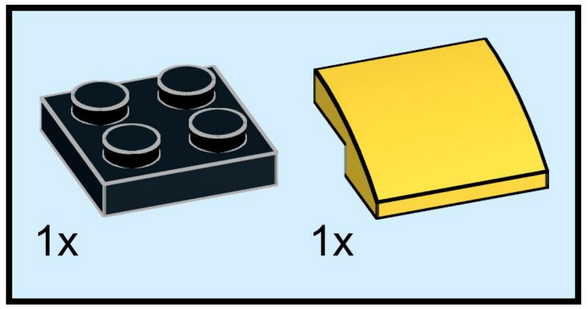


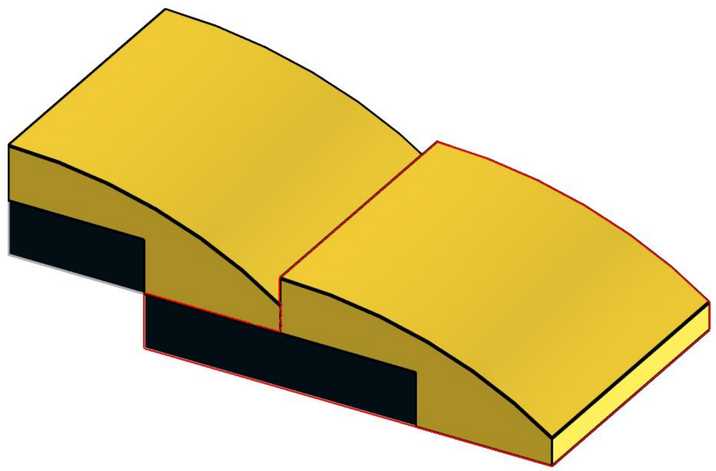

# 52

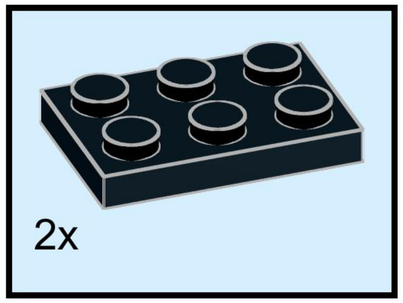


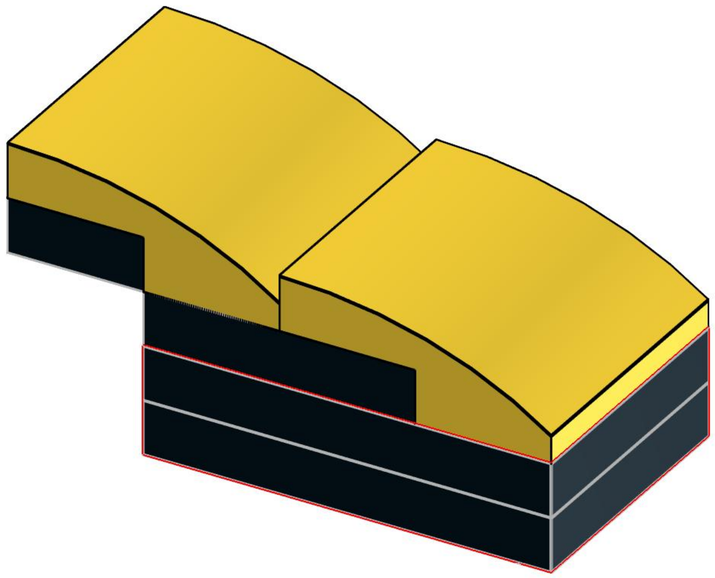

53

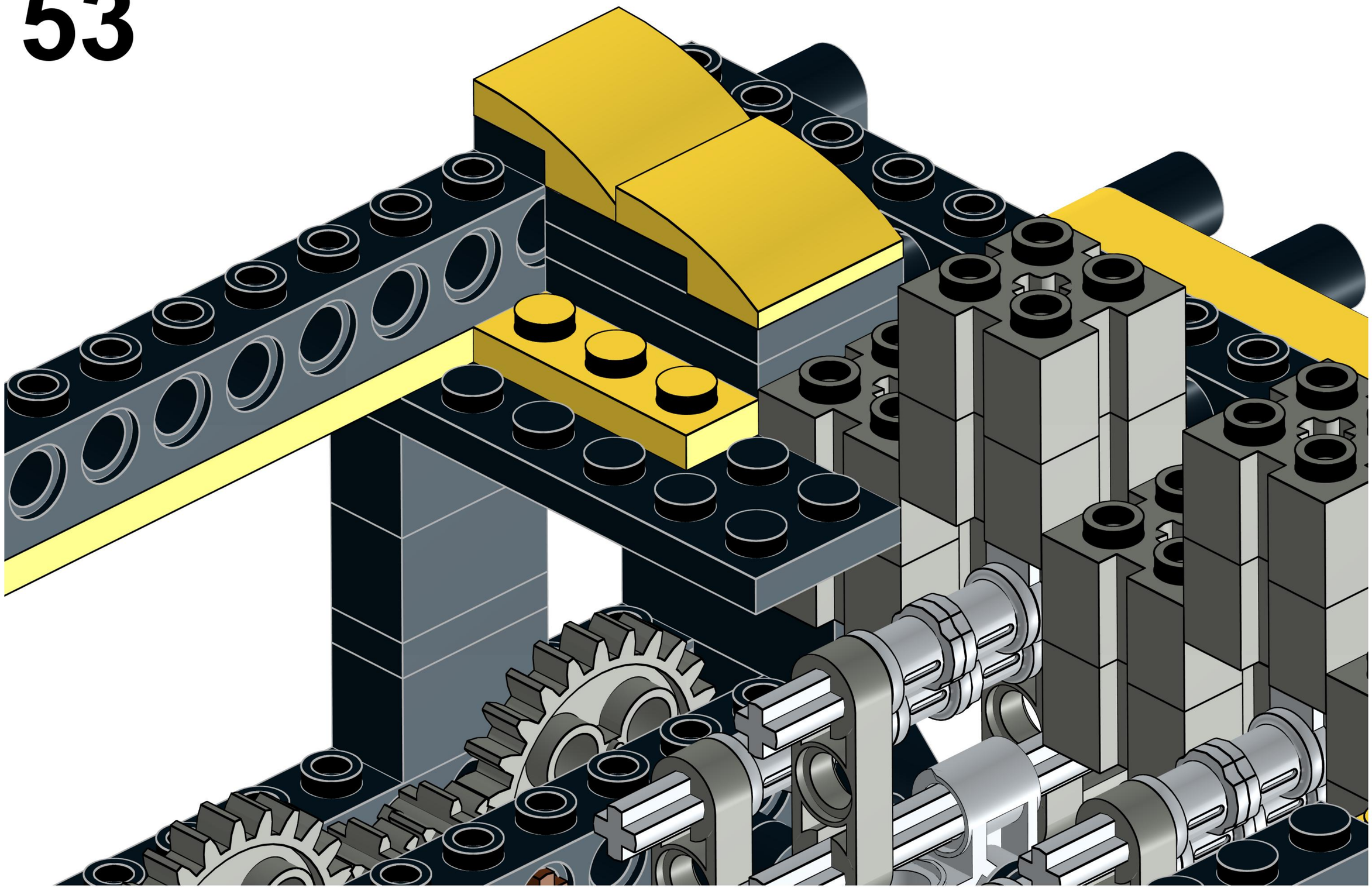

# 54

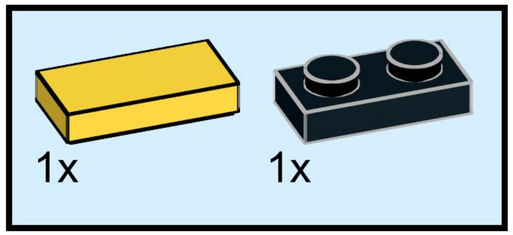


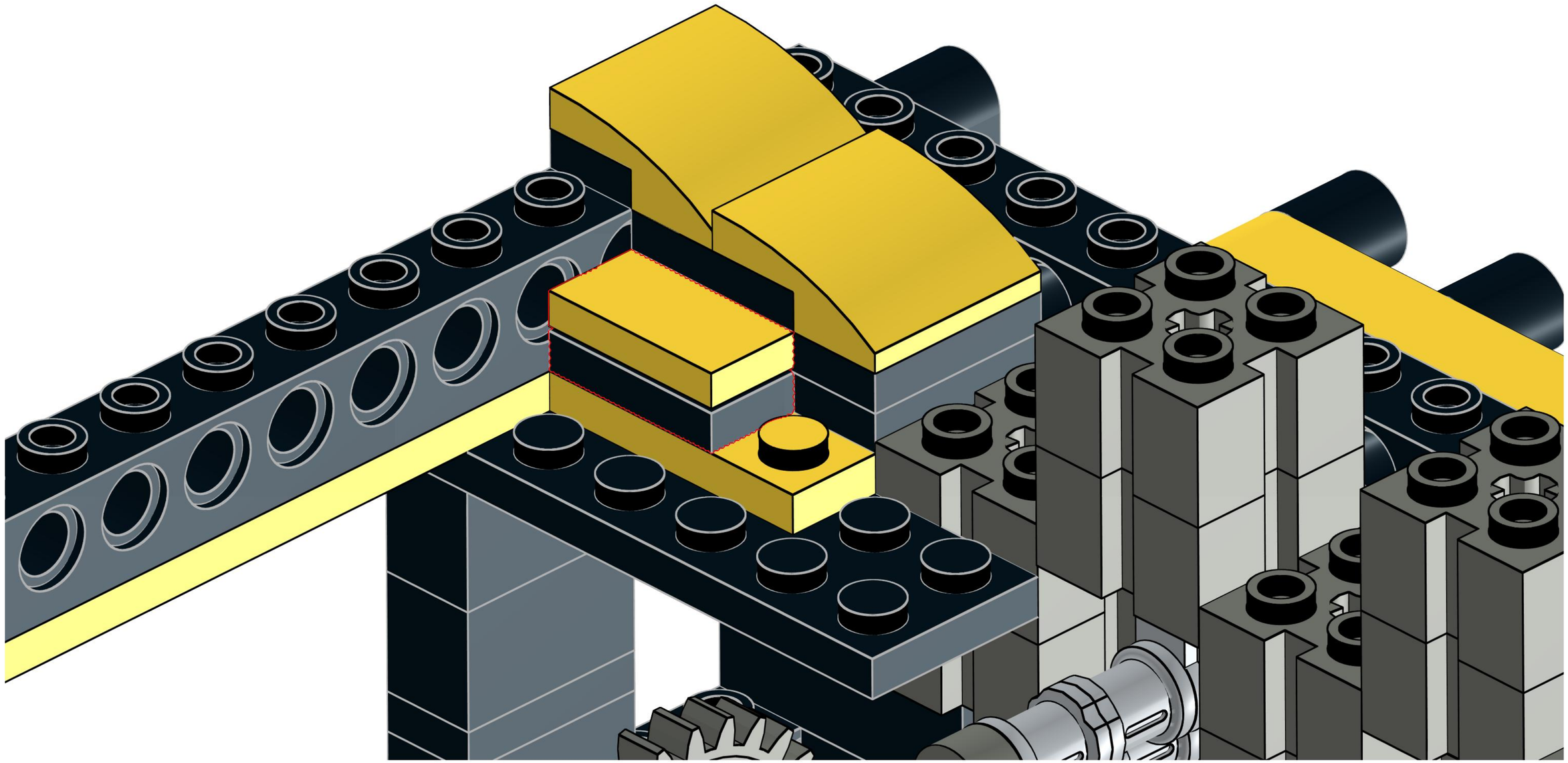

# 55

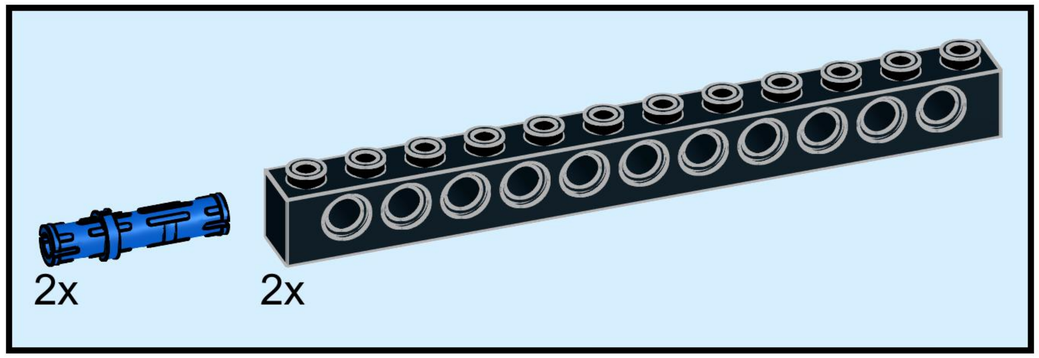


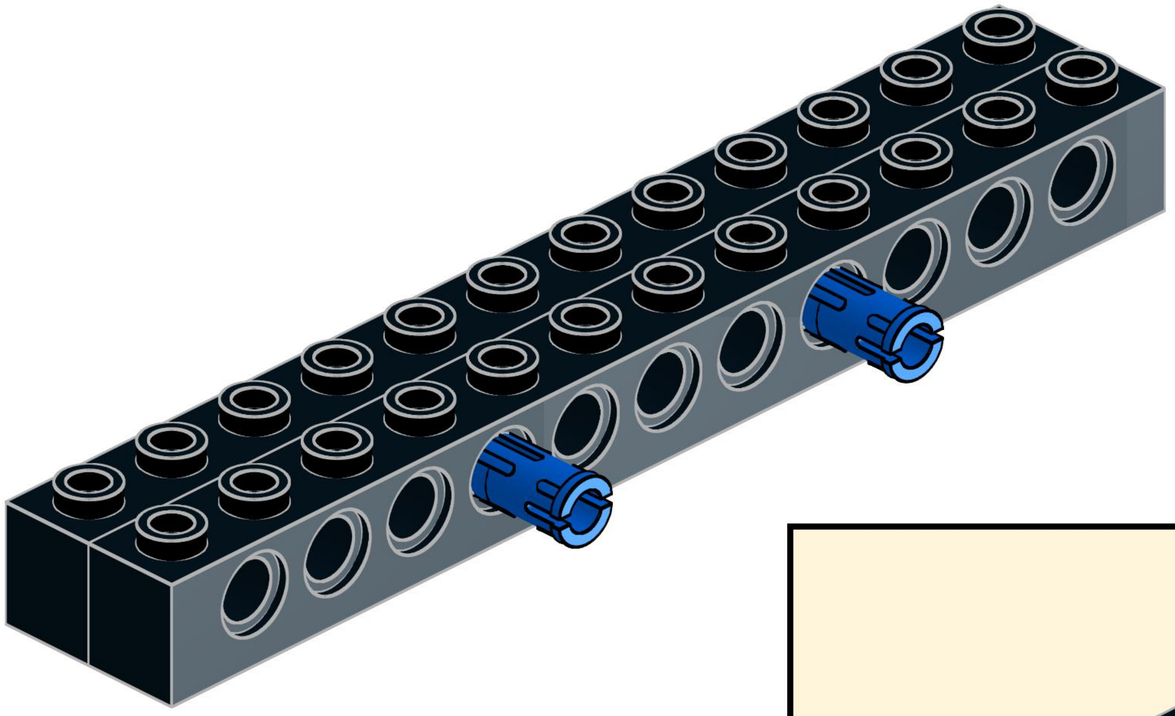

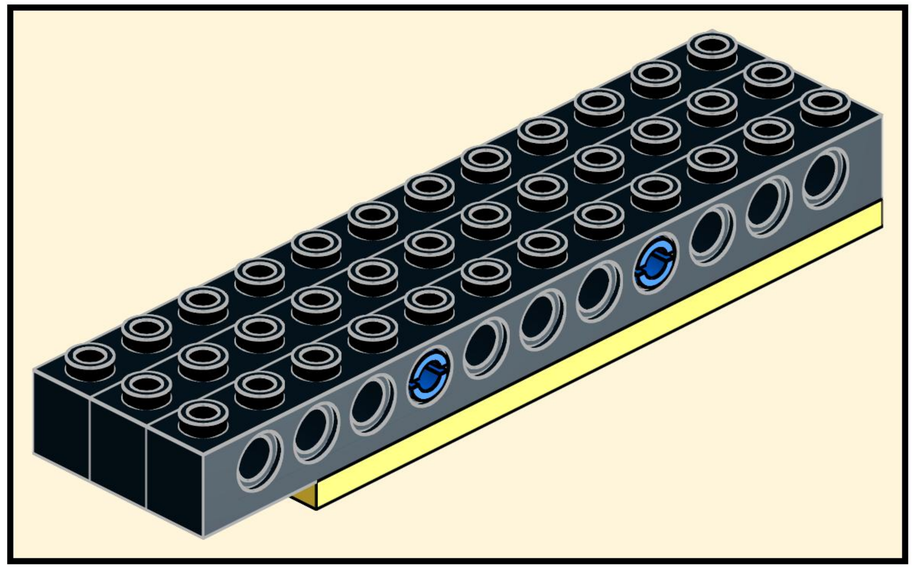

# 56

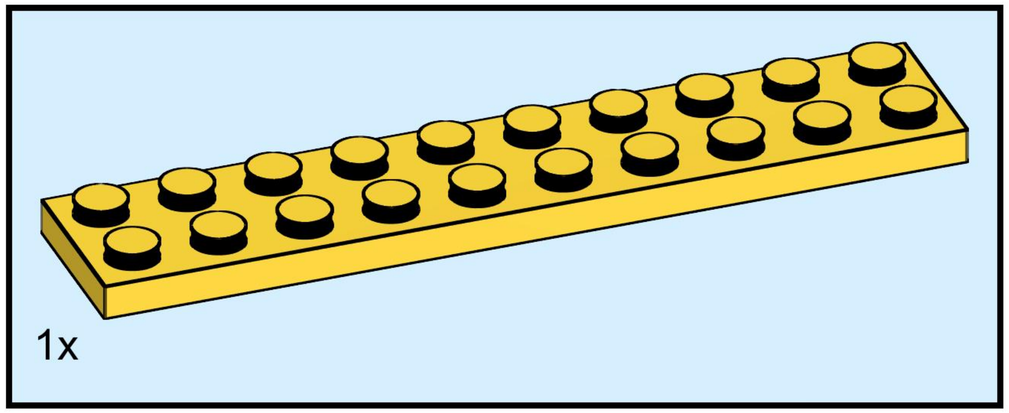


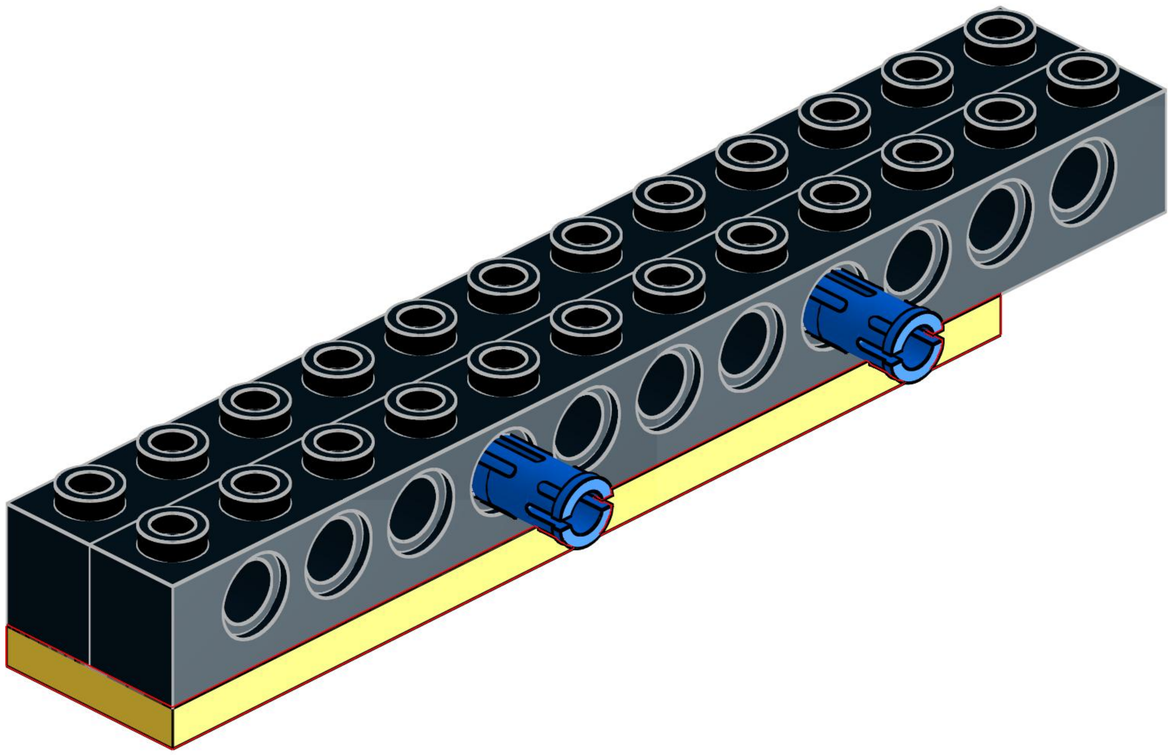

# 57

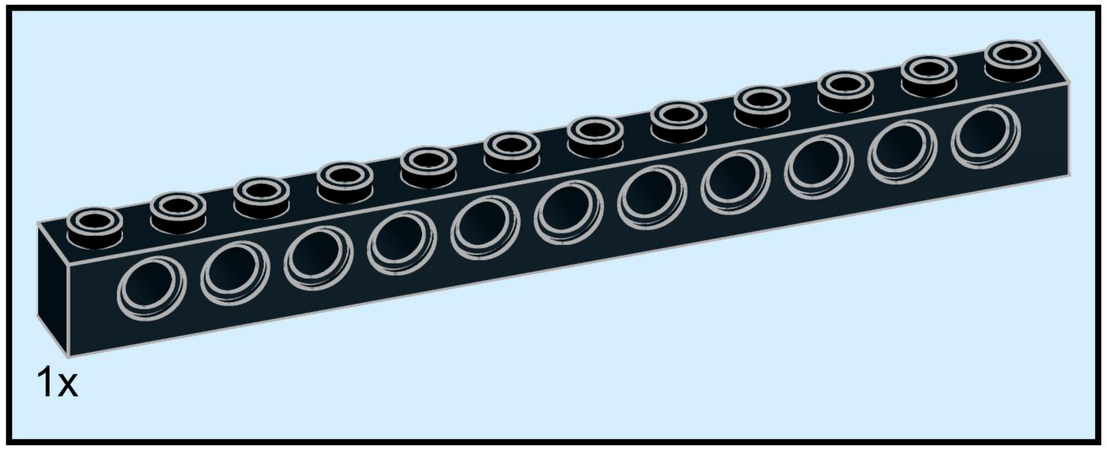


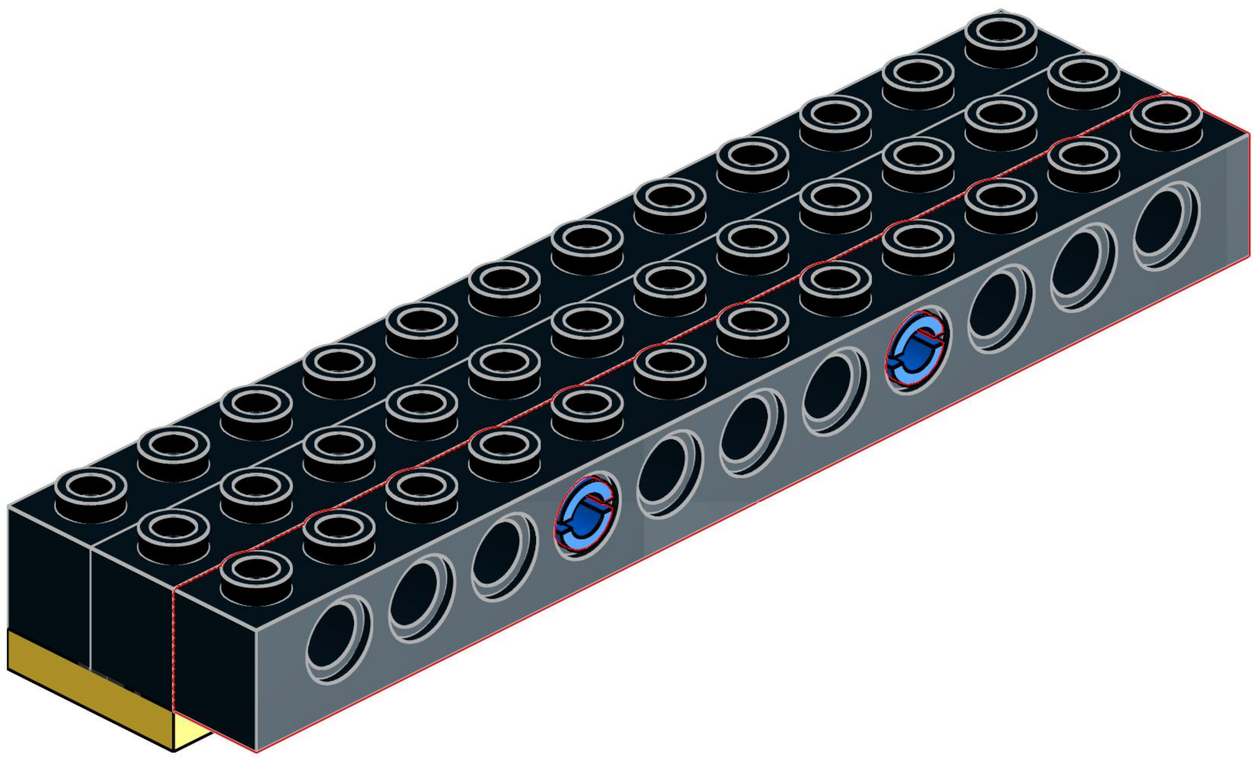

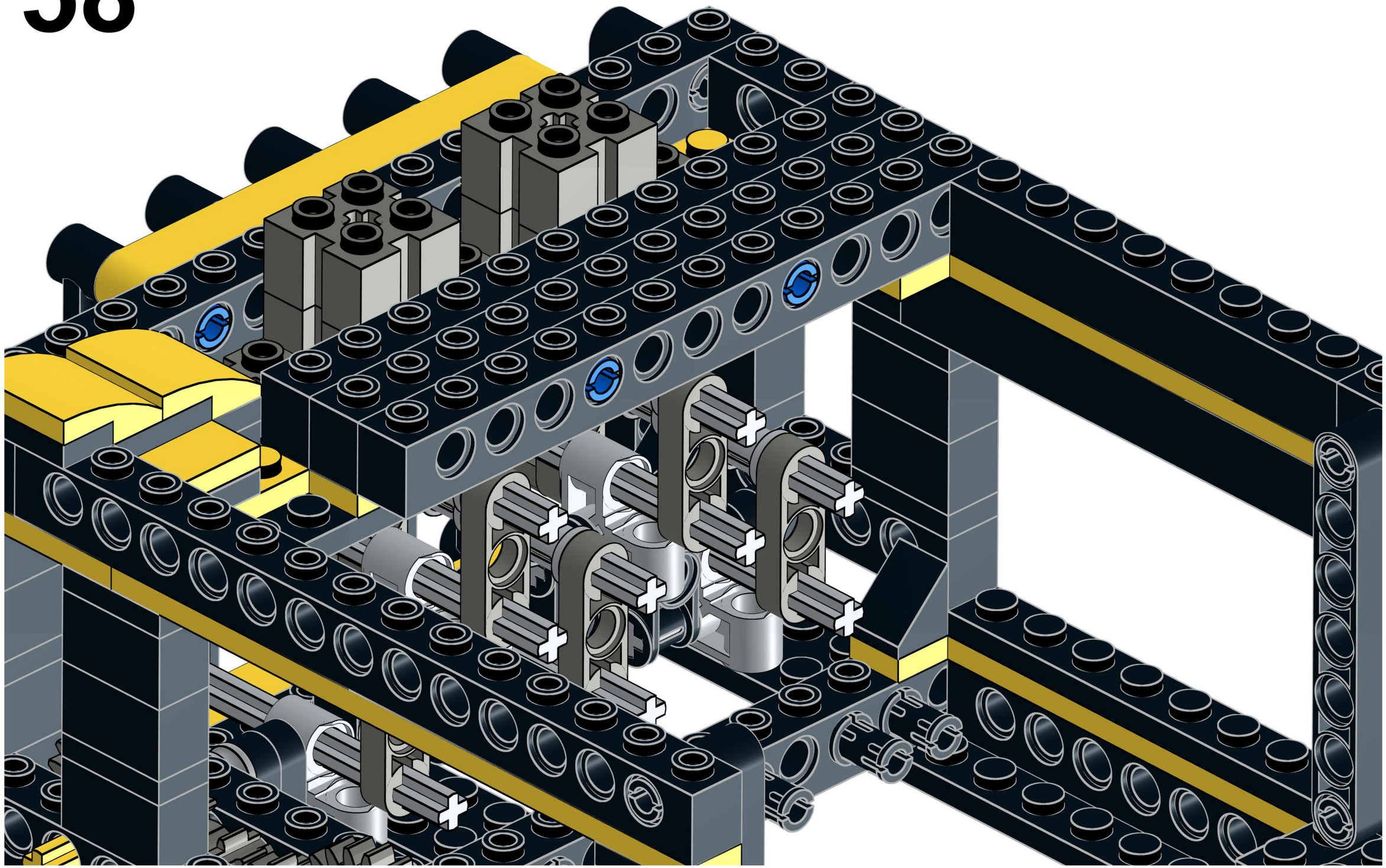

# 59

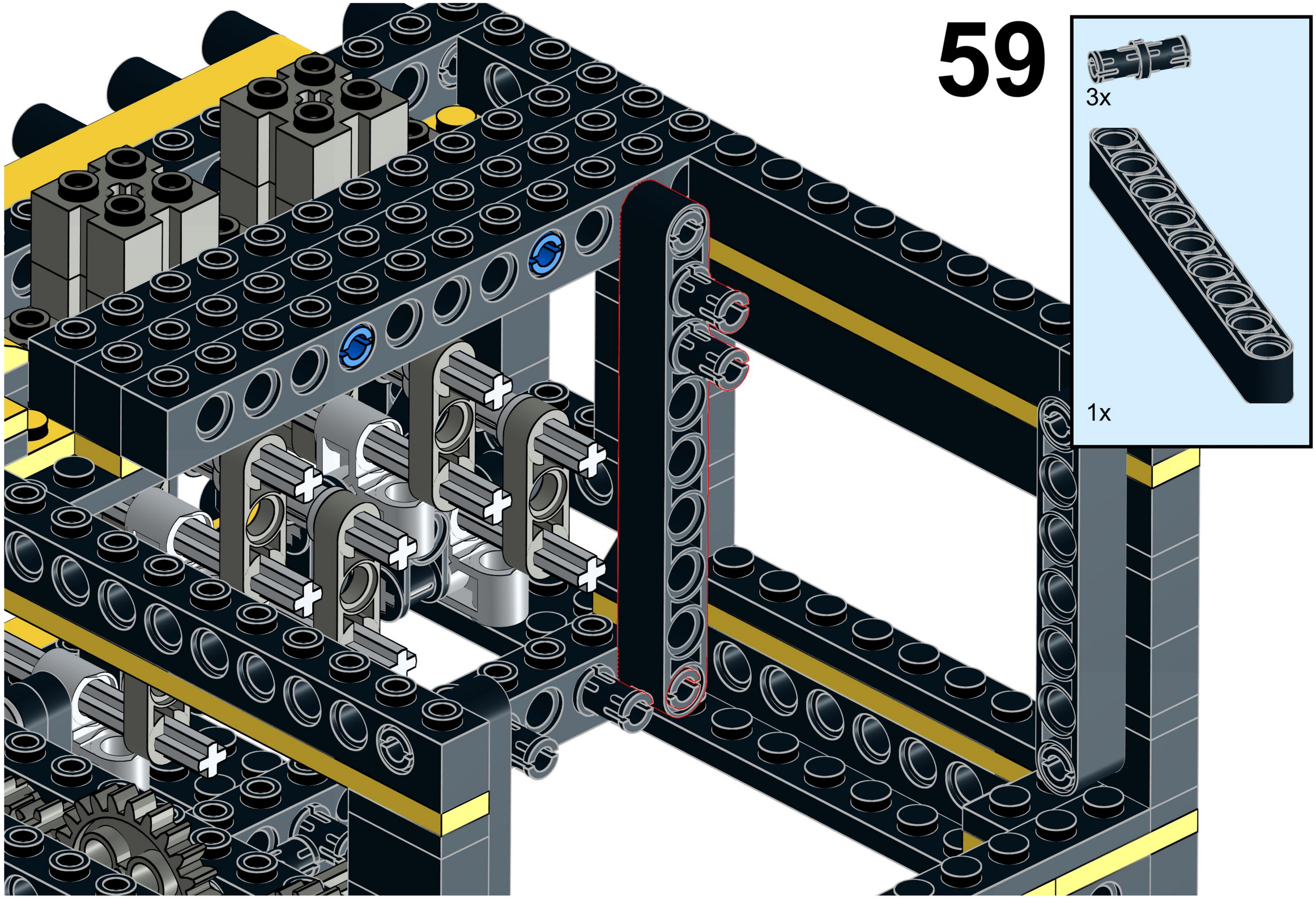

# 60

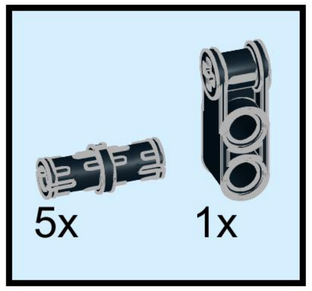


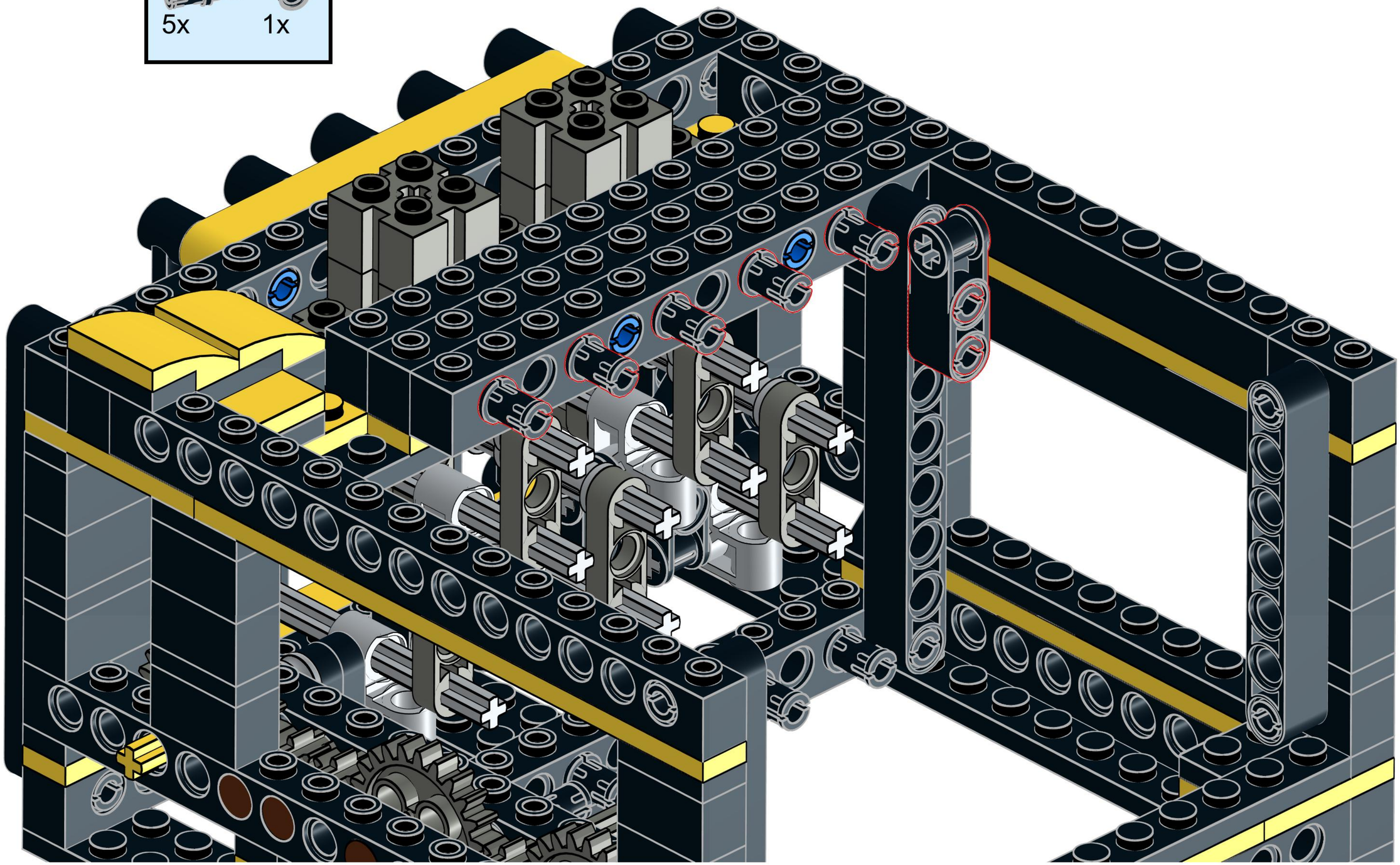

# 61

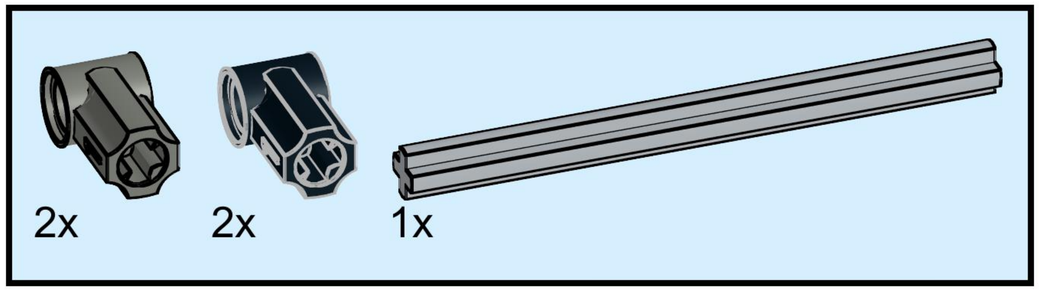


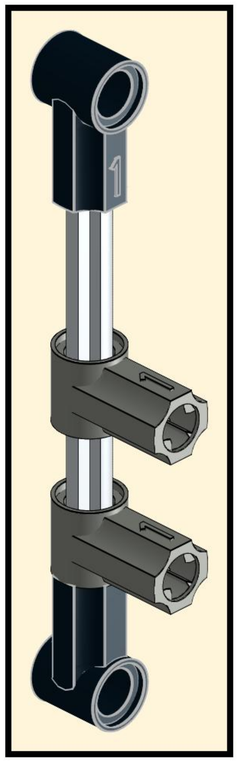

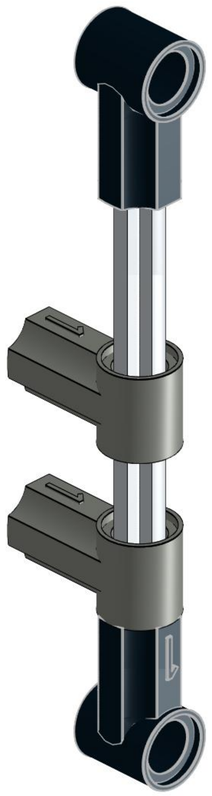

Five (5) of these assemblies will be constructed and attached in an identical manner.
All axles are 7L.

# 62

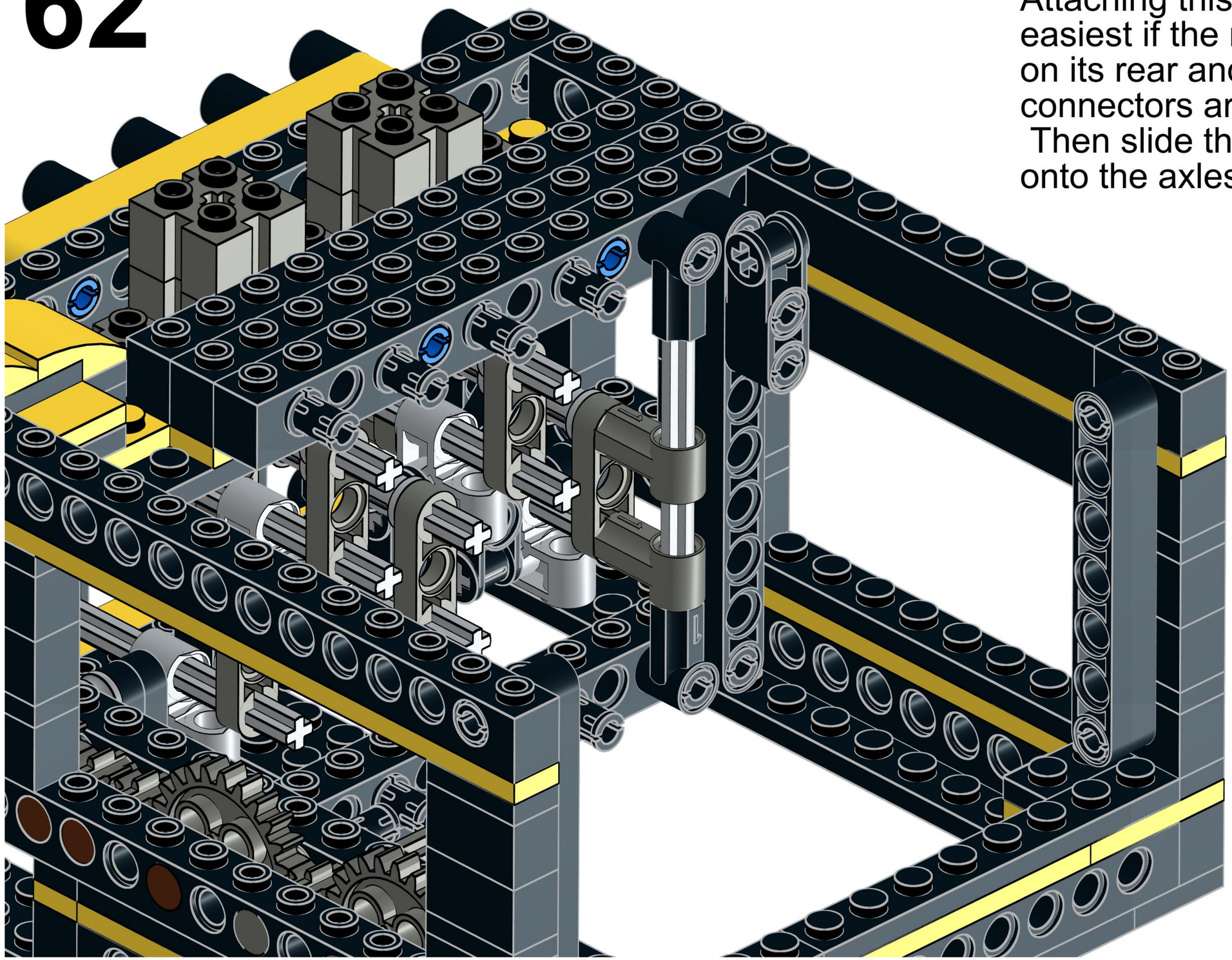

Note:

Attaching this assembly is easiest if the module is standing on its rear and the grey connectors are hanging vertically. Then slide the assembly down onto the axles.

# 63

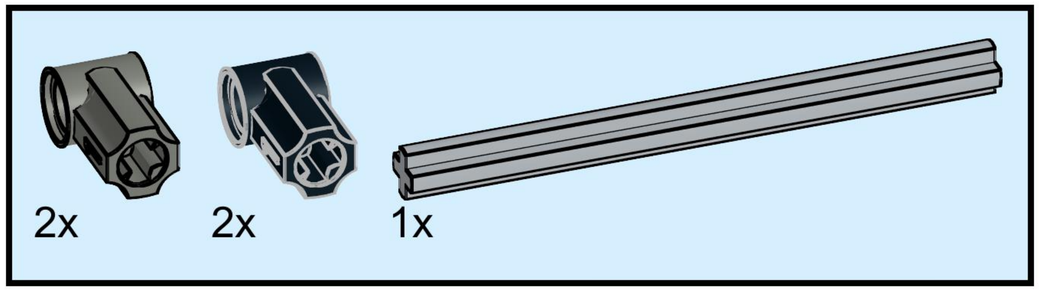


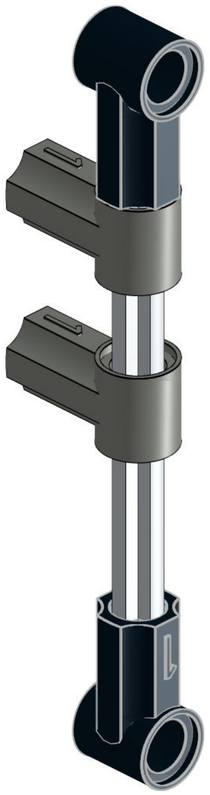

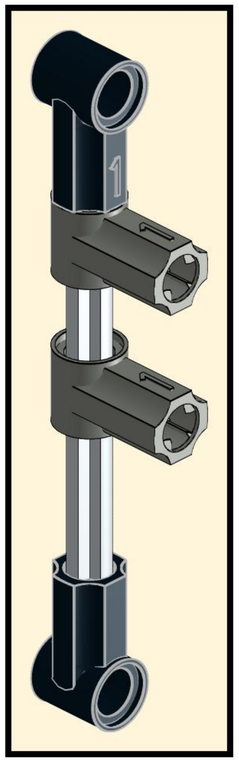

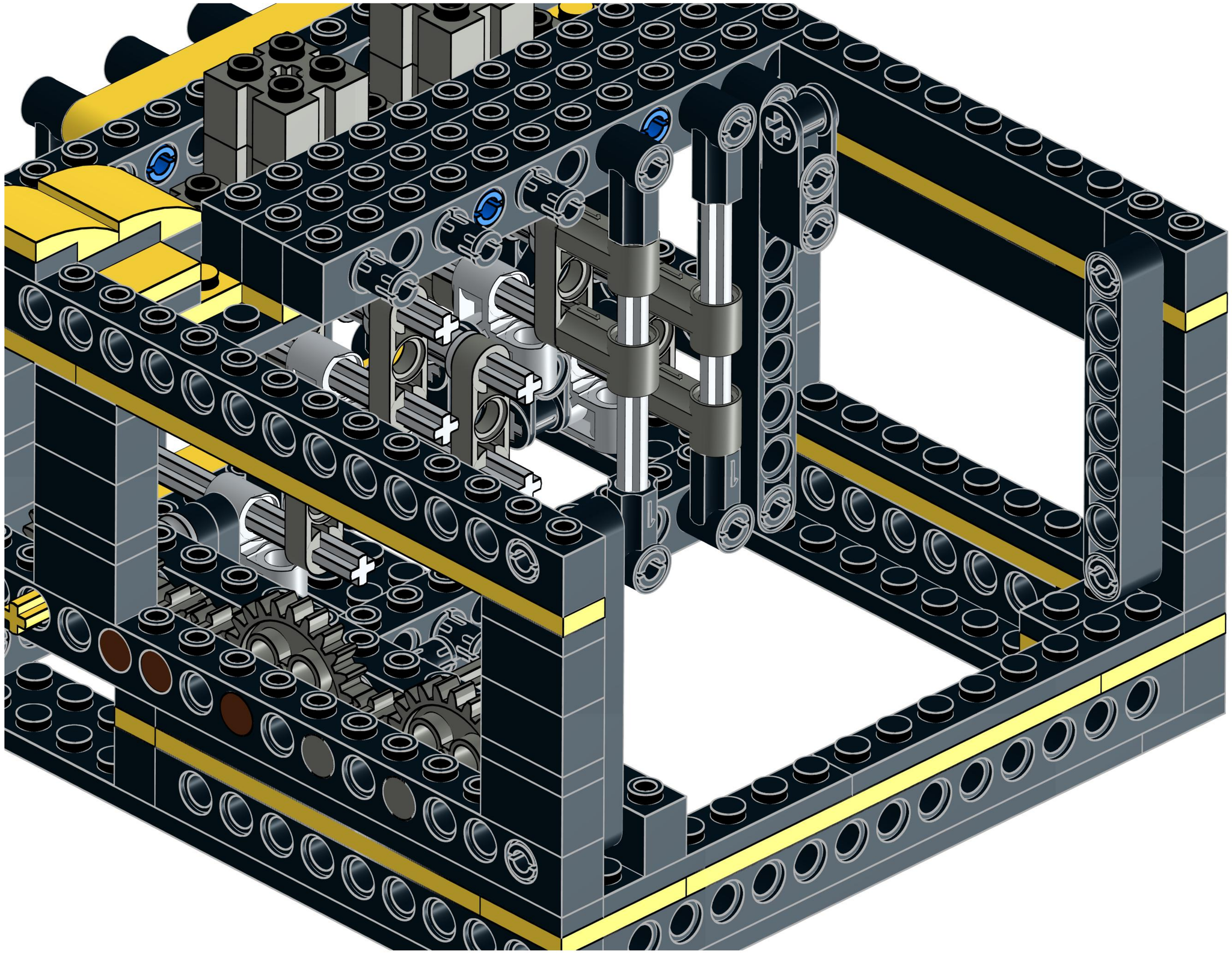

# 65

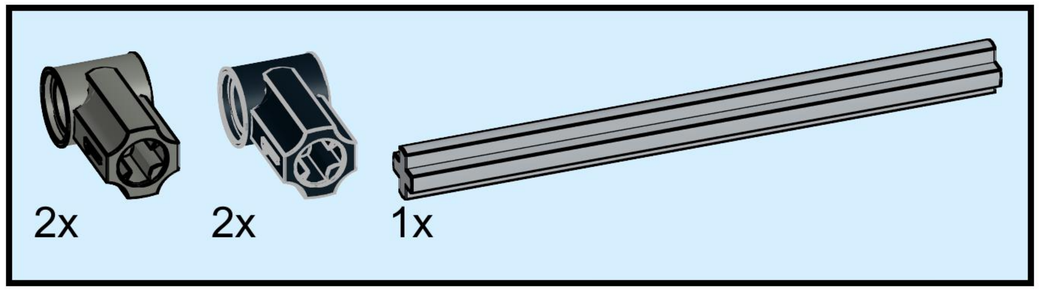


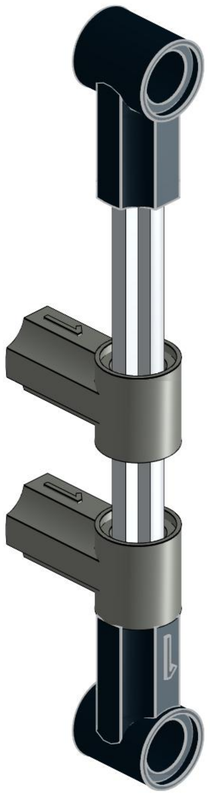

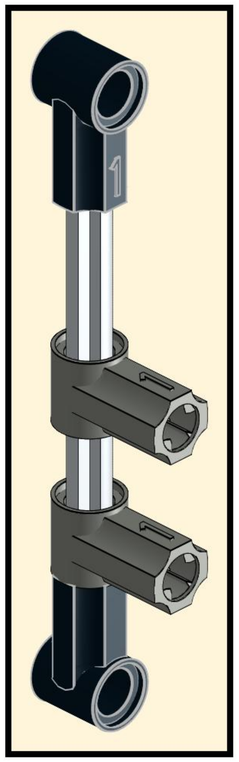

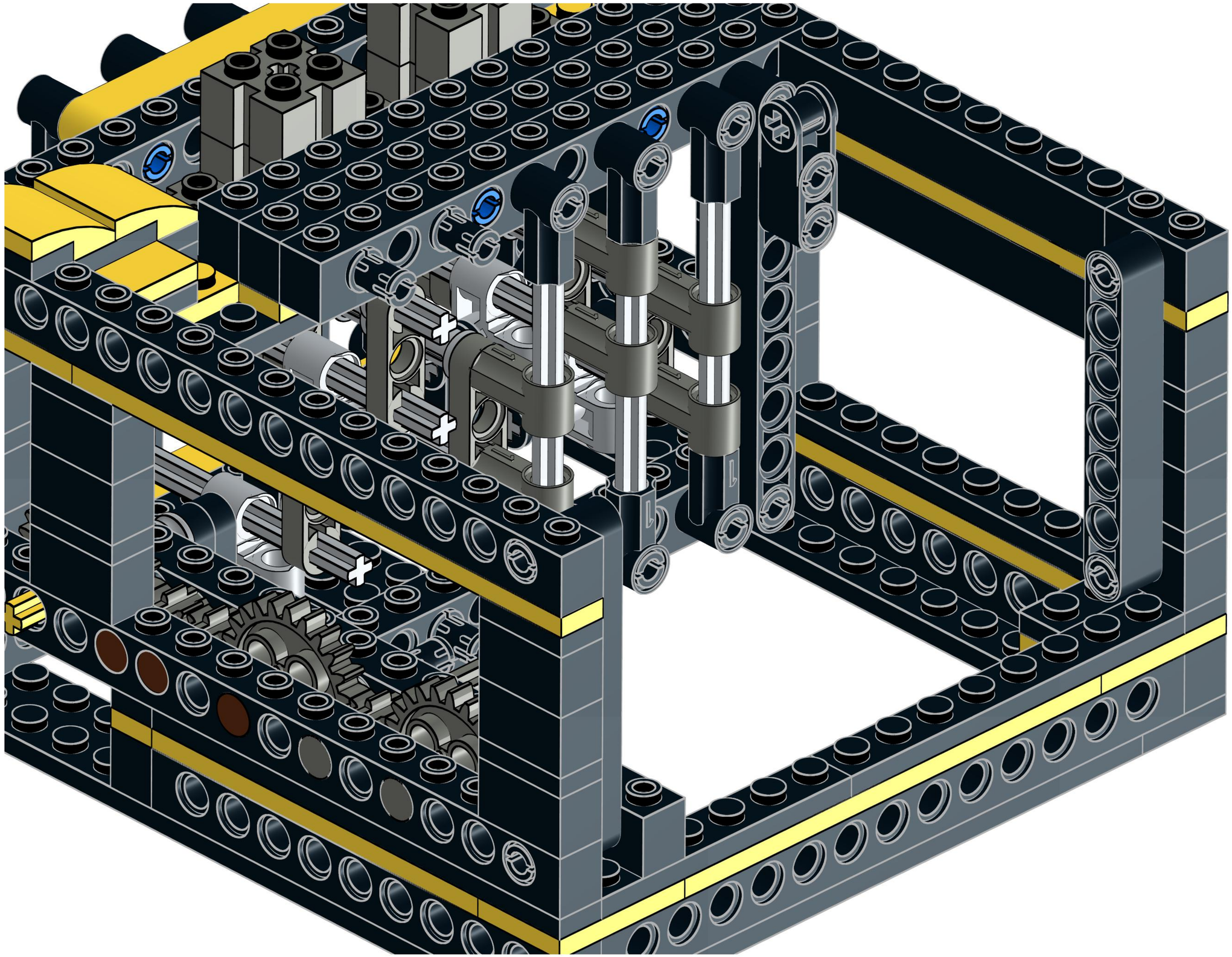

# 67

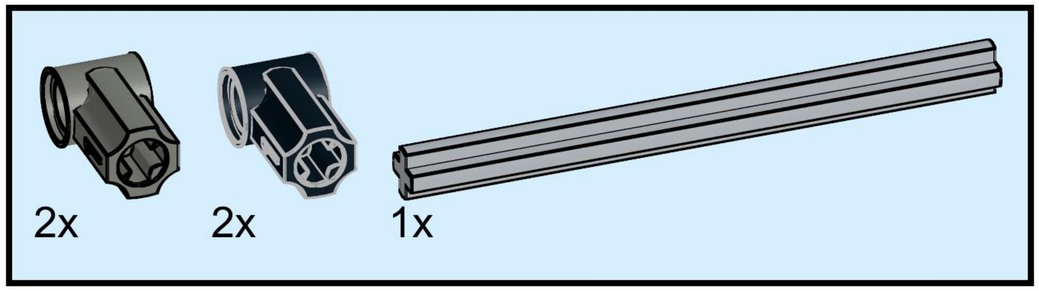


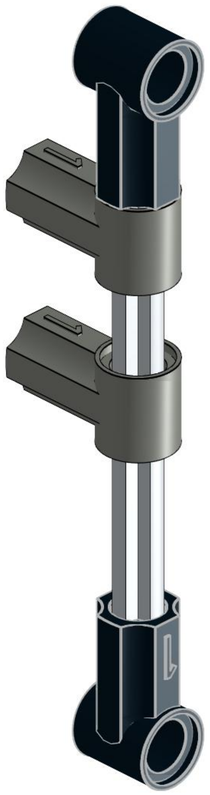

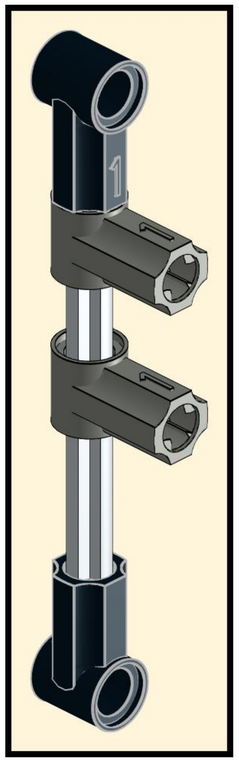

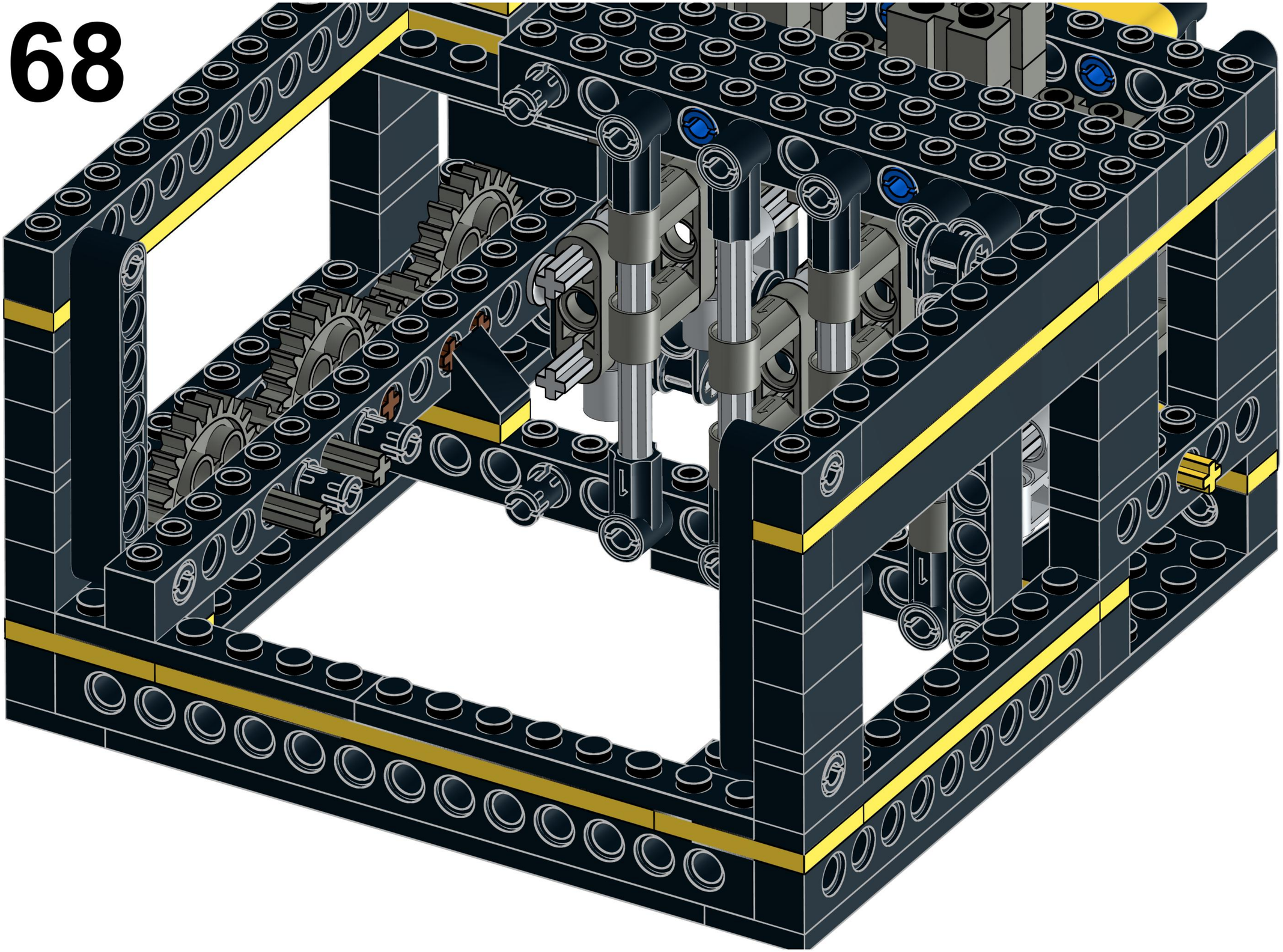

# 69

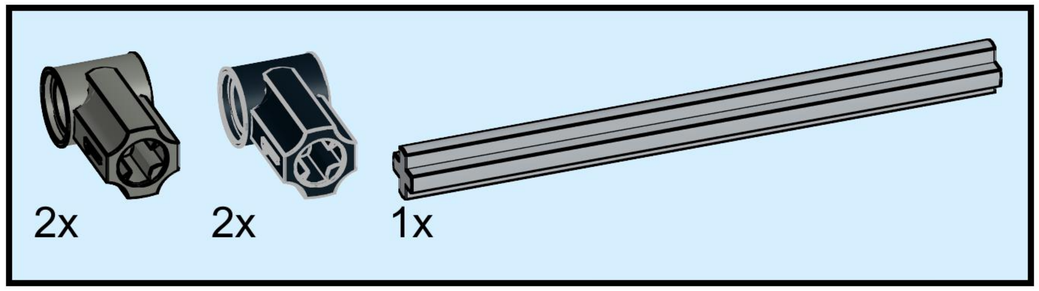


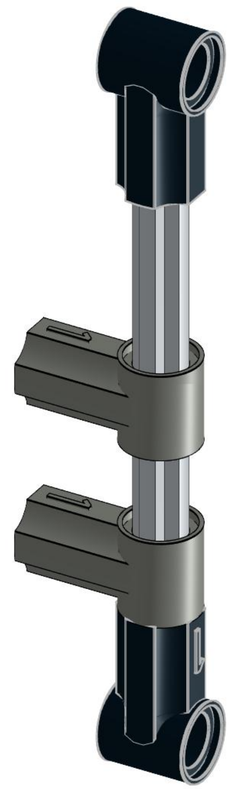

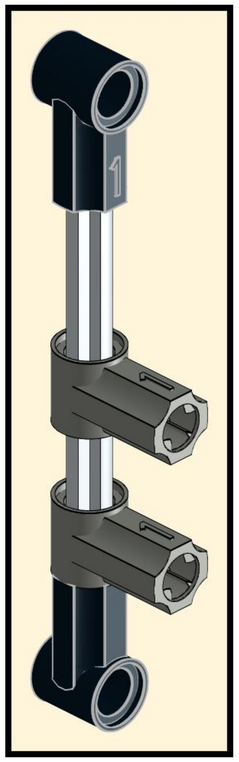

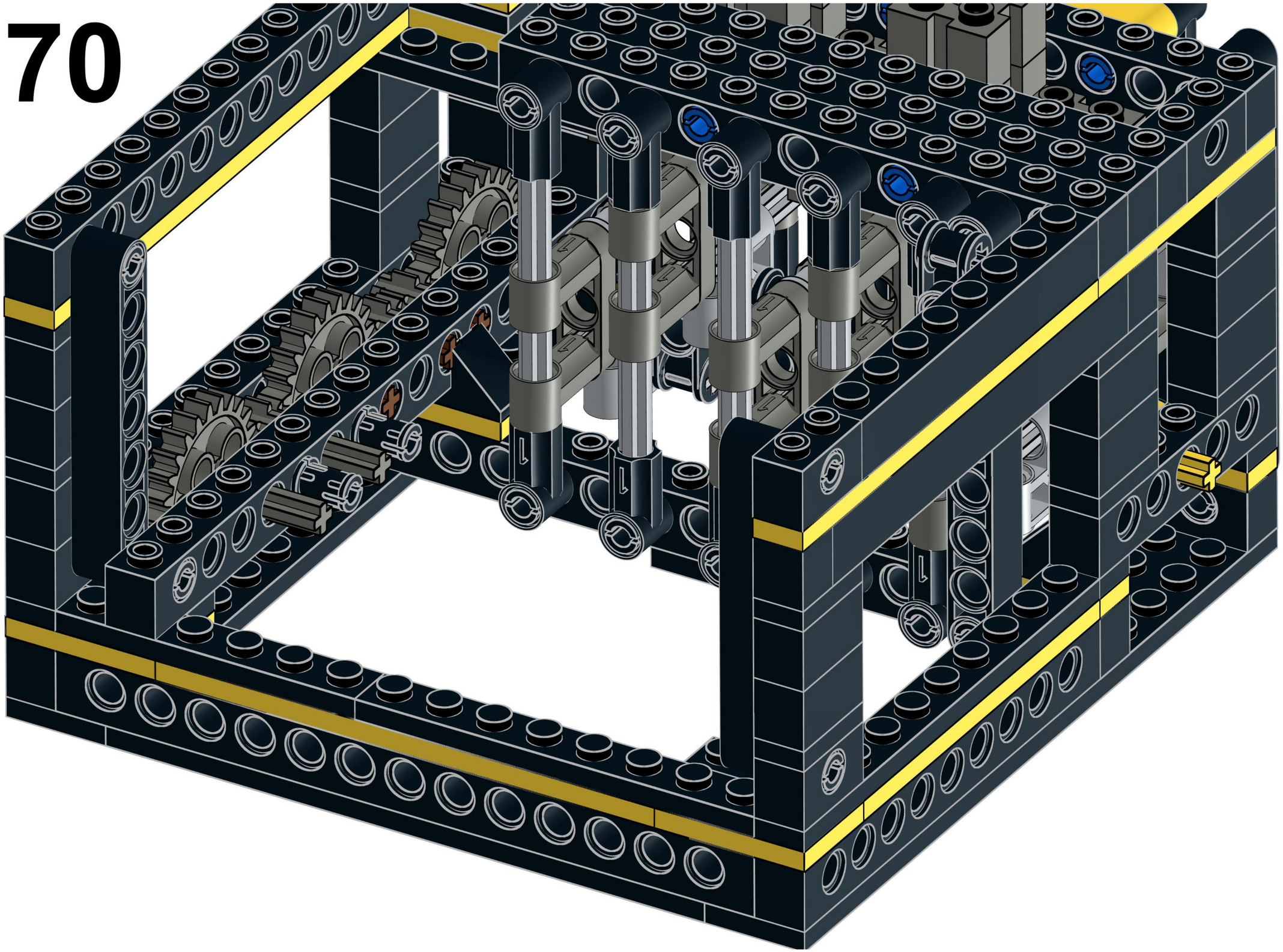

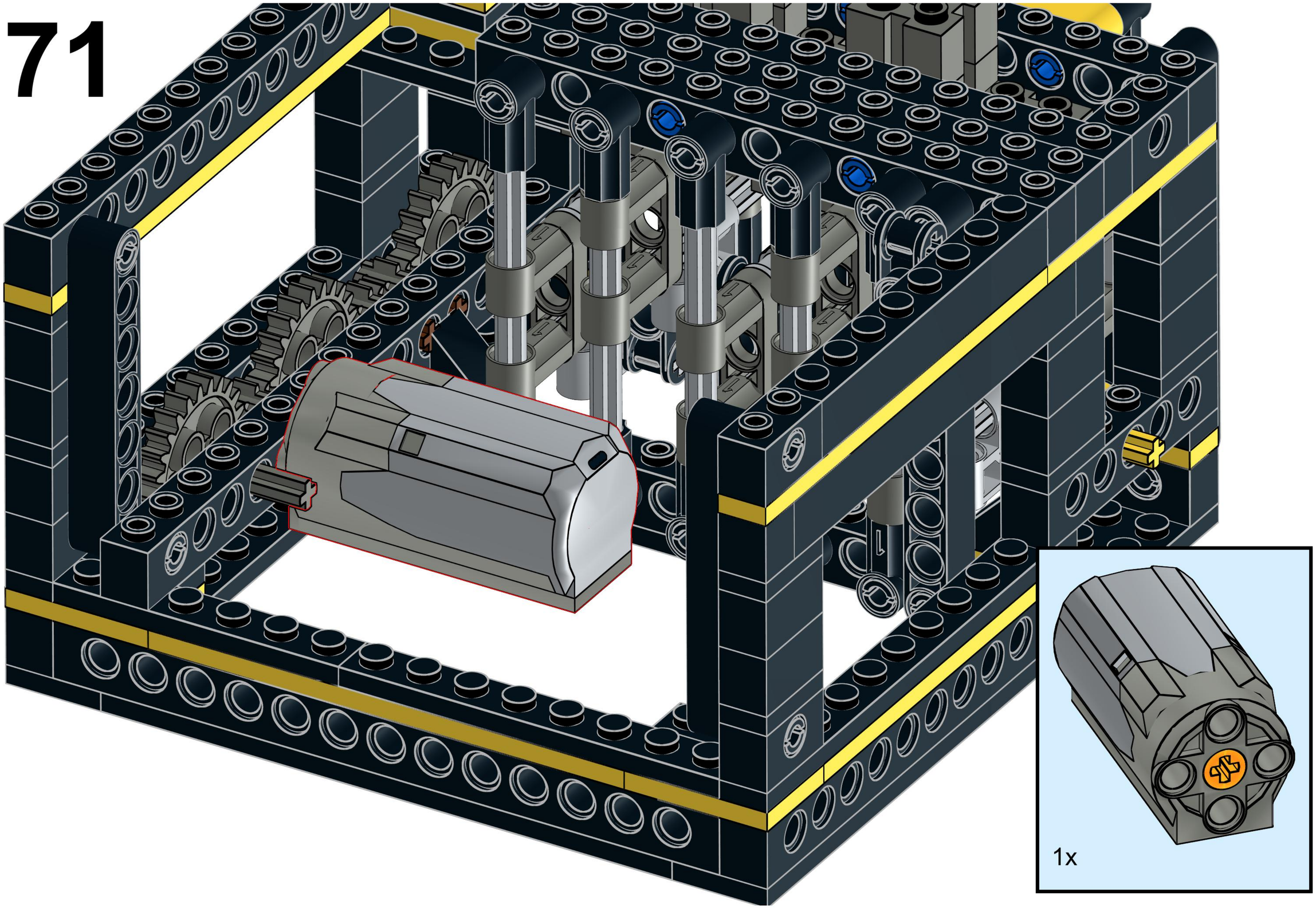
1x

# 72

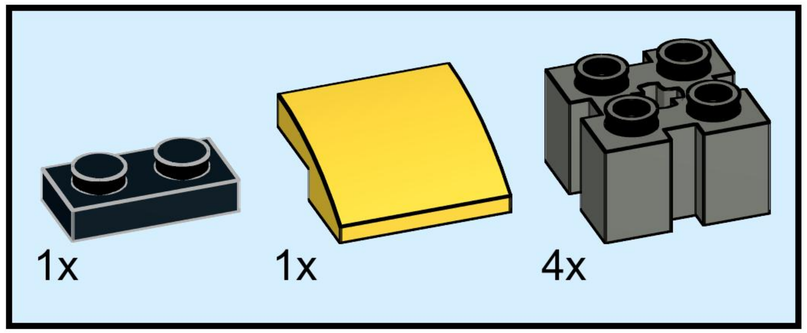


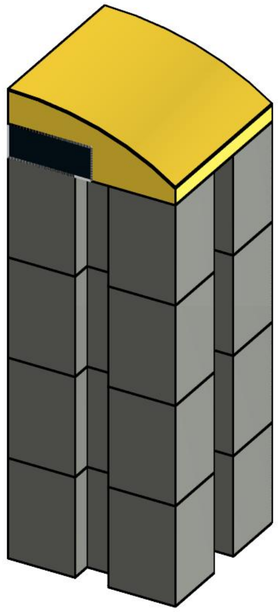

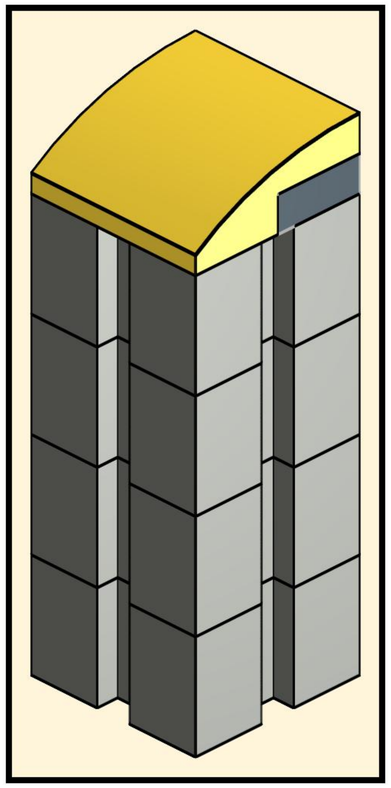

# 73

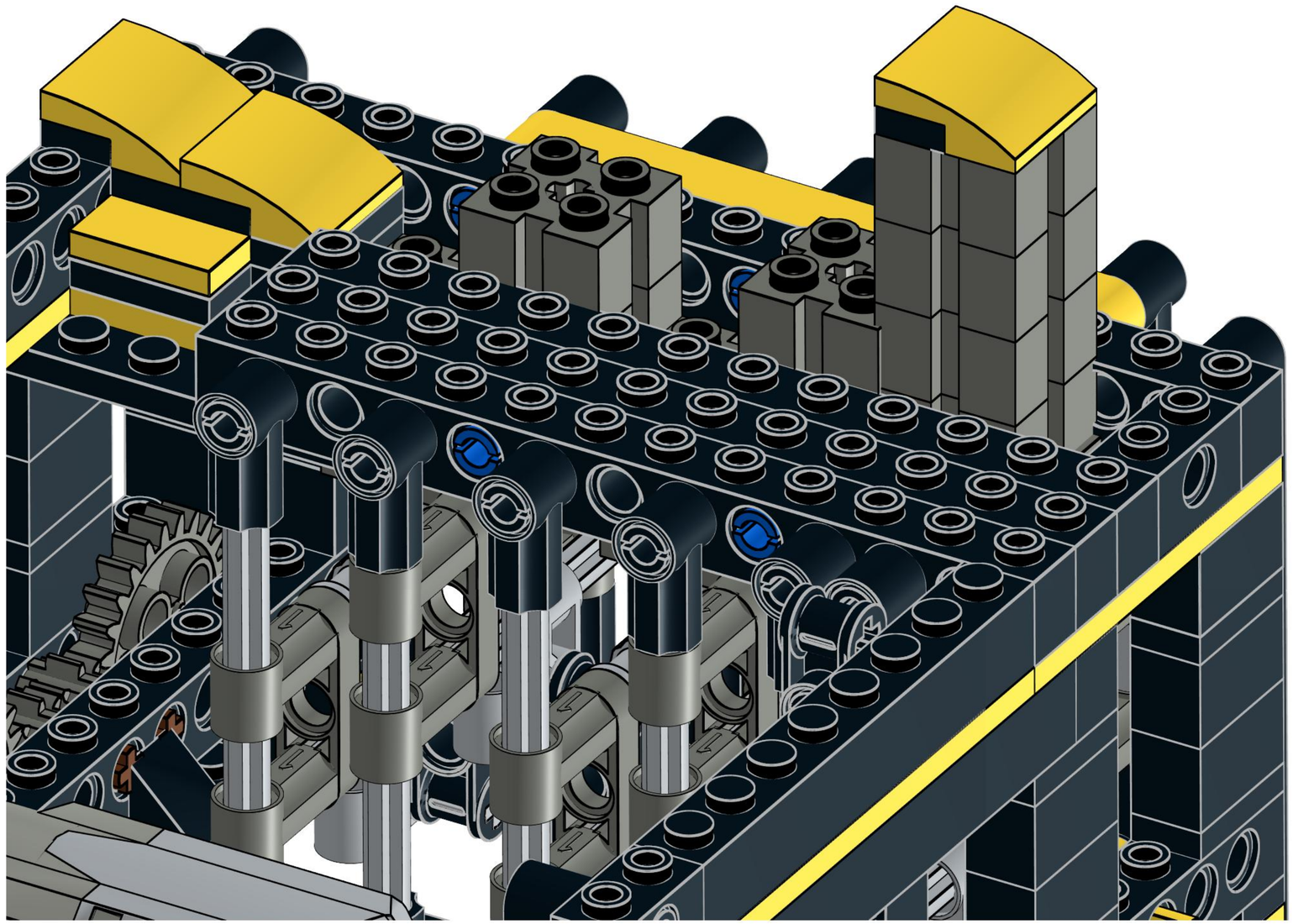

# 74

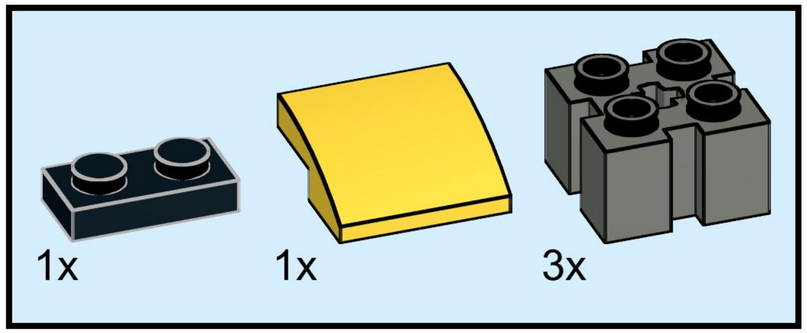


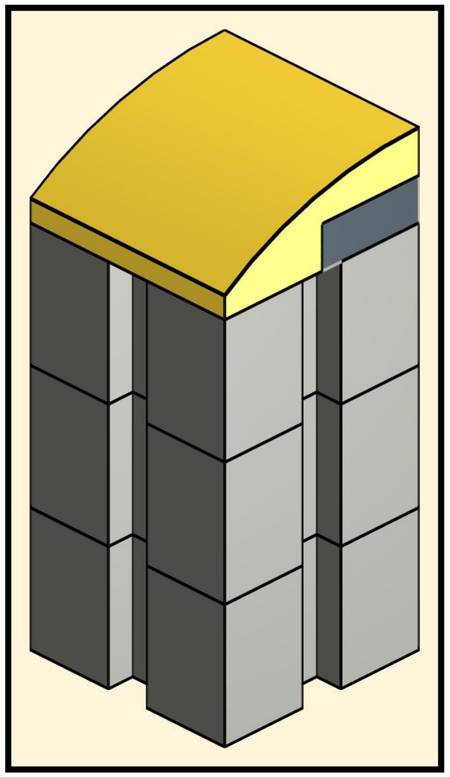

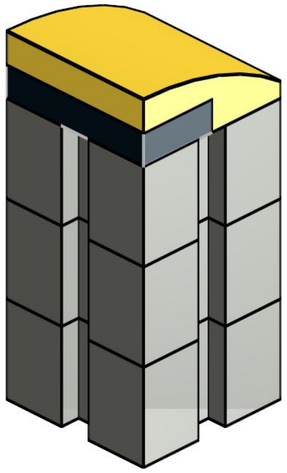

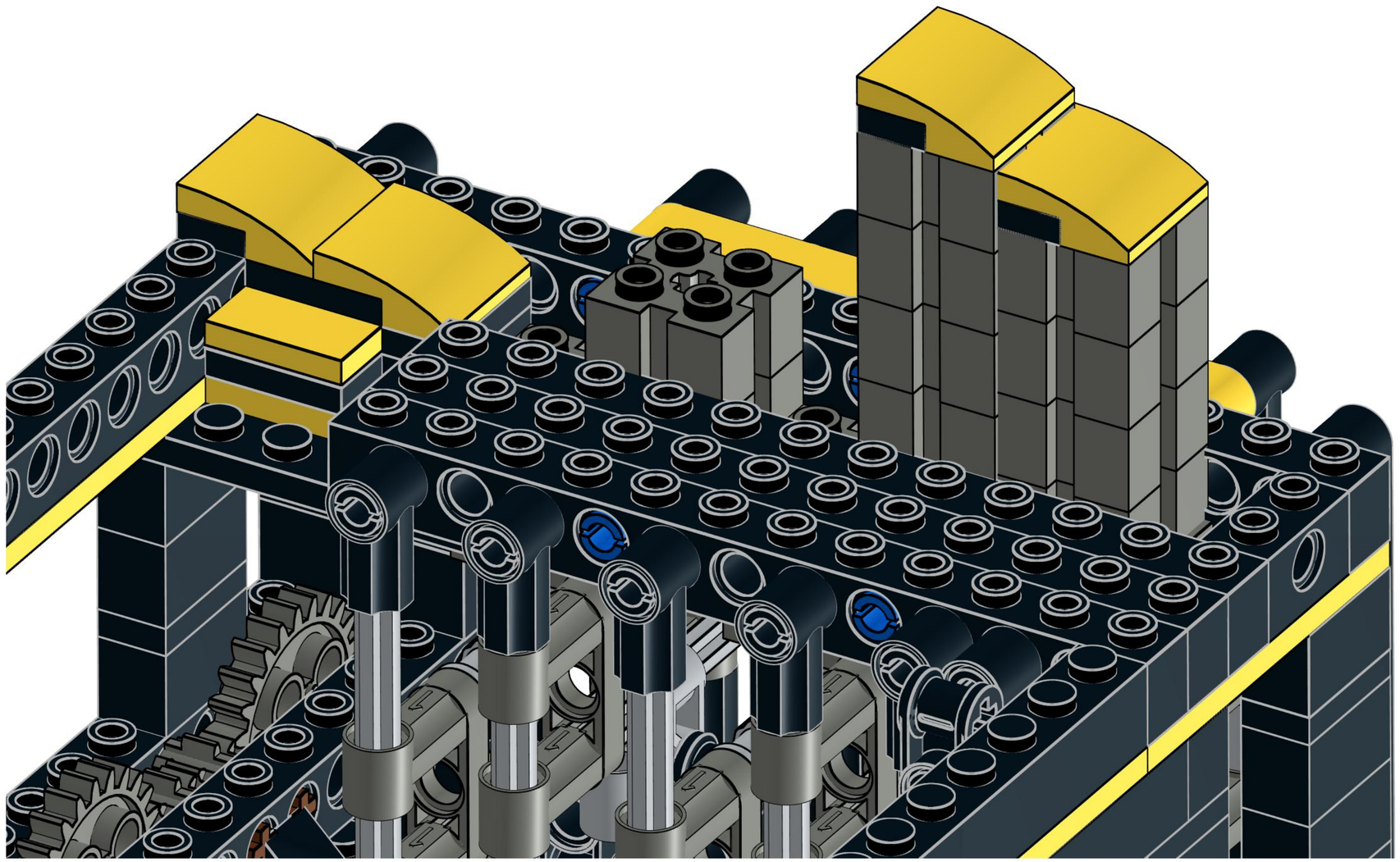

# 76

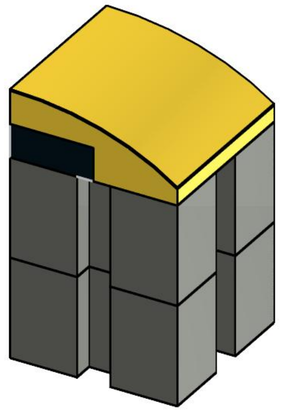

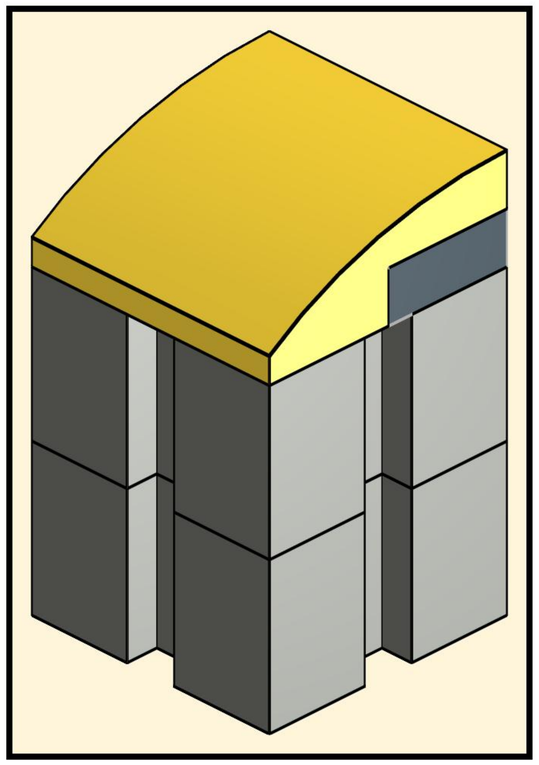

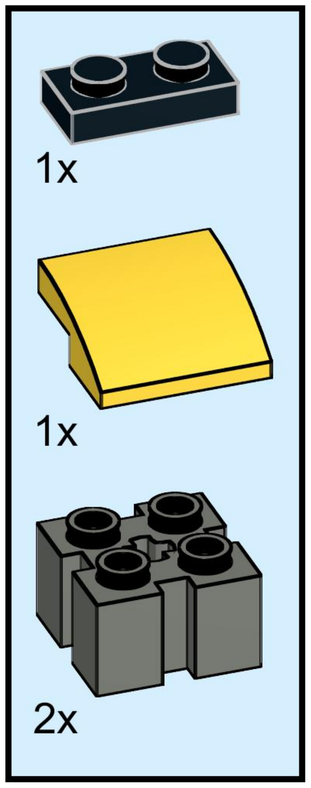

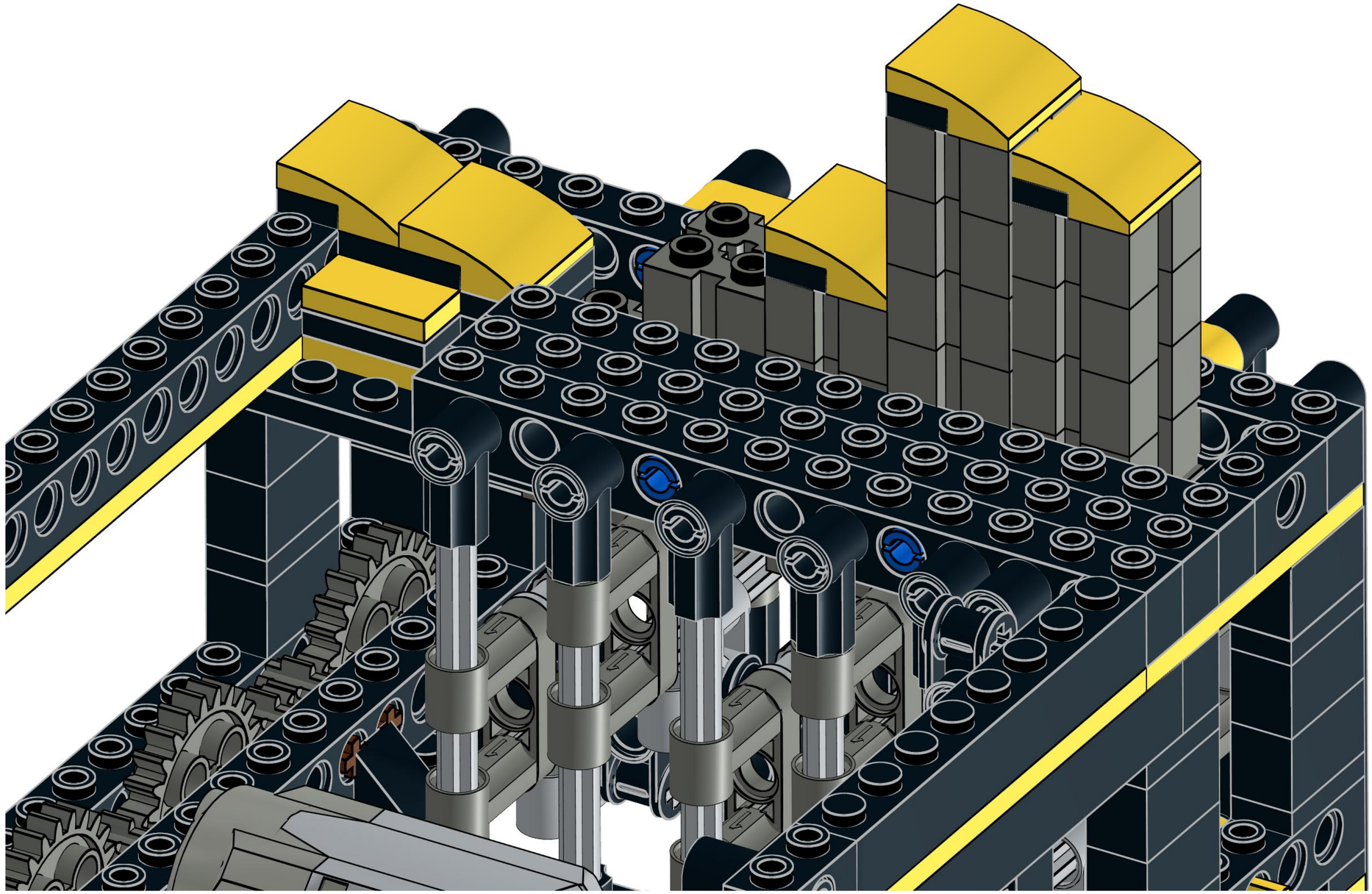

# 78

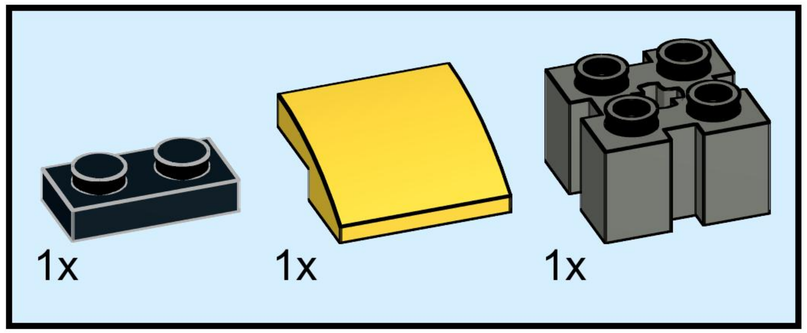


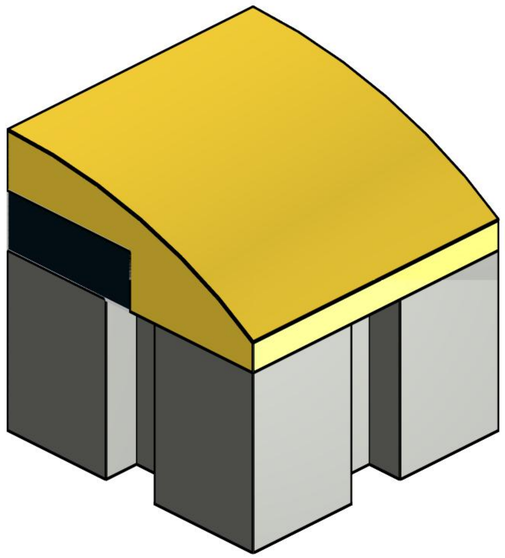

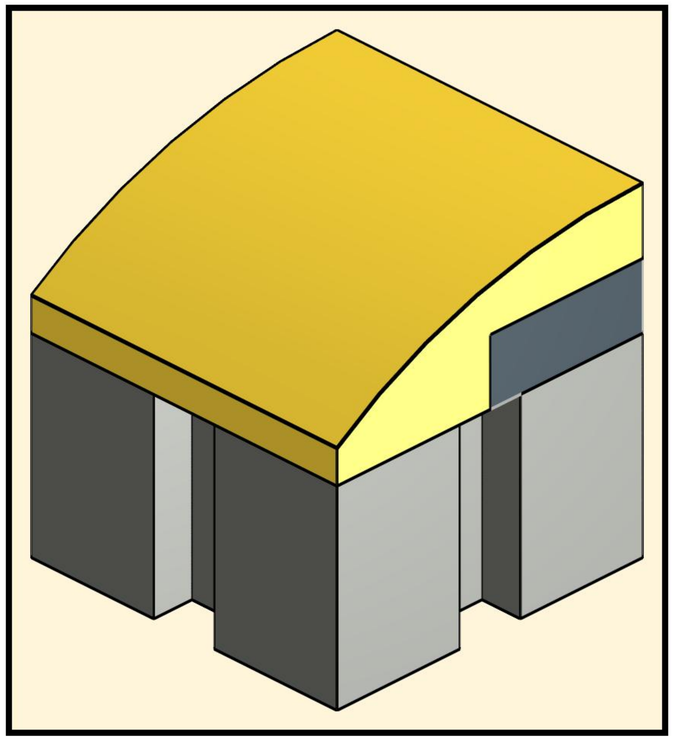

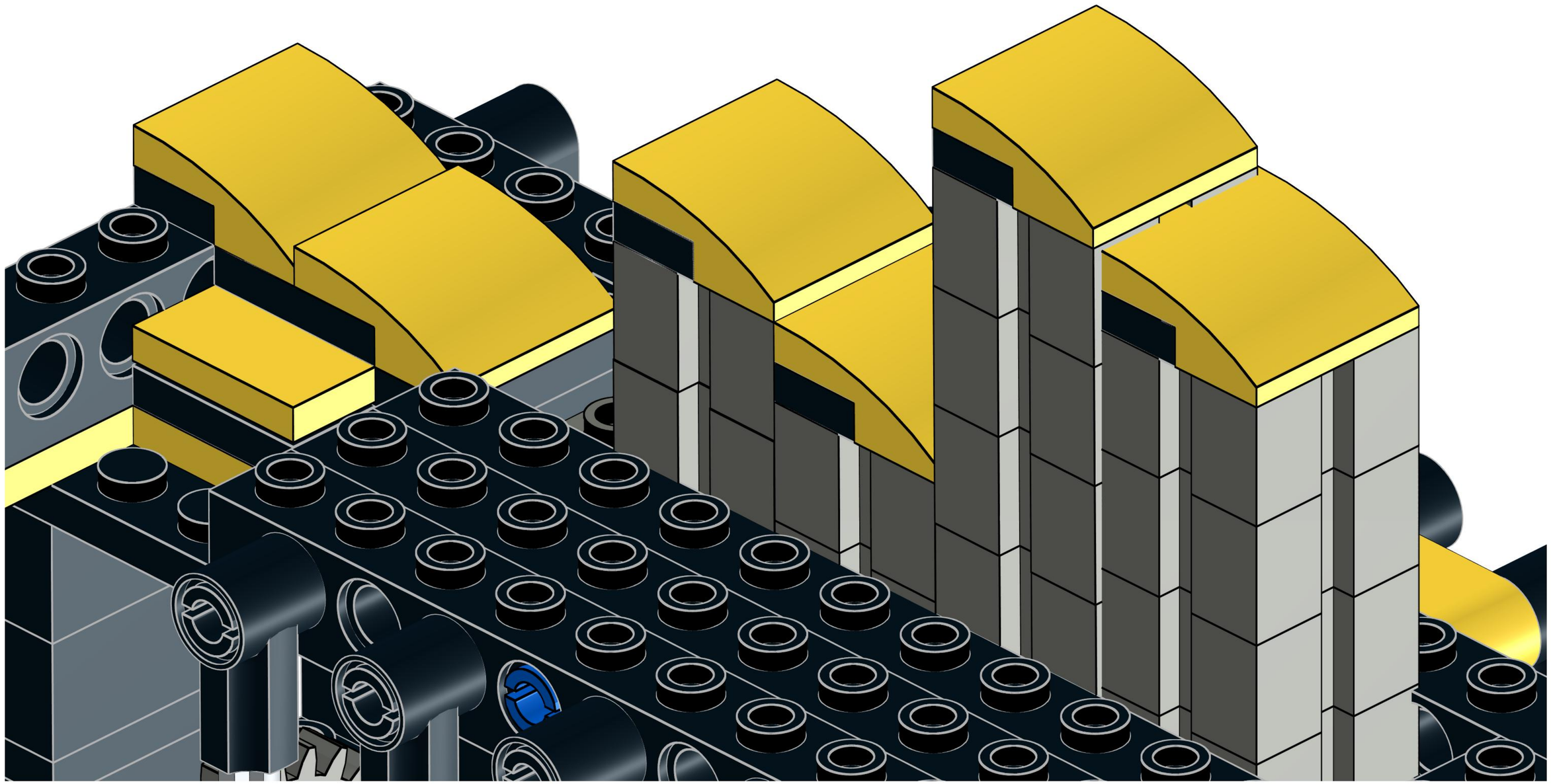

# 80

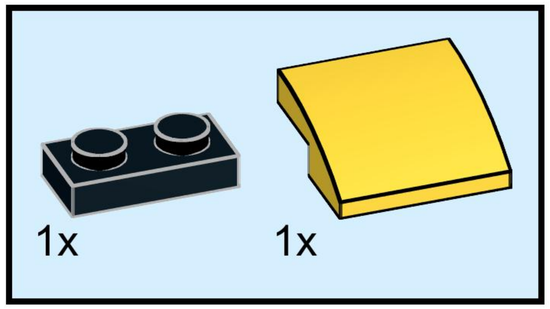


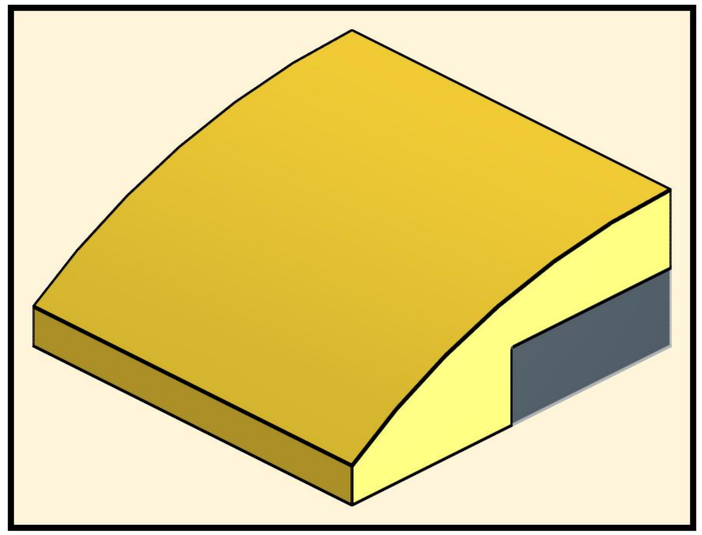

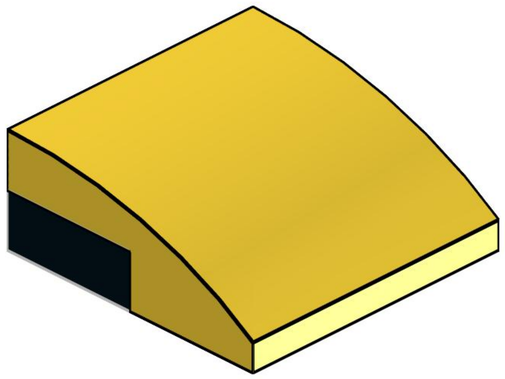

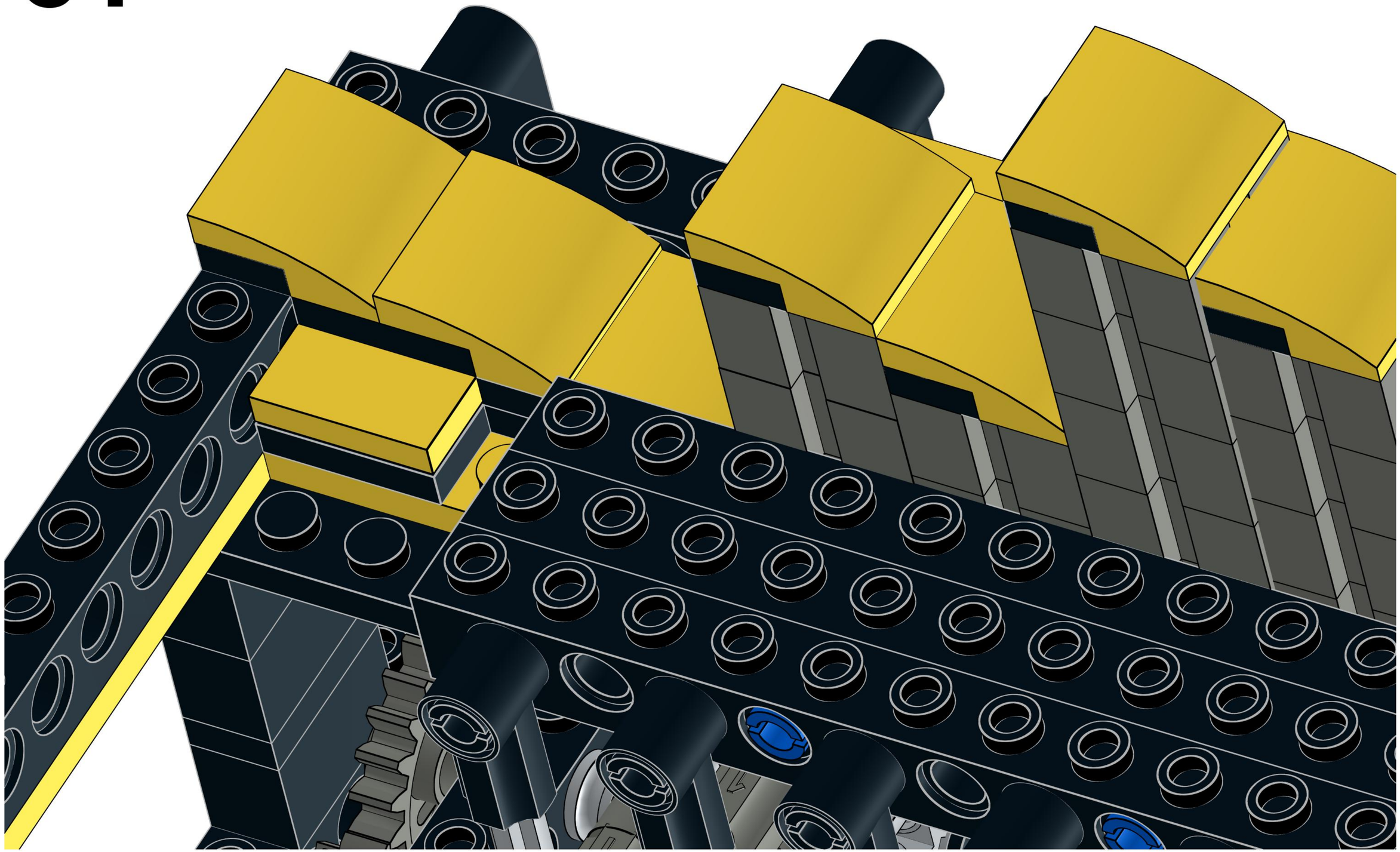

# 82

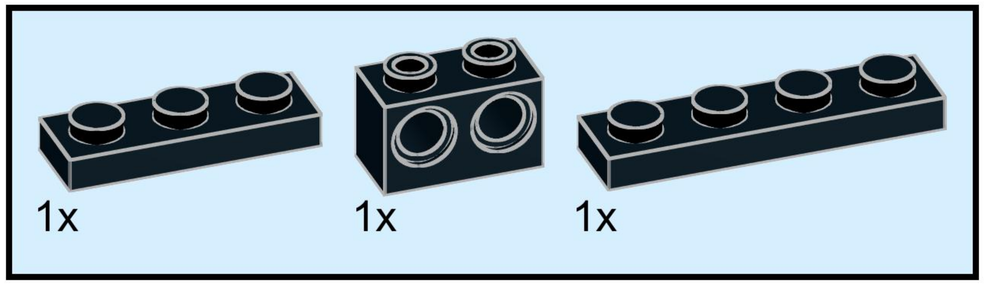


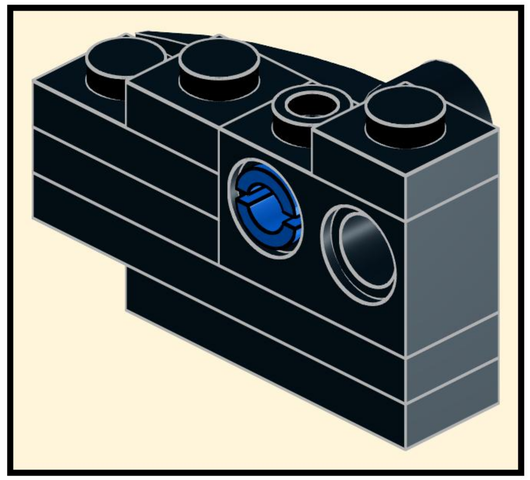

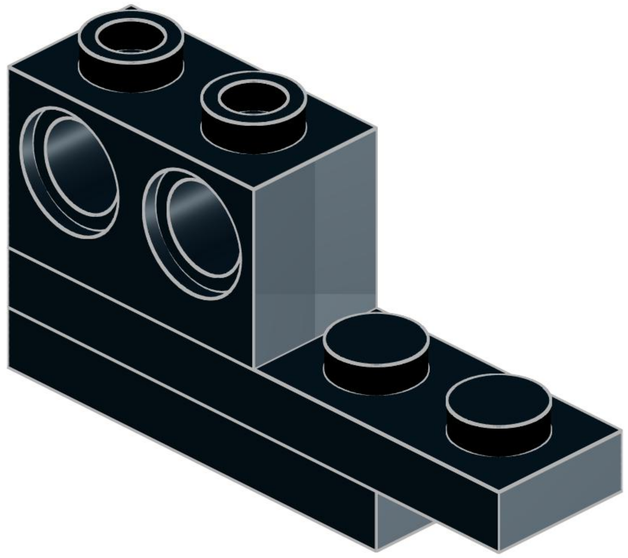

# 83

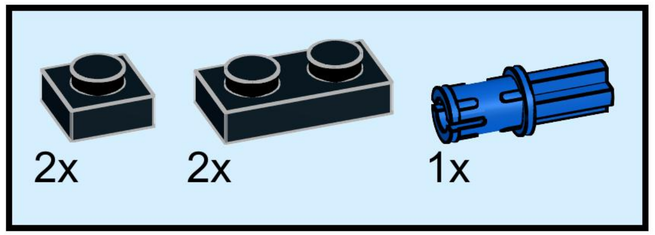


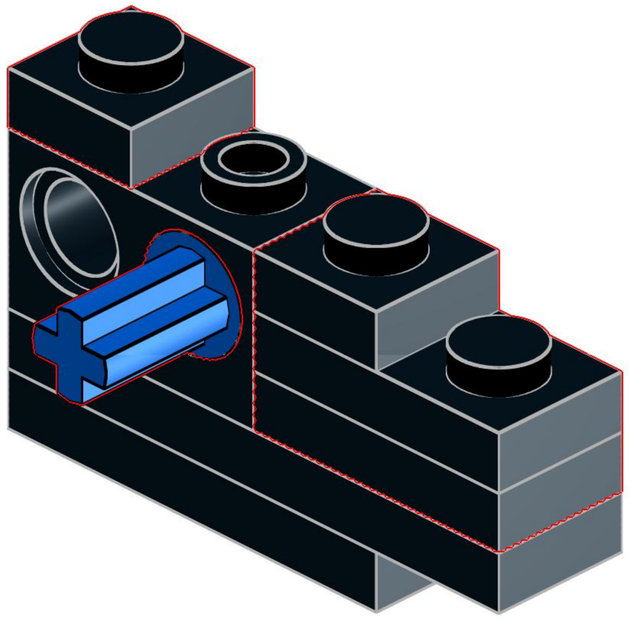

# 84

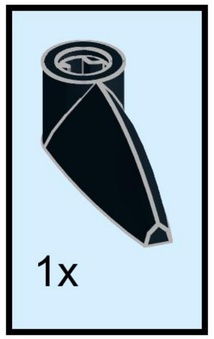


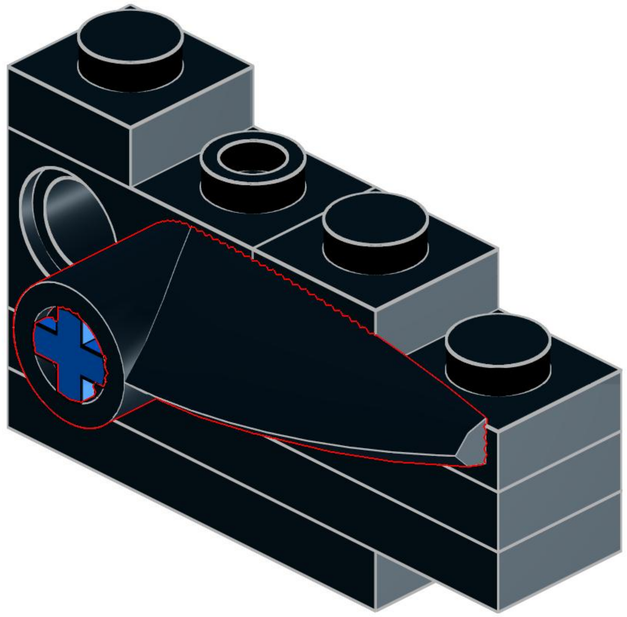

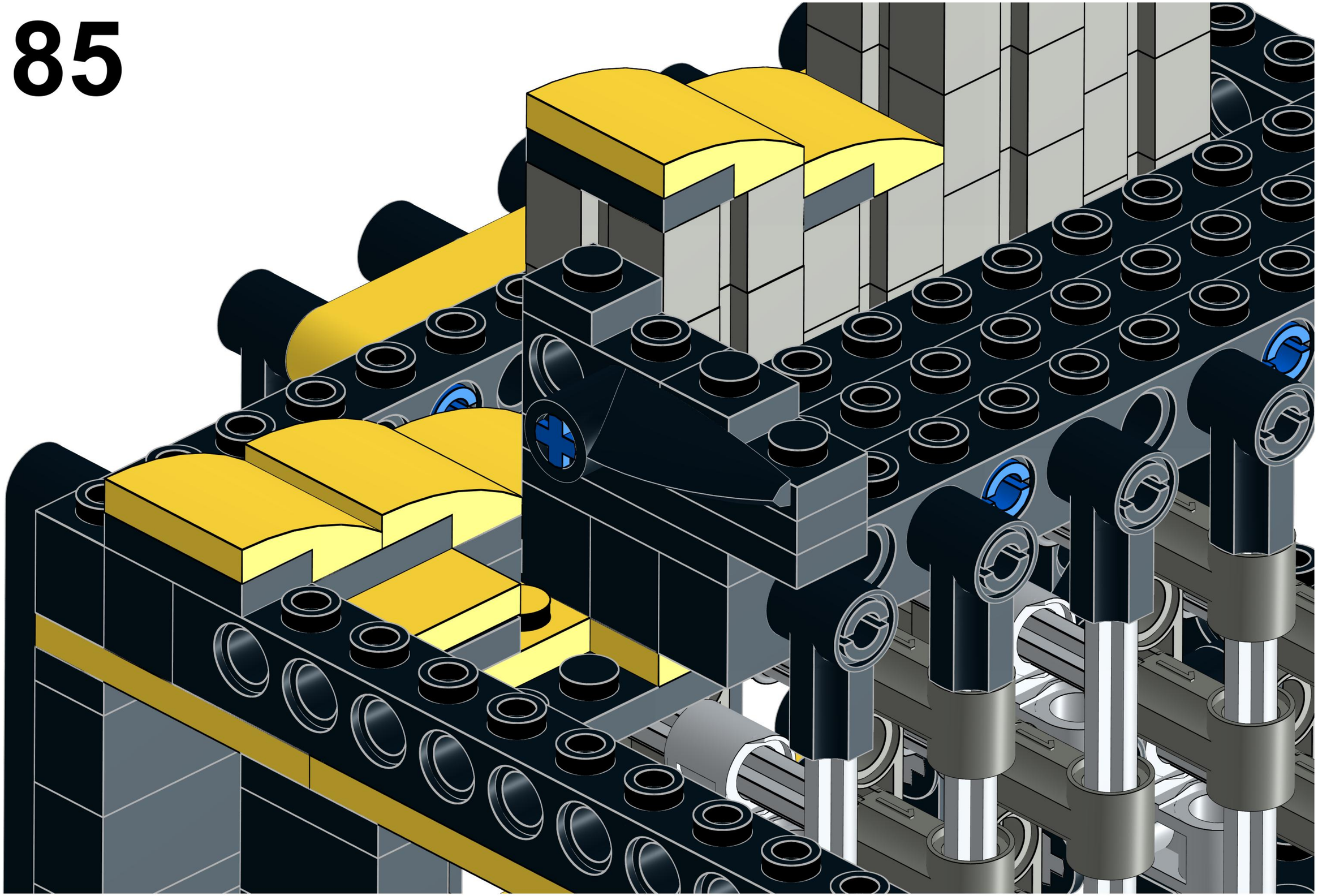

# 86

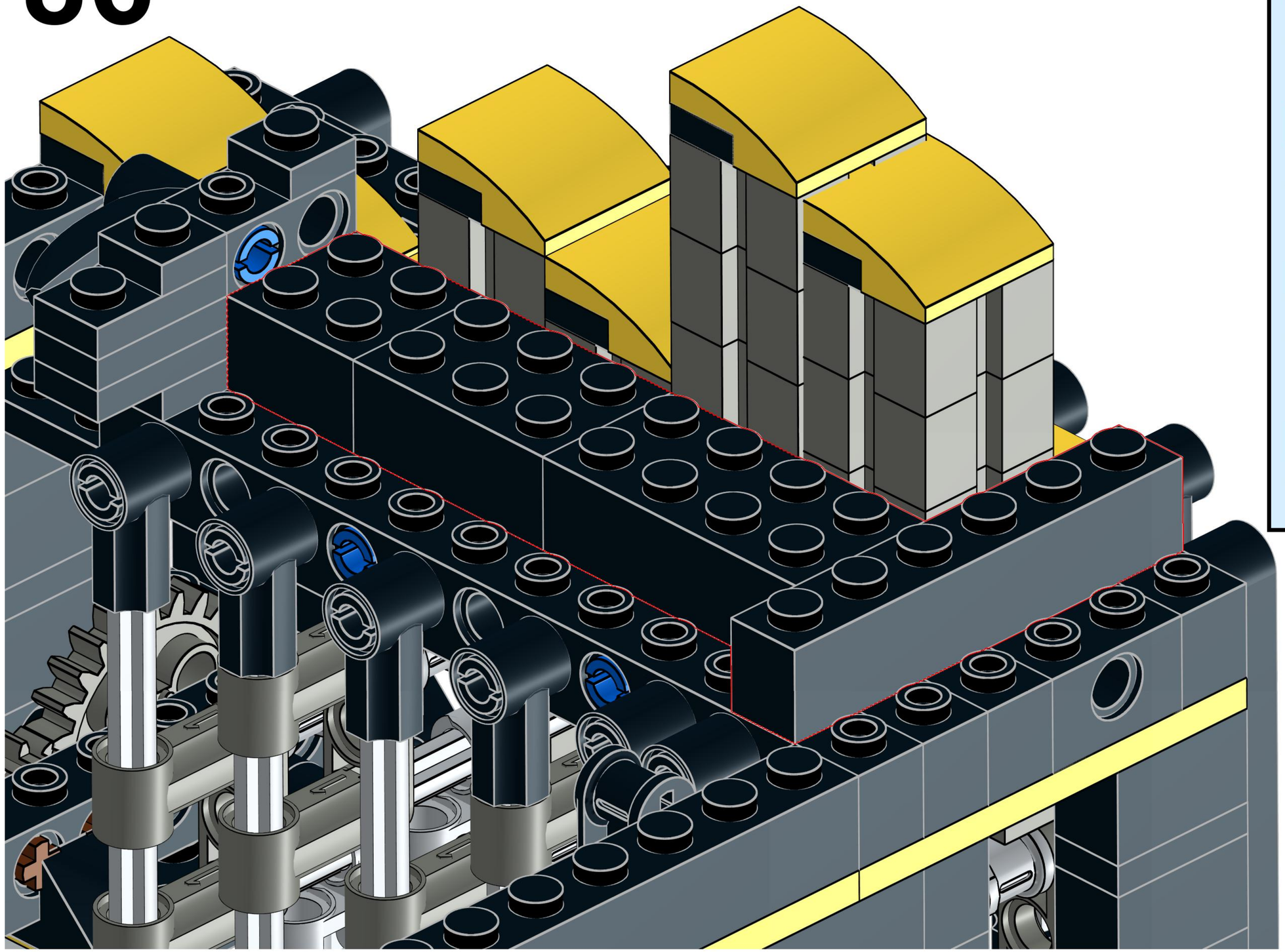

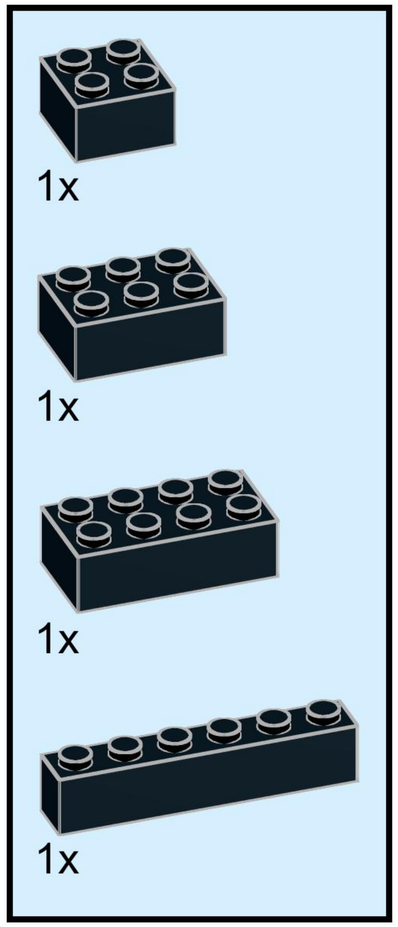

# 87

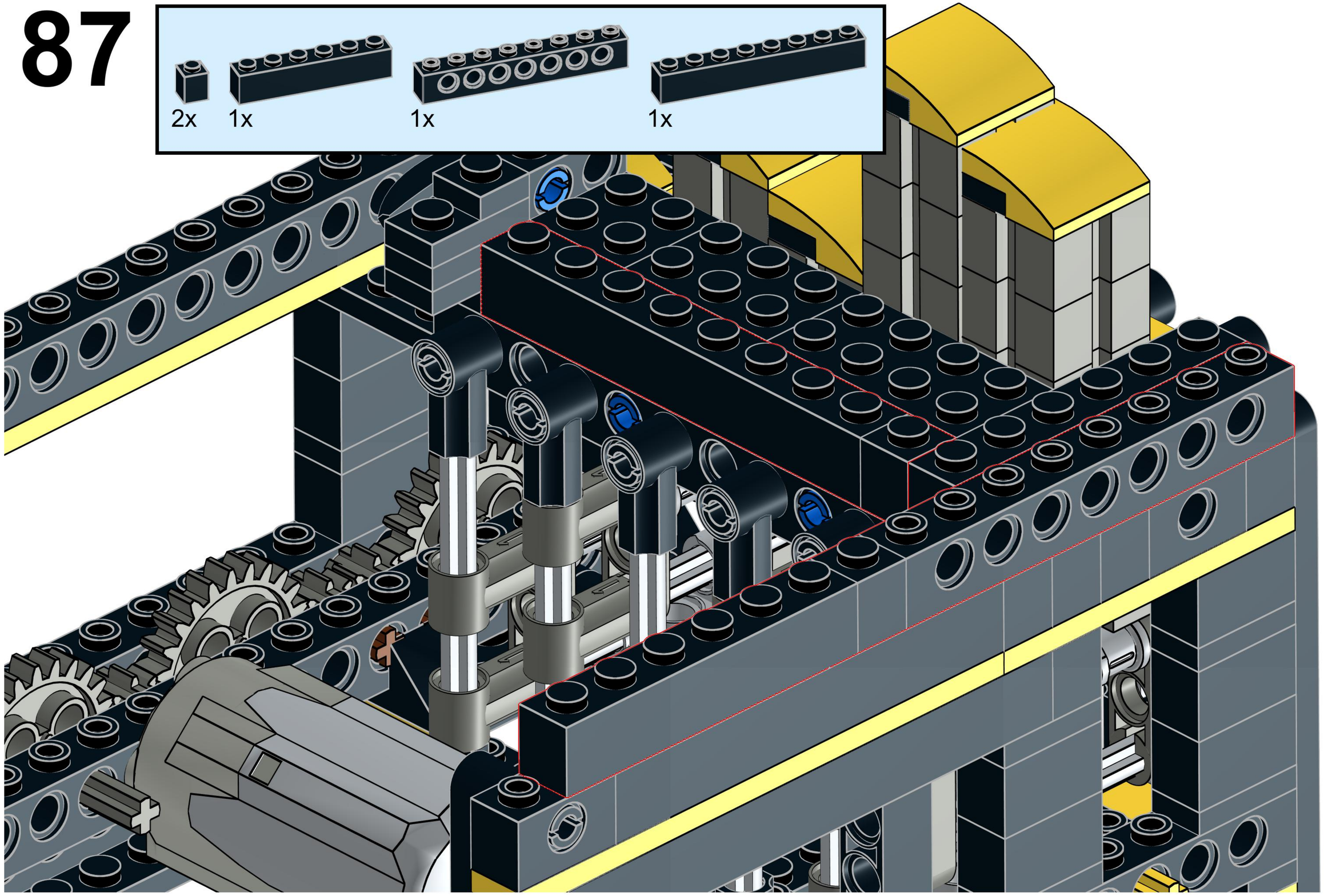

# 88

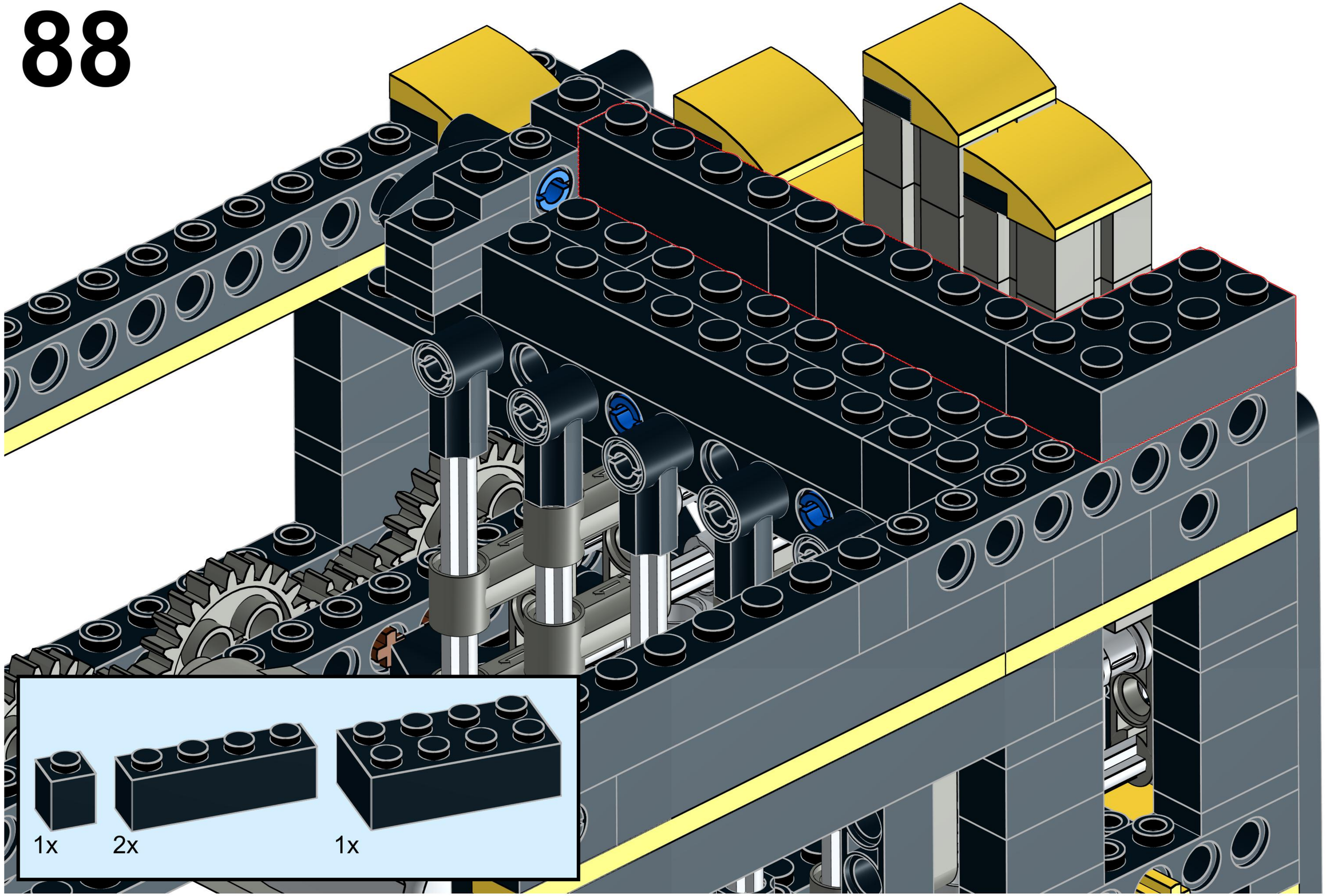

# 89

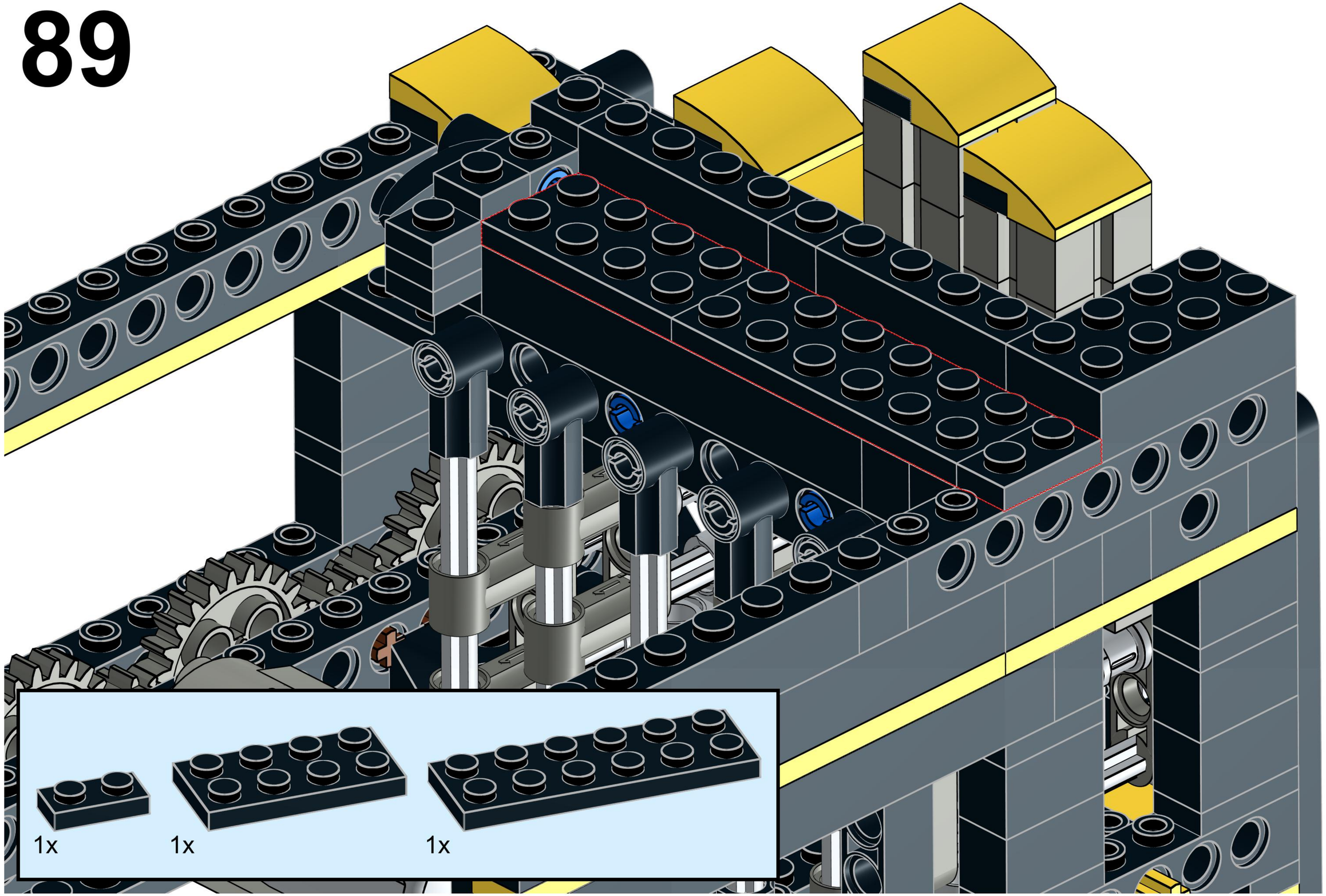

# 90

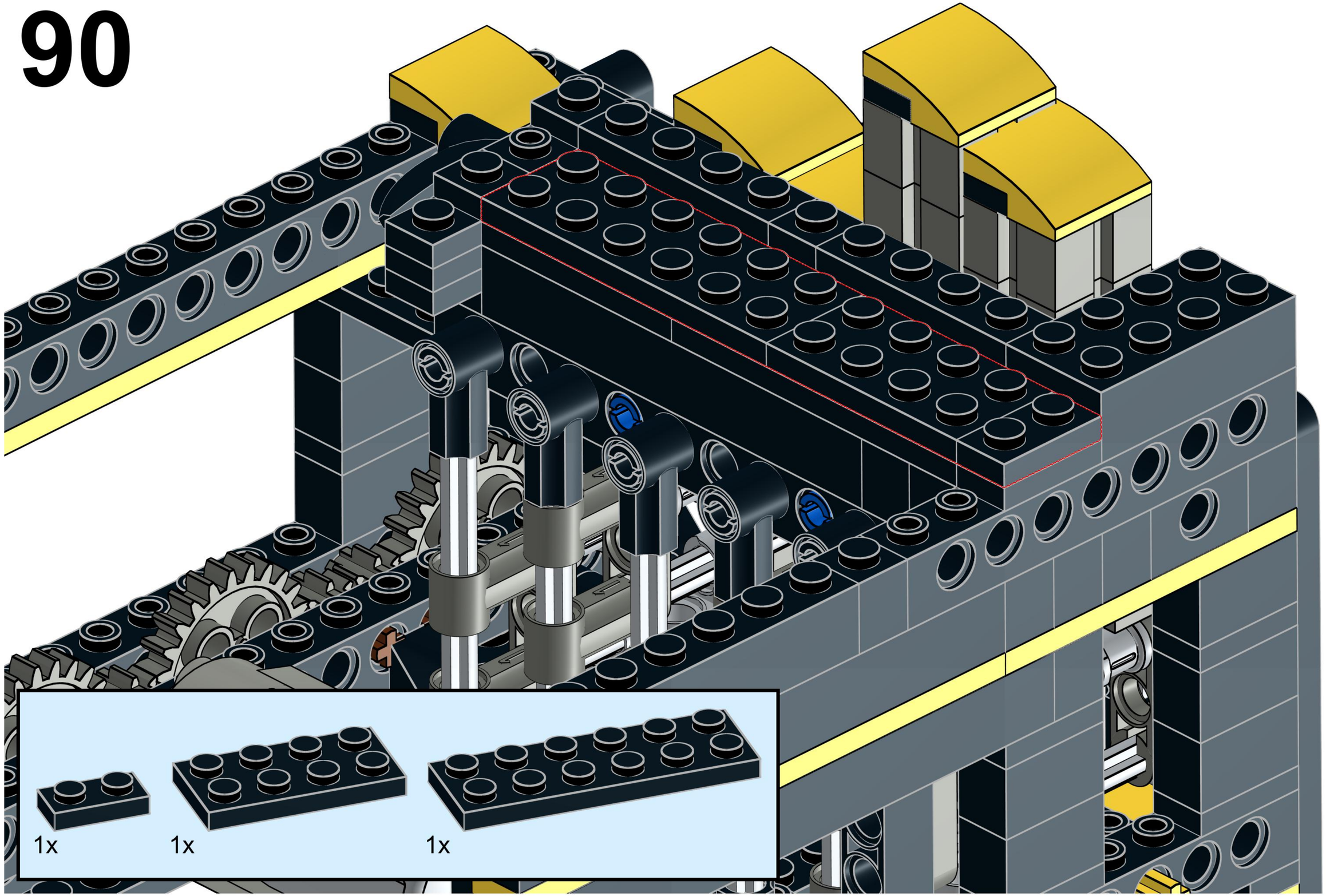

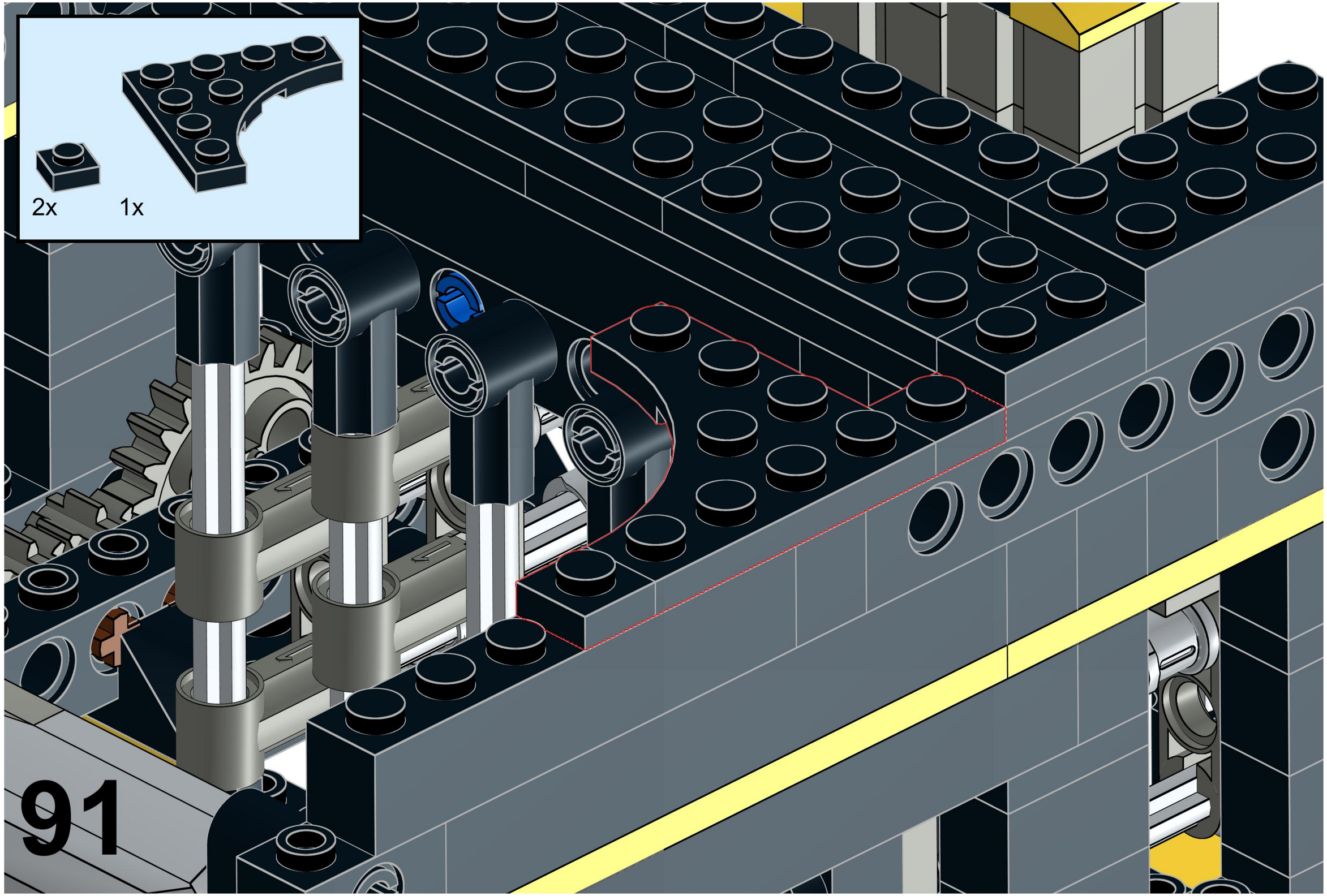
2x
1x
91

# 92

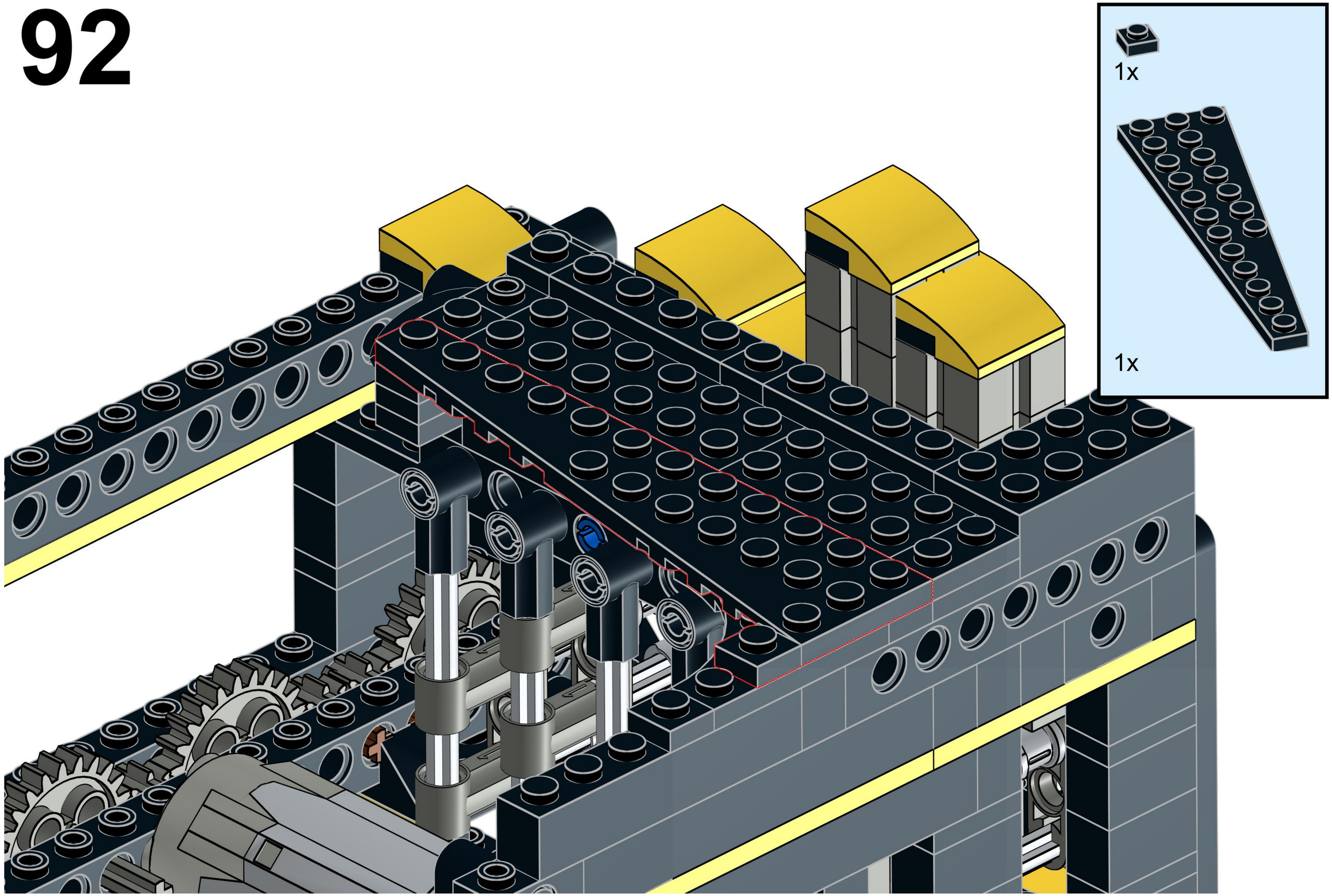

# 93

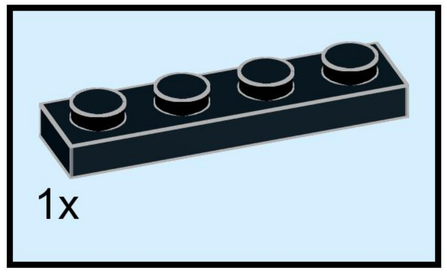


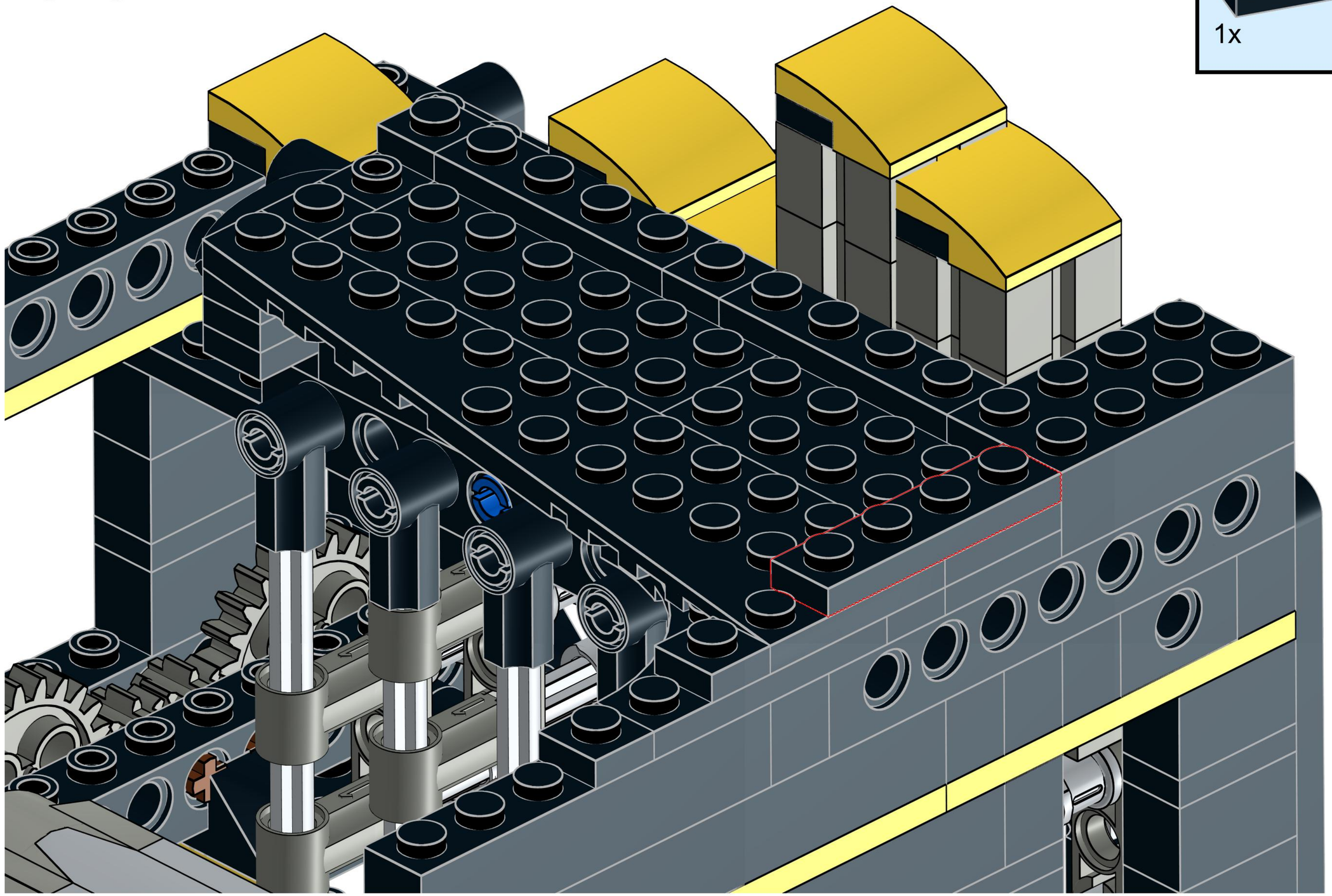

# 94

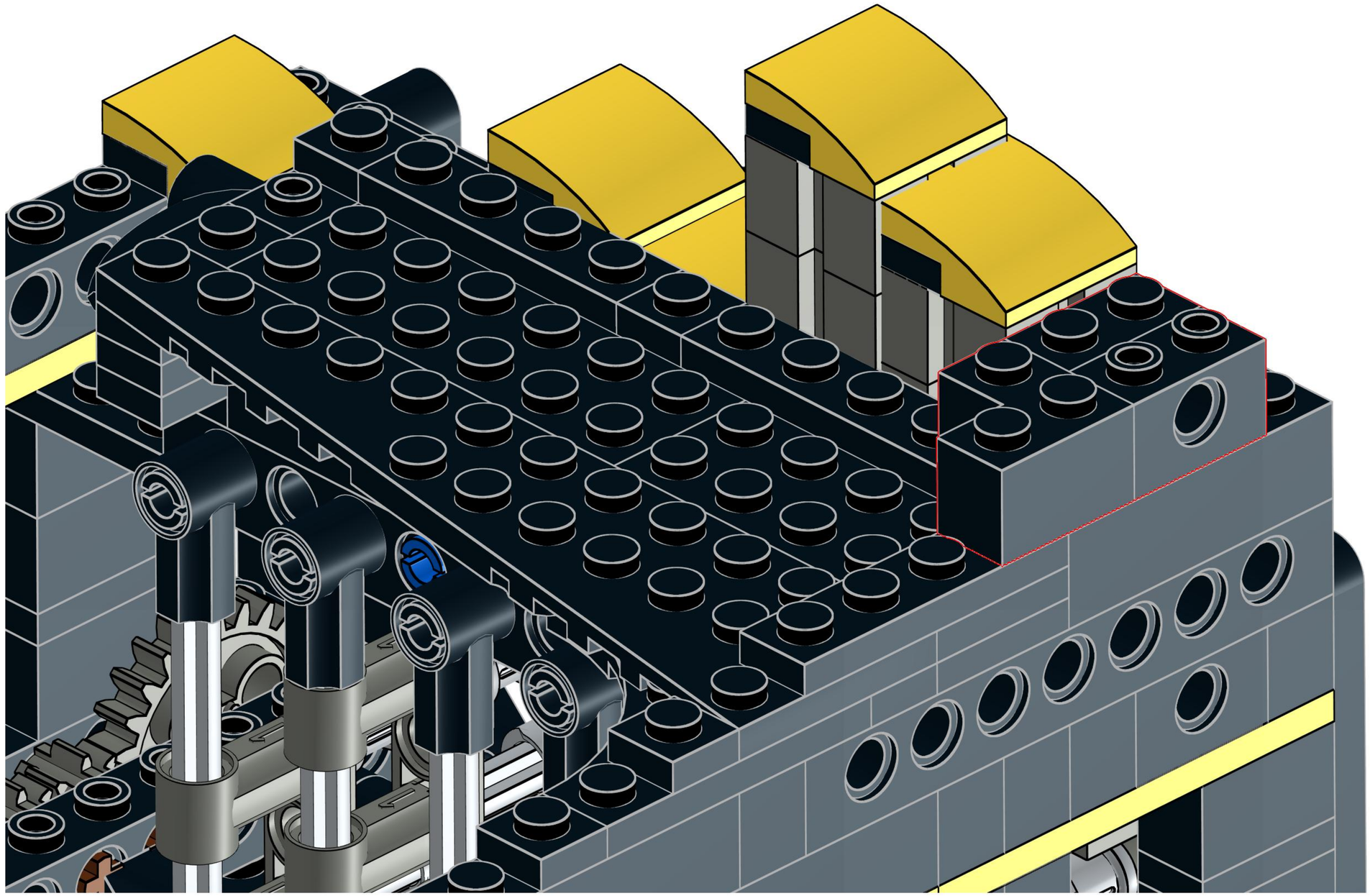

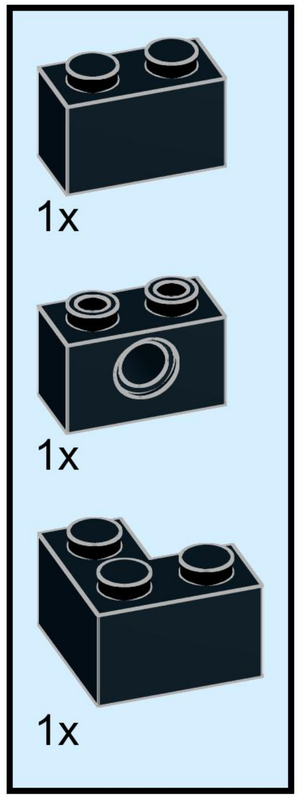

# 95

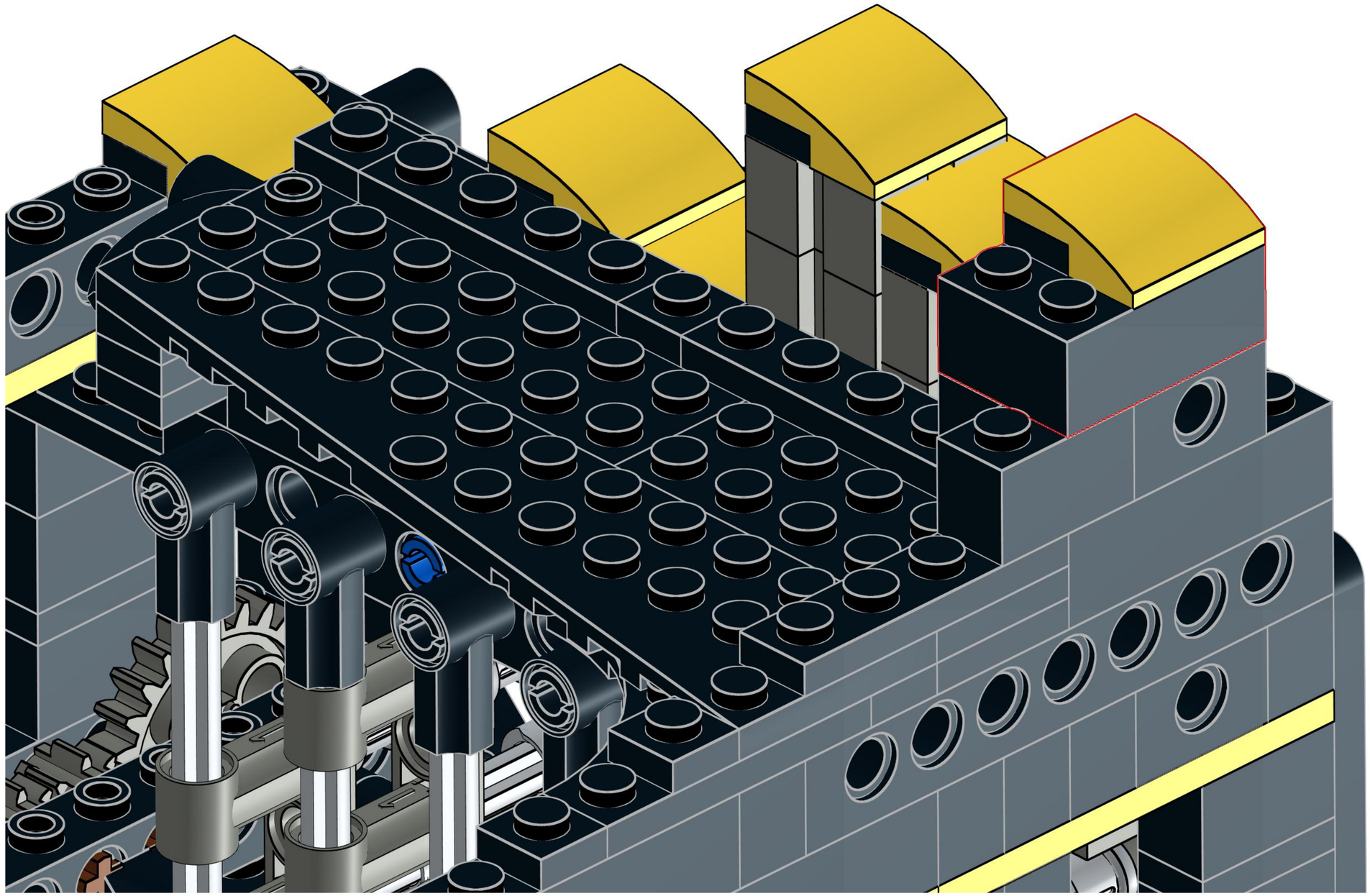

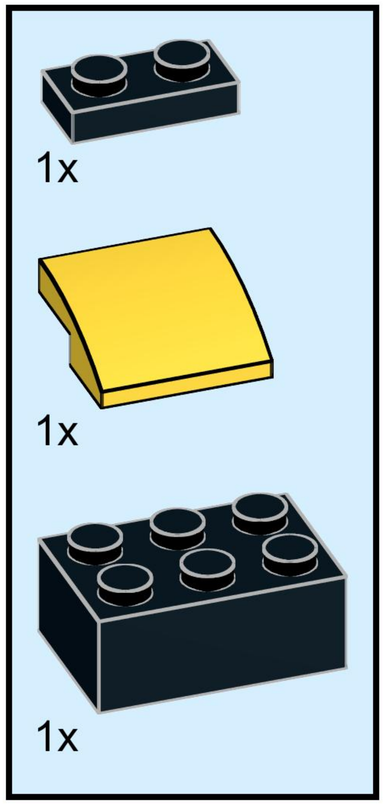

# 96

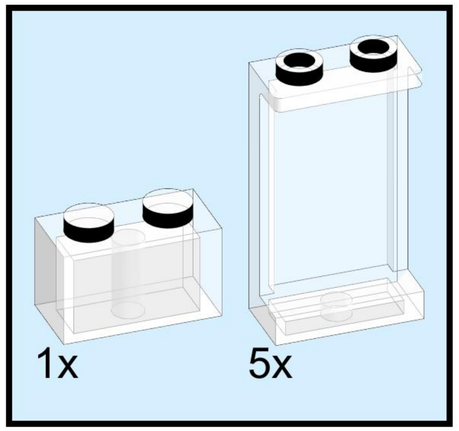


Transparent panels are 3 bricks high.

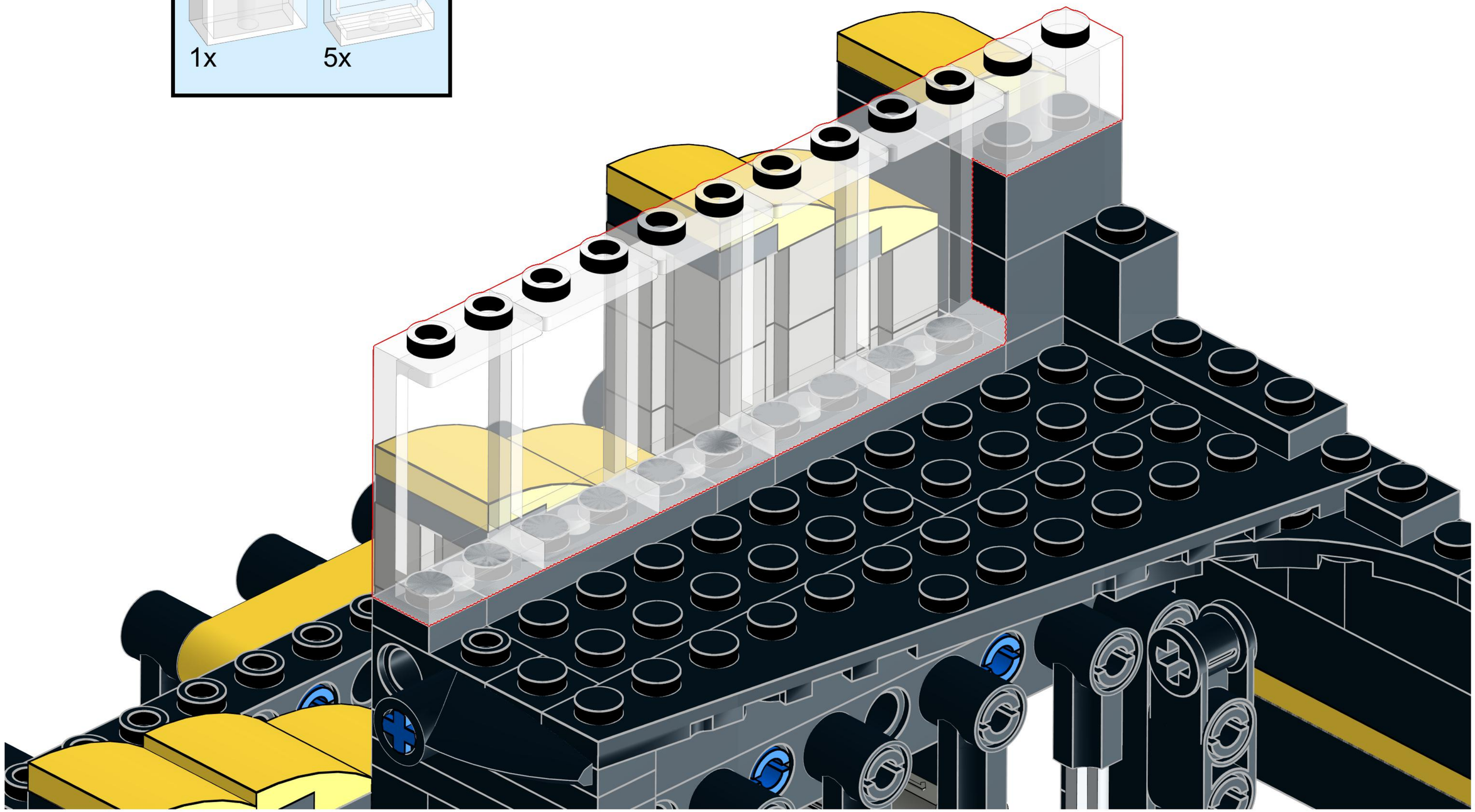

# 97

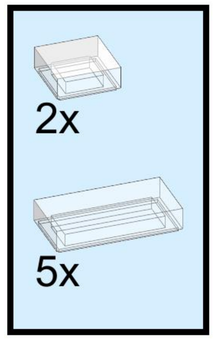


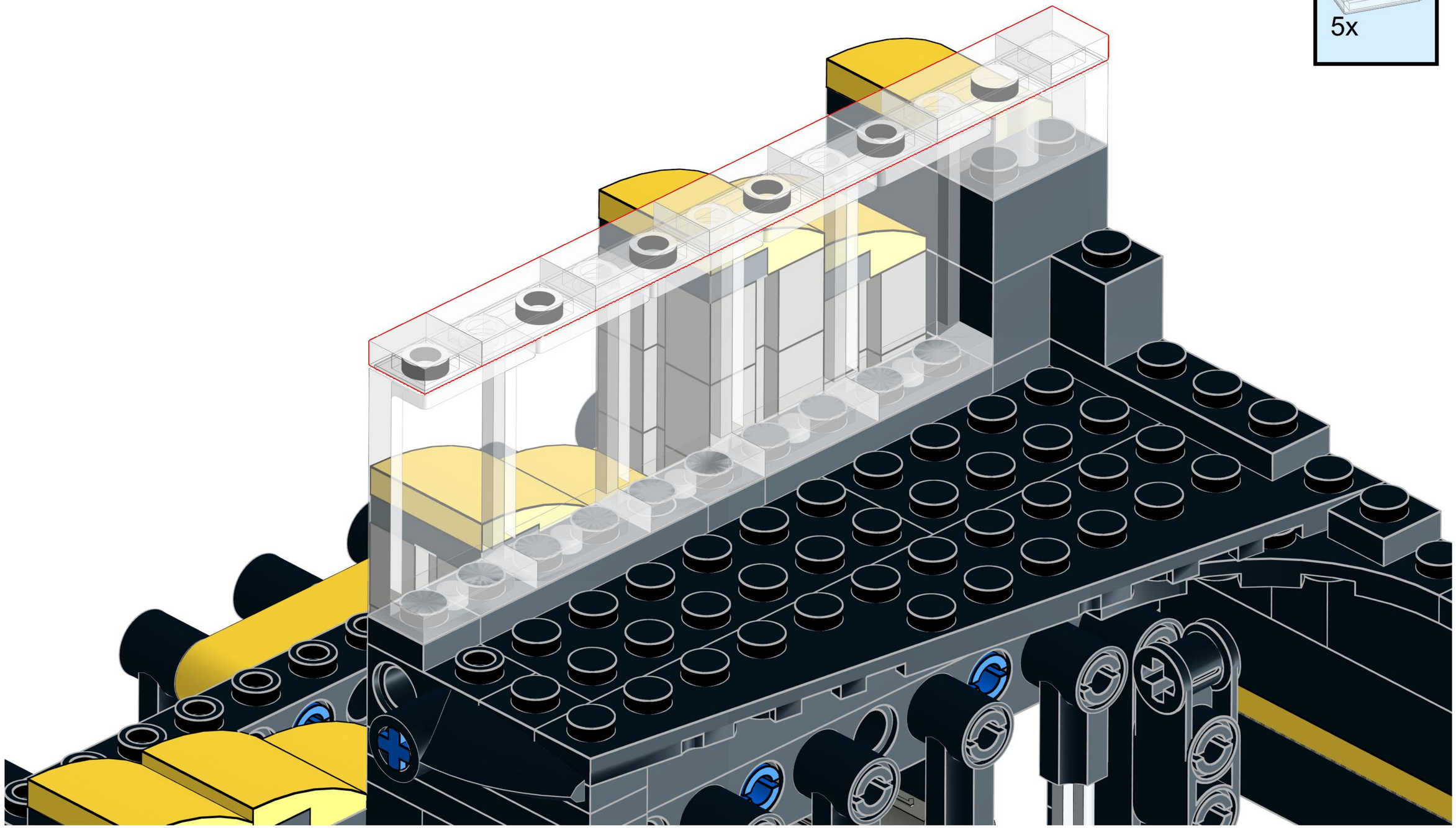

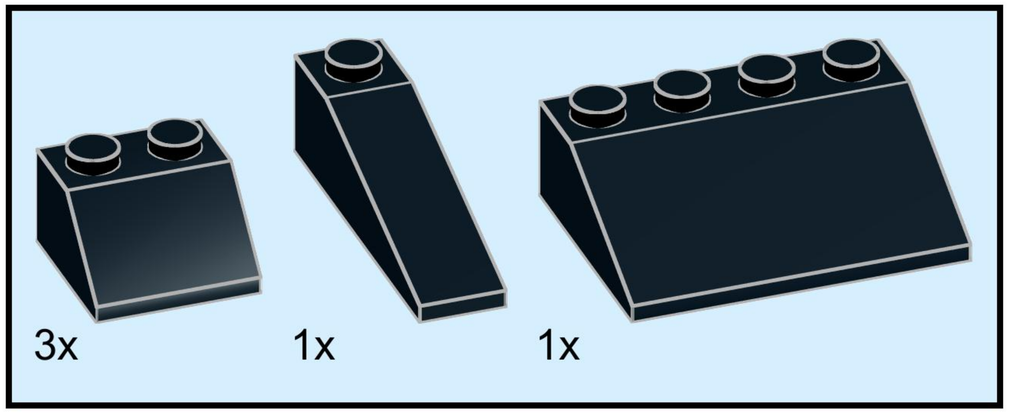
3x
1x
1x

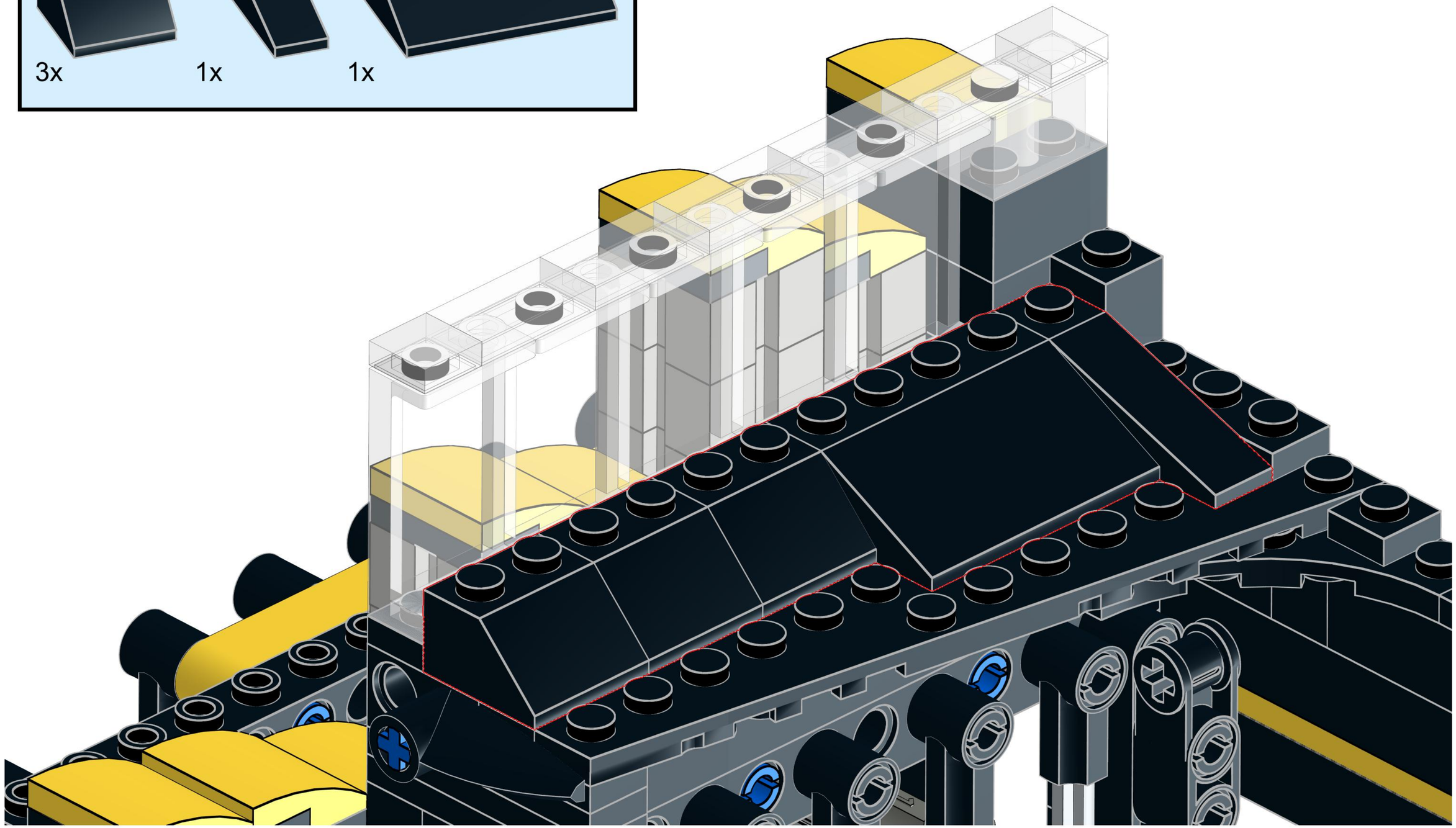

# 99

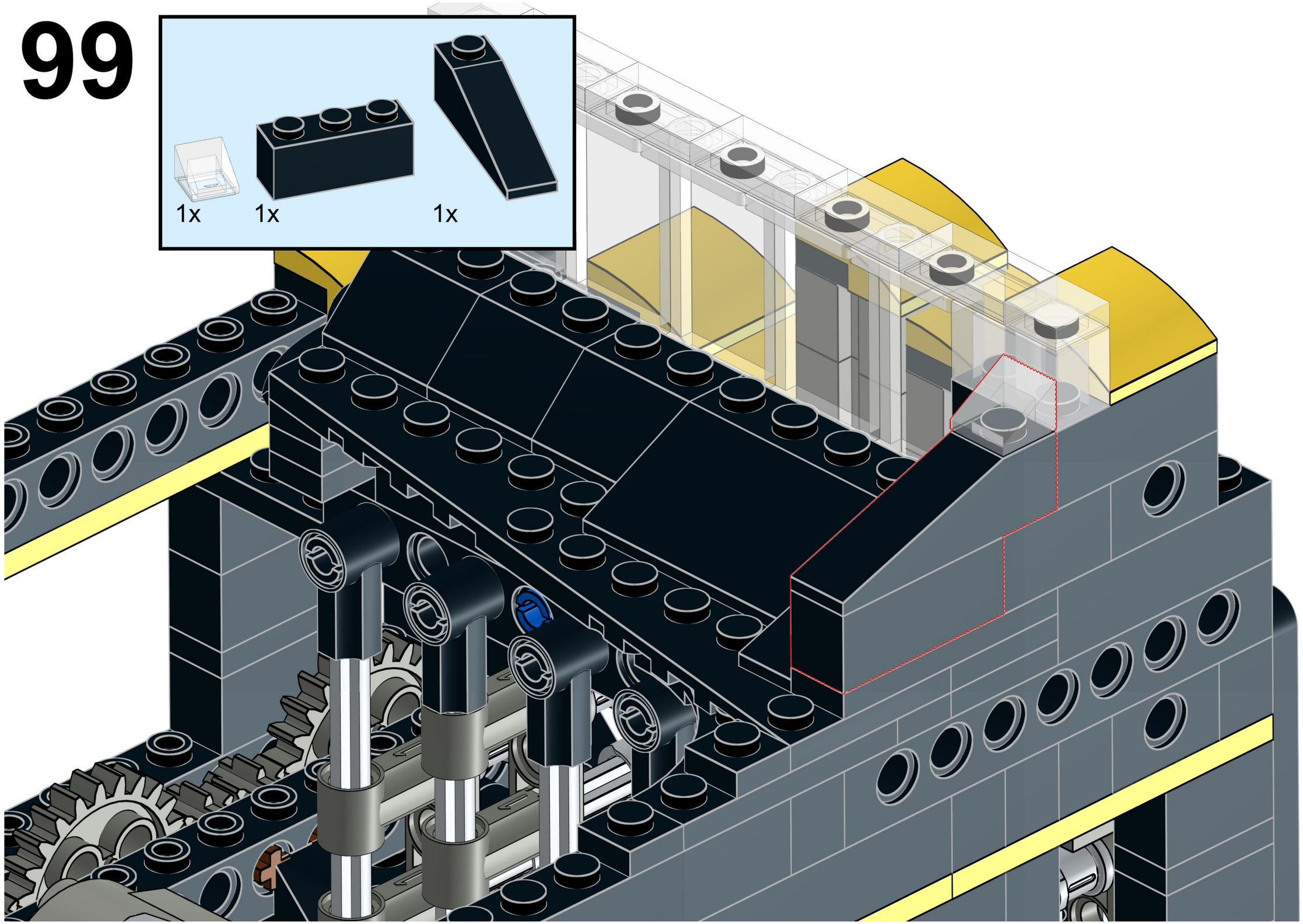

# 100

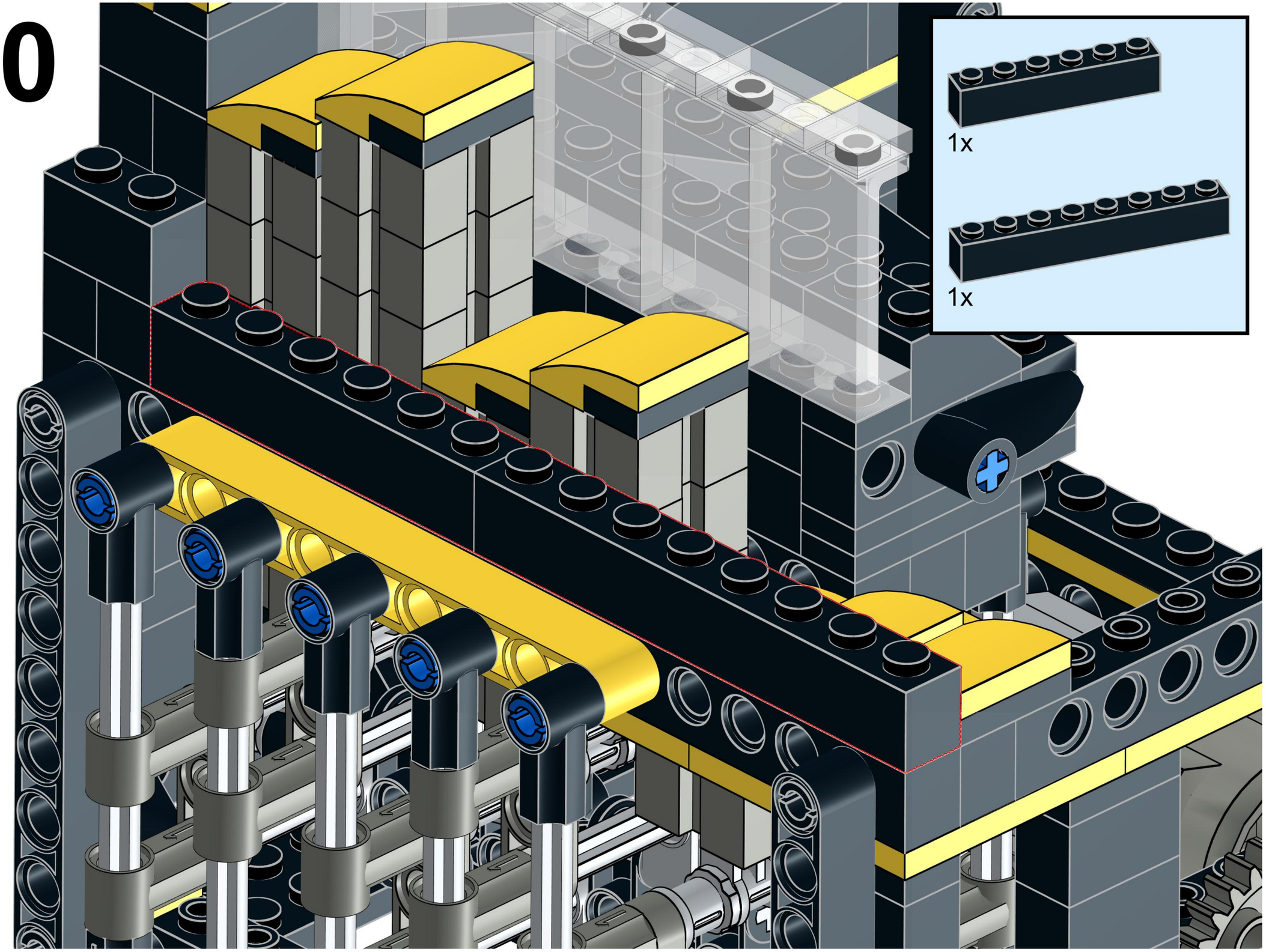

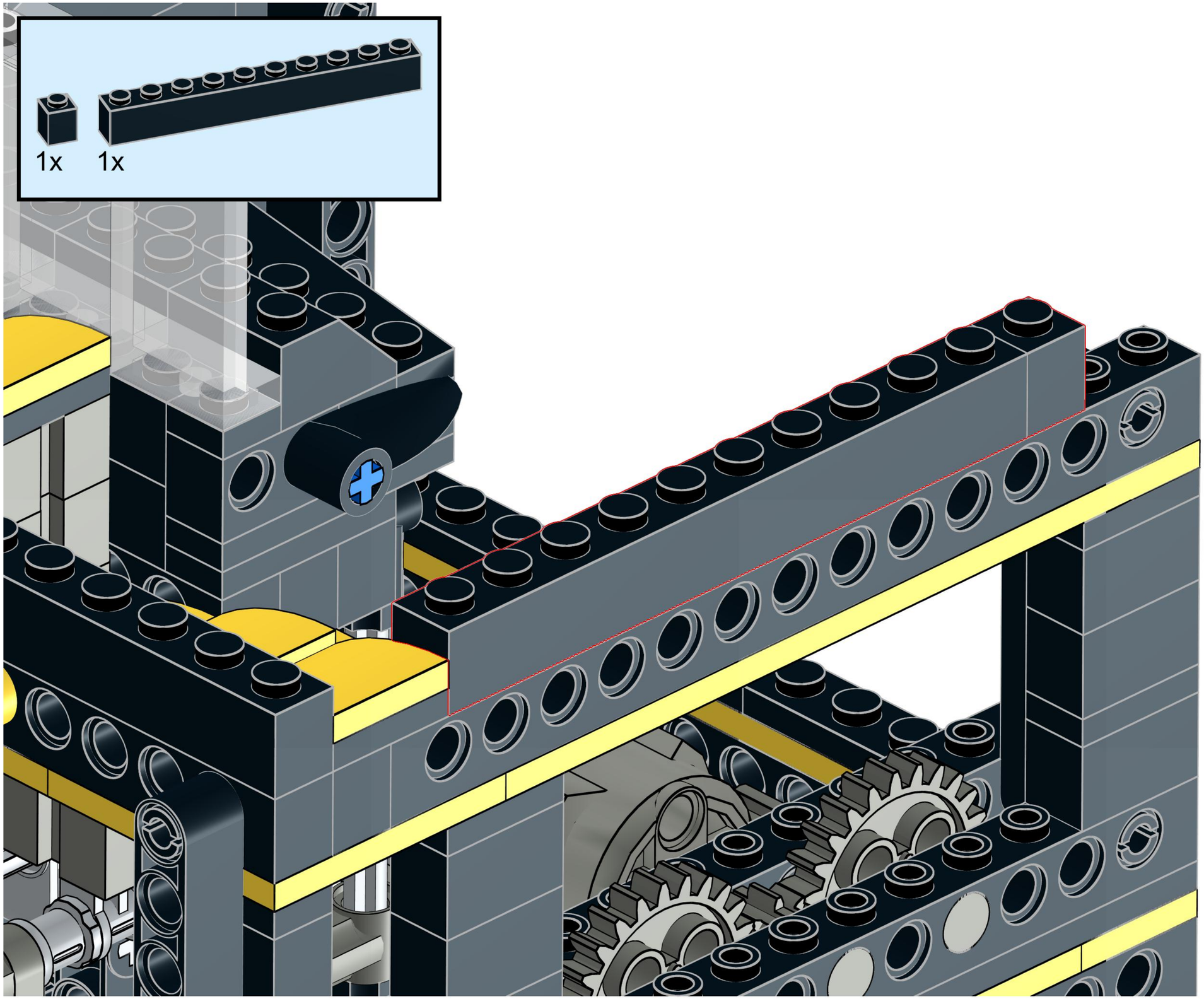
1x
1x

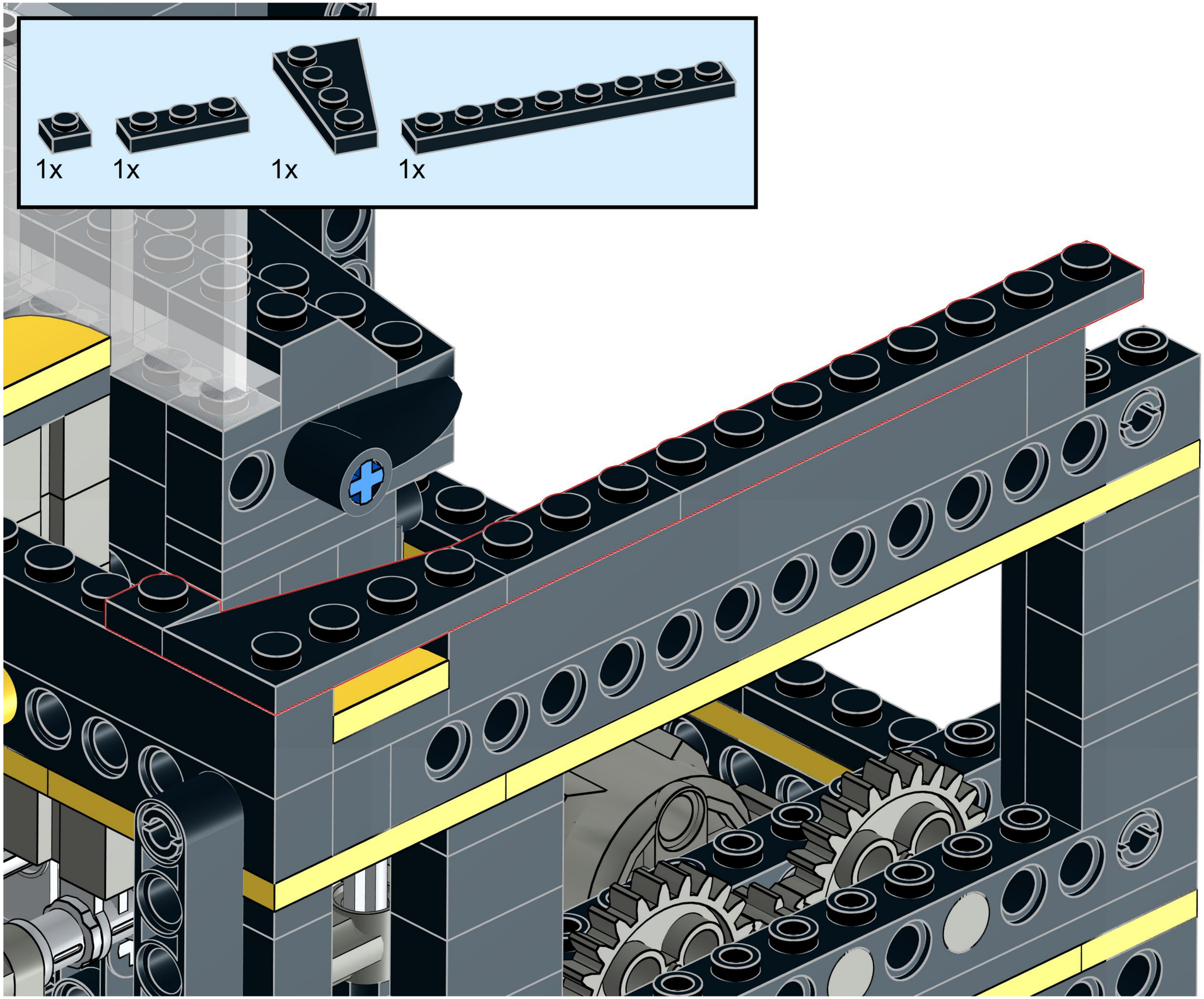
1x
1x
1x
1x

# 103

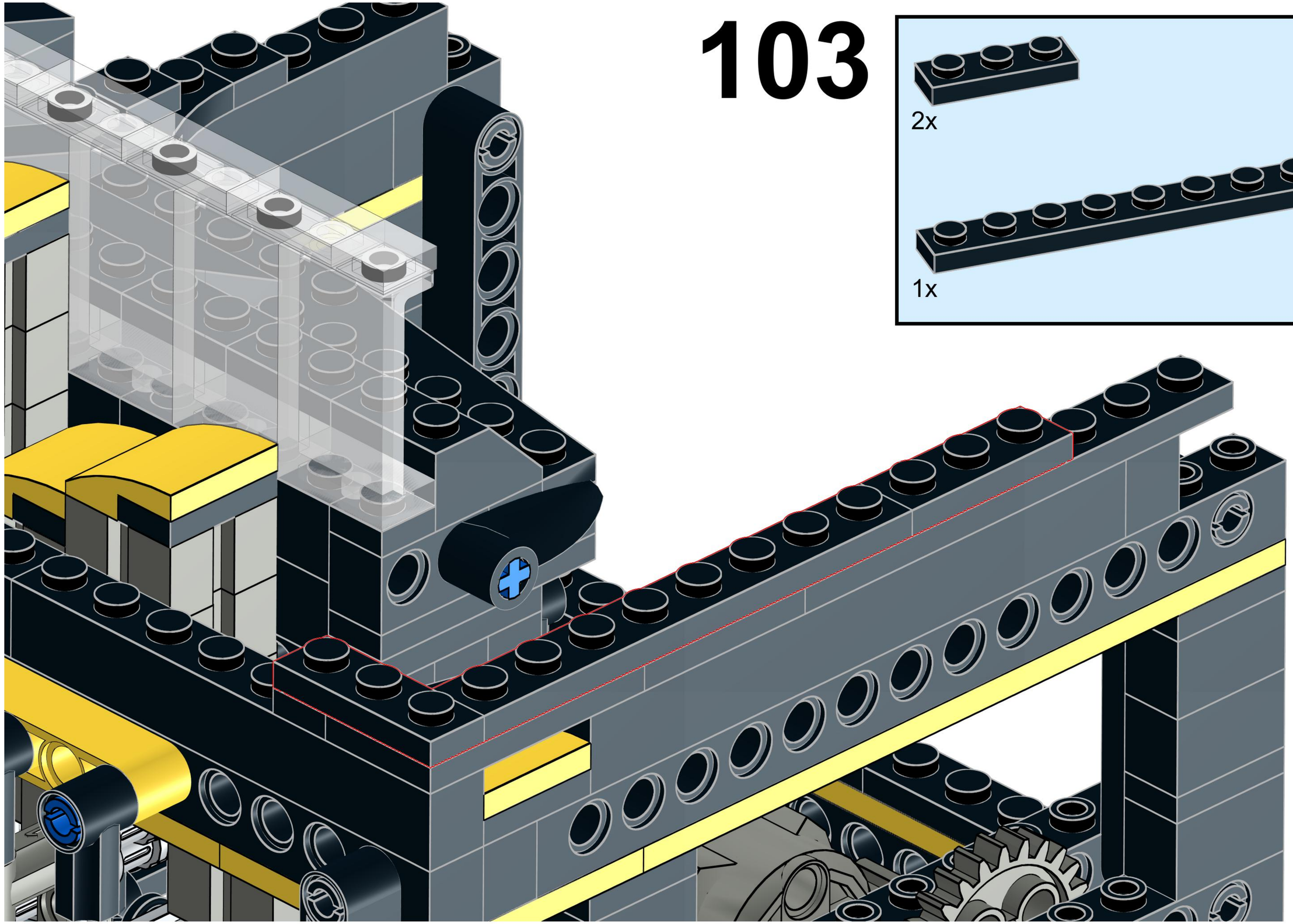

# 104

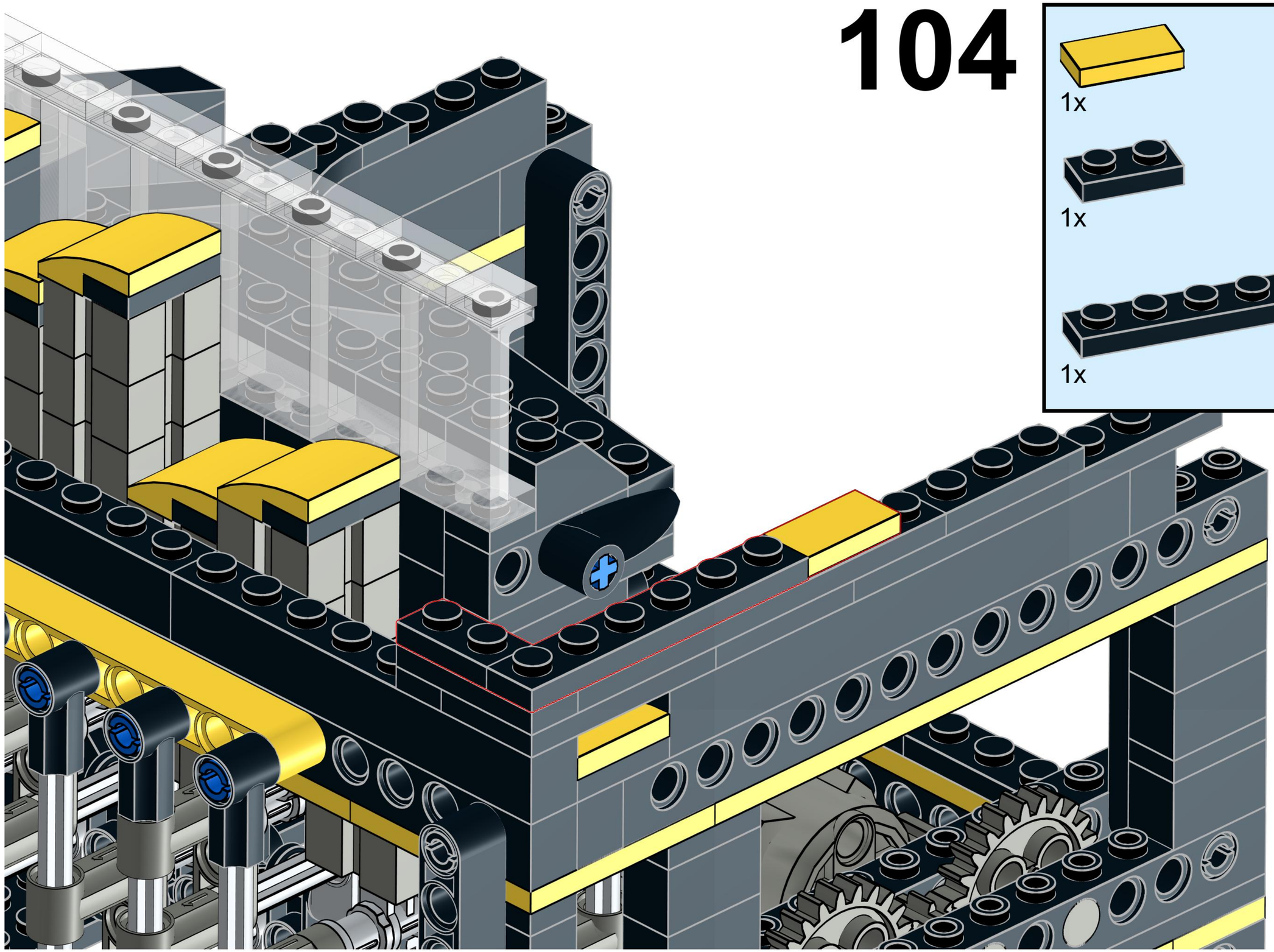

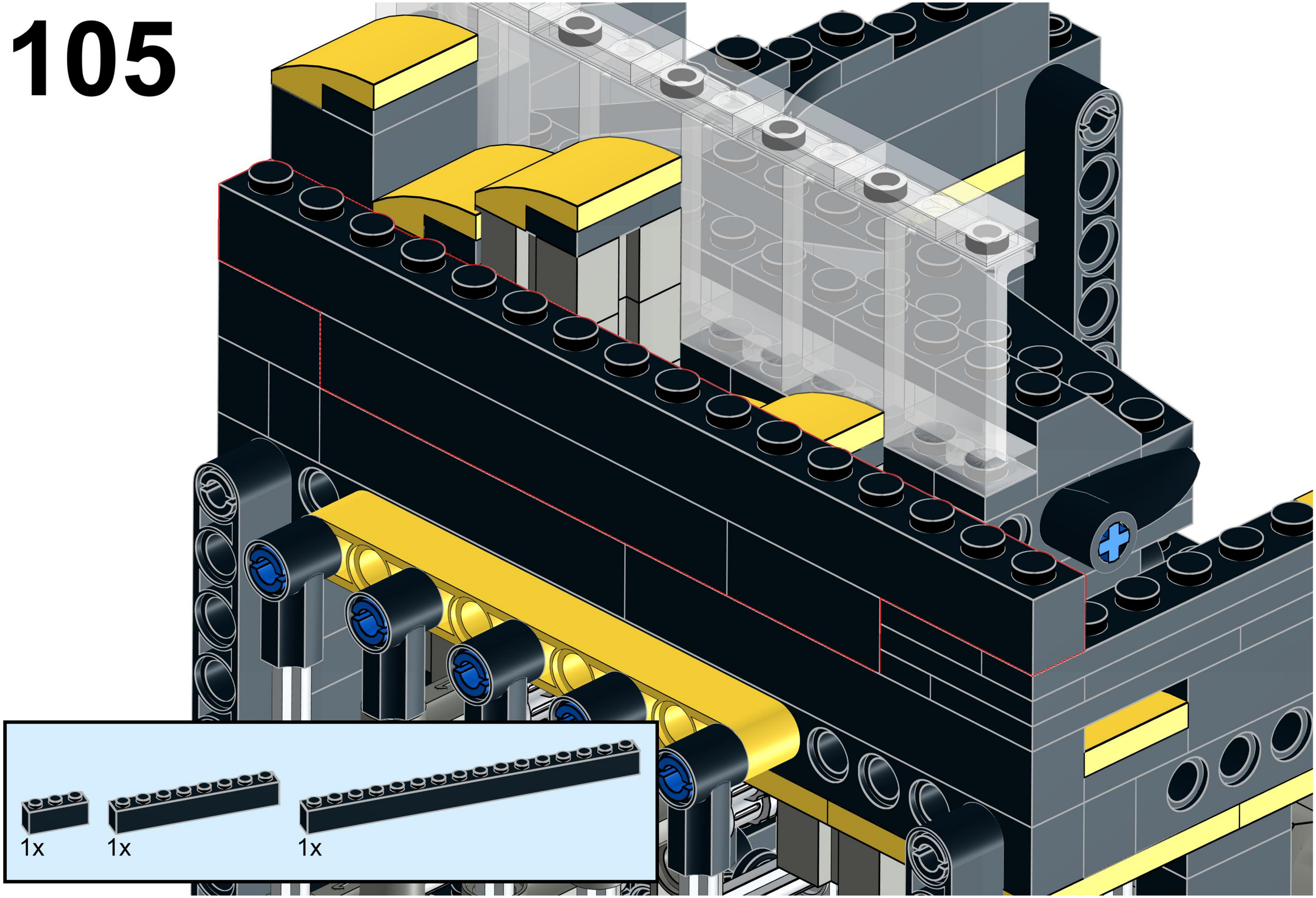
1x
1x
1x

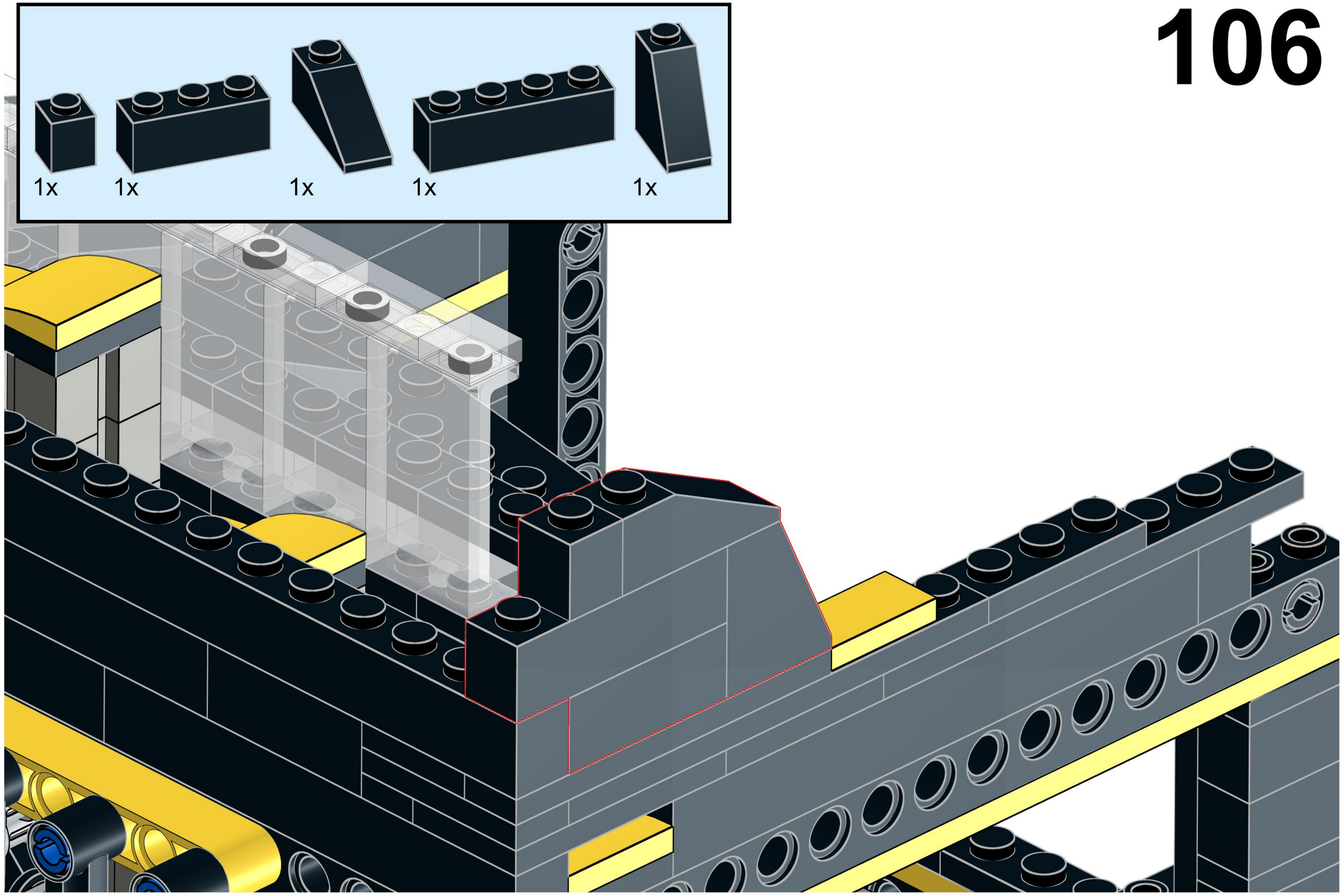
1x
1x
1x
1x
1x

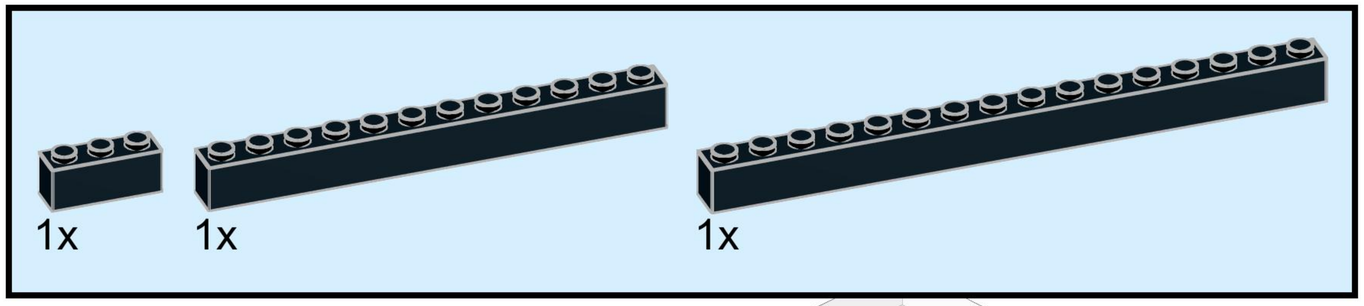
1x
1x
1x

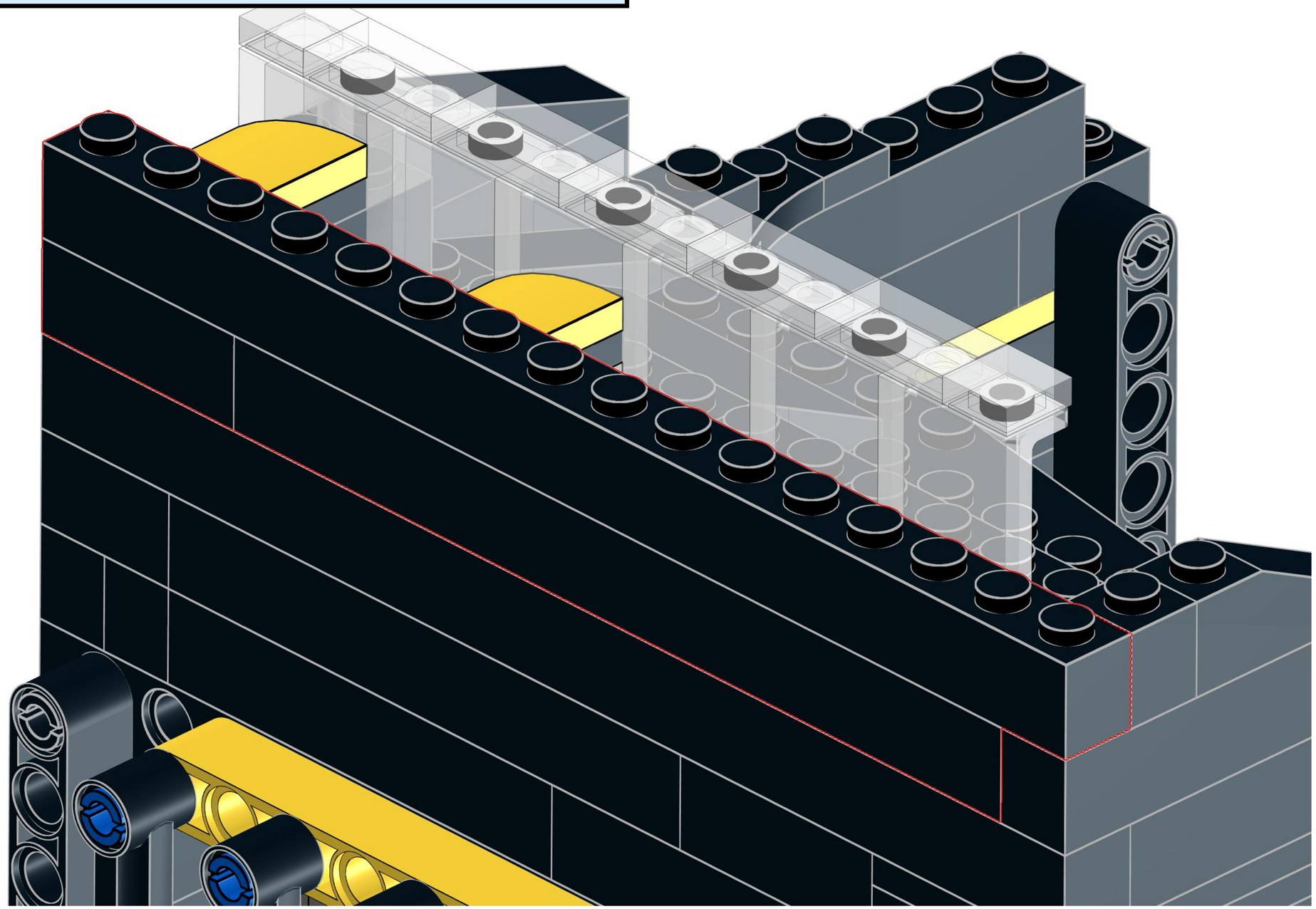

# 108

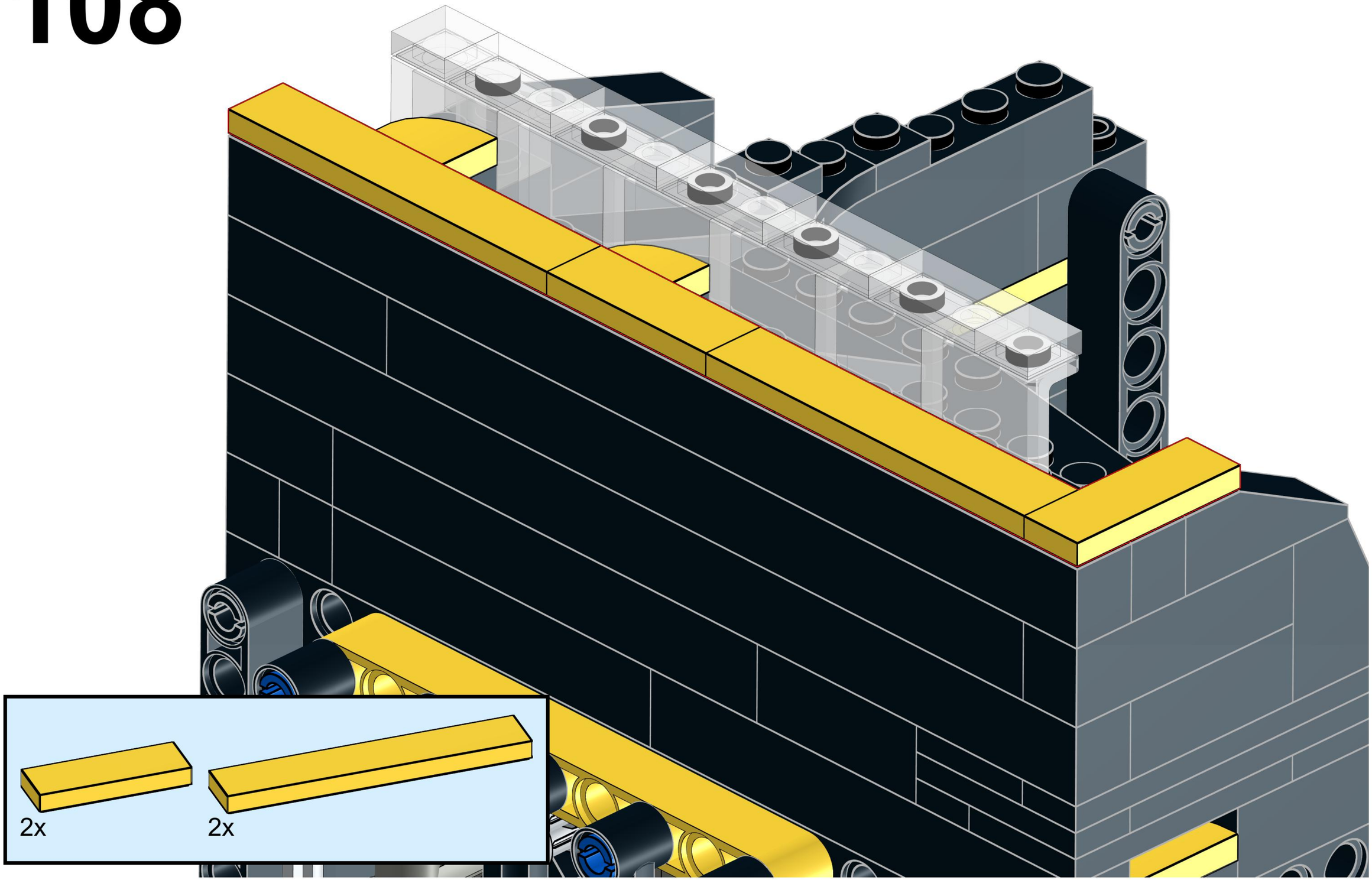

# 109

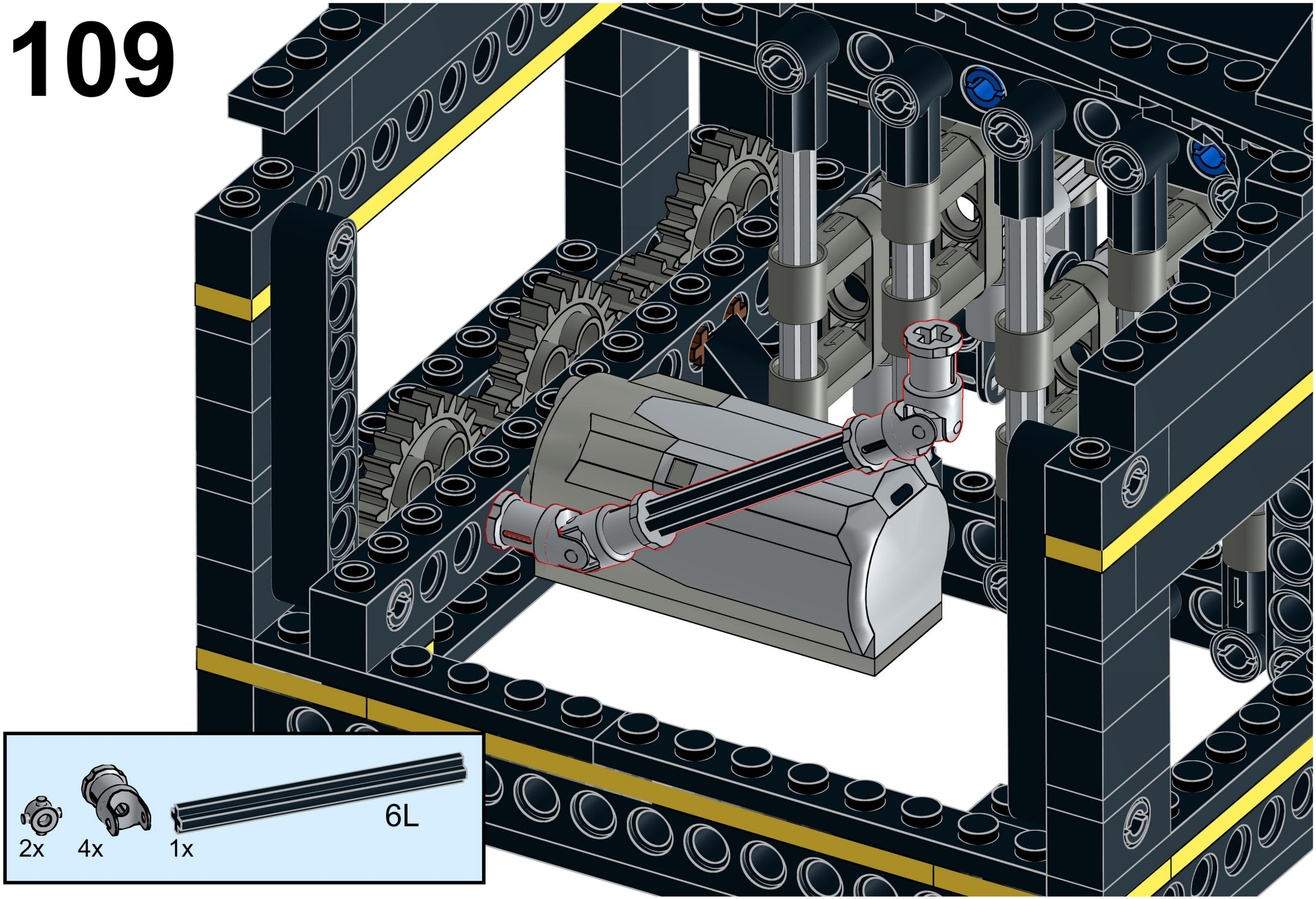

# 110

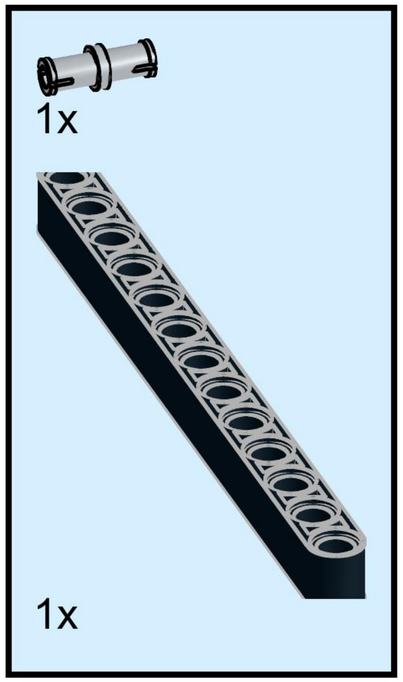

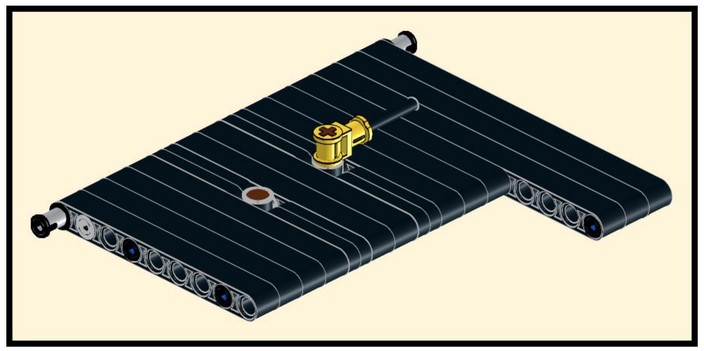

# 111

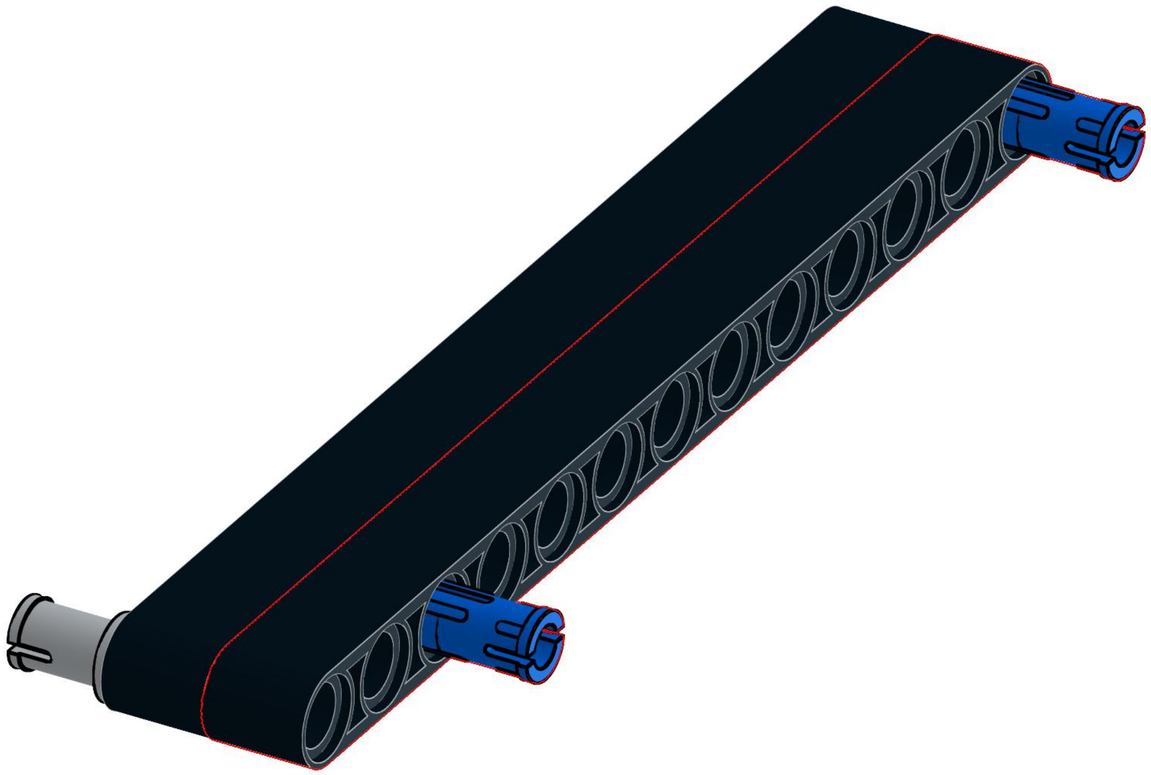

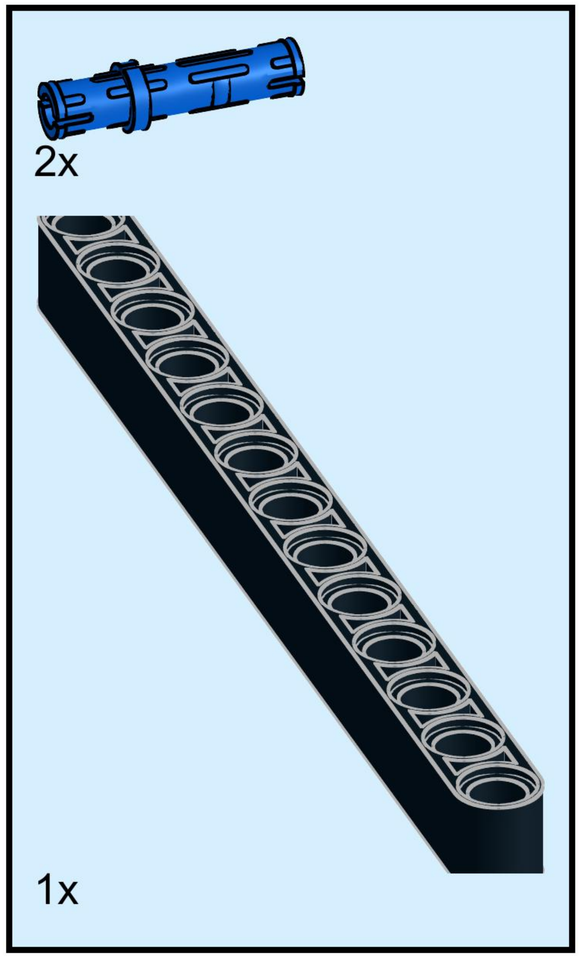

# 112

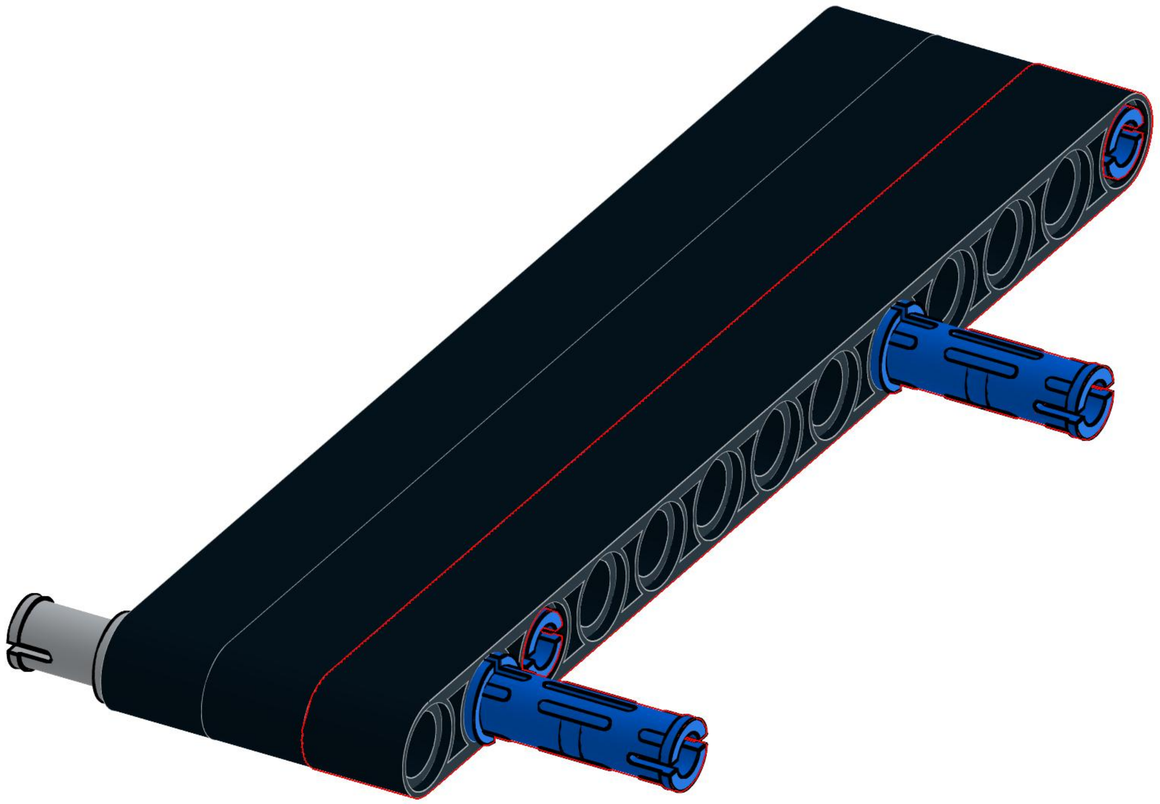

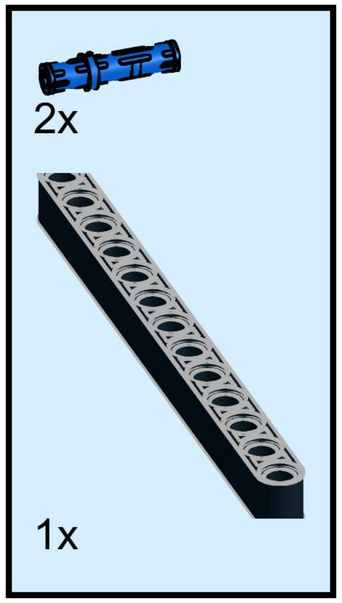

# 113

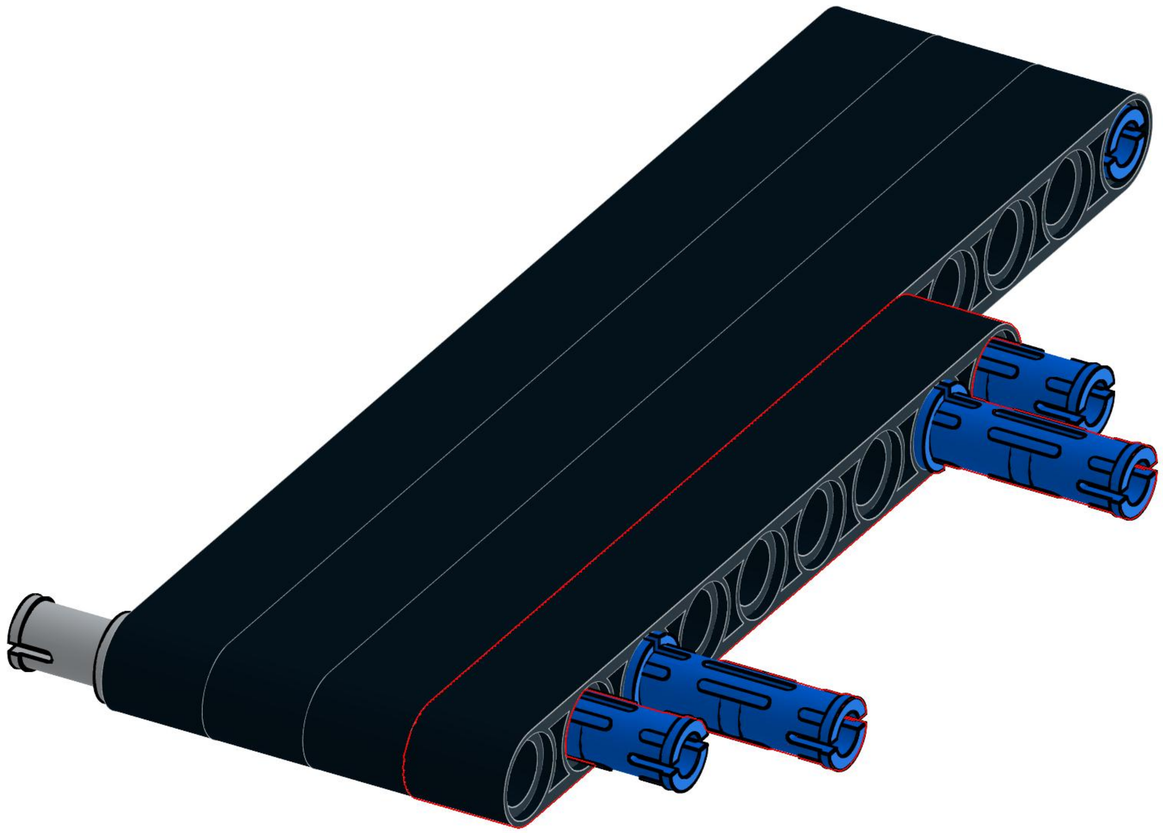

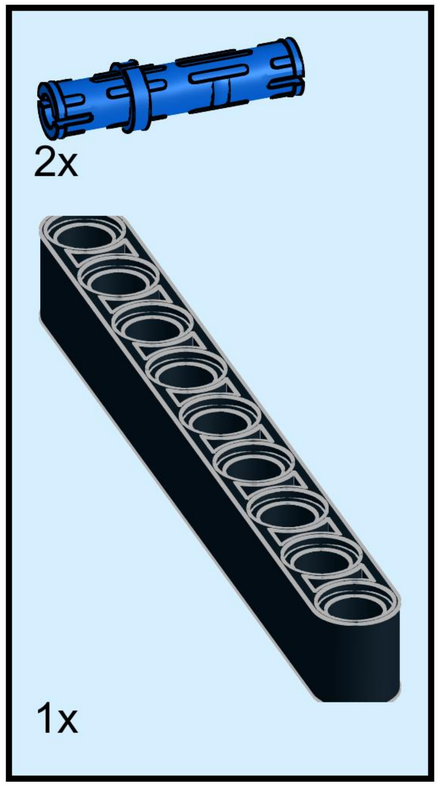

# 114

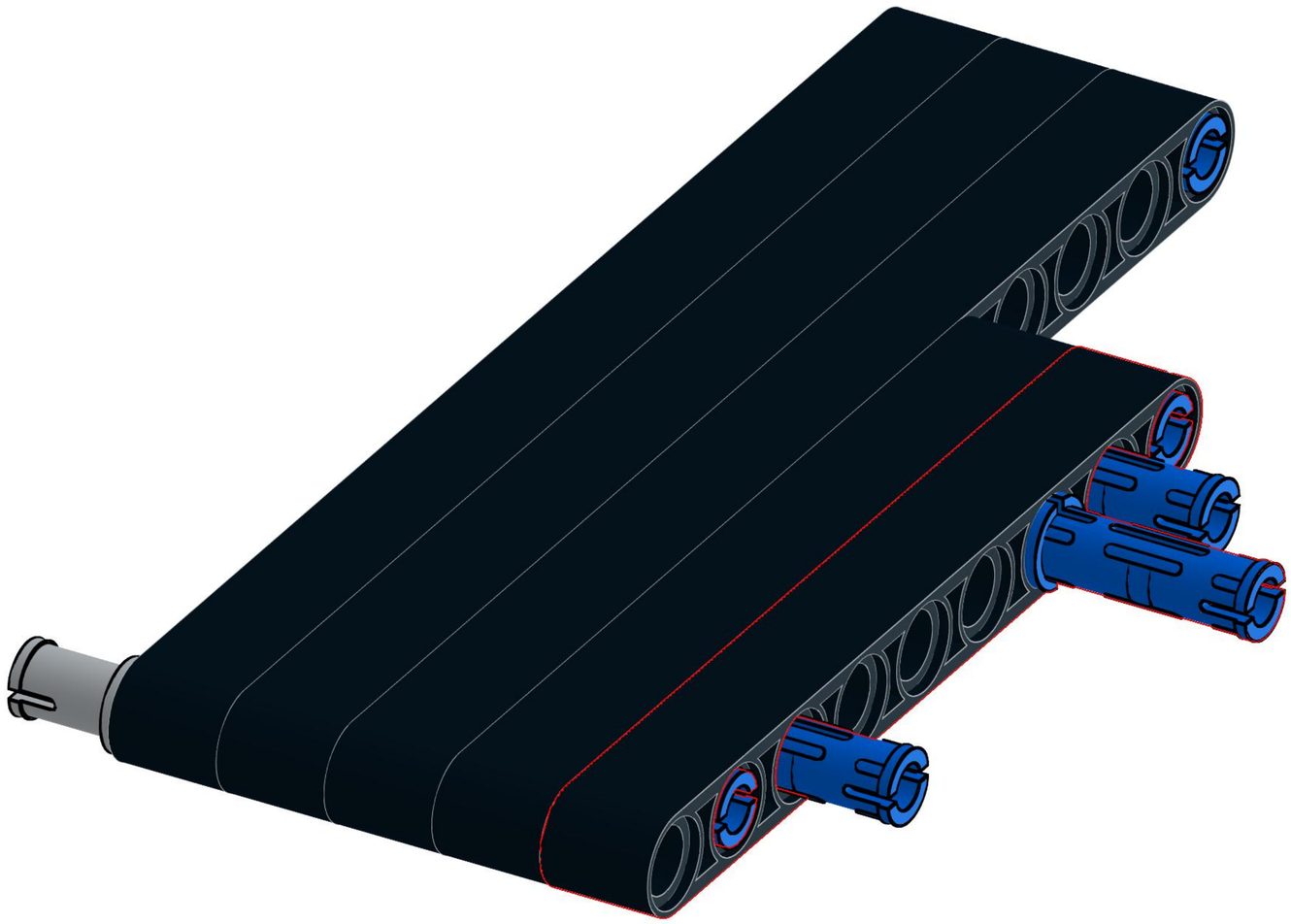

# 115

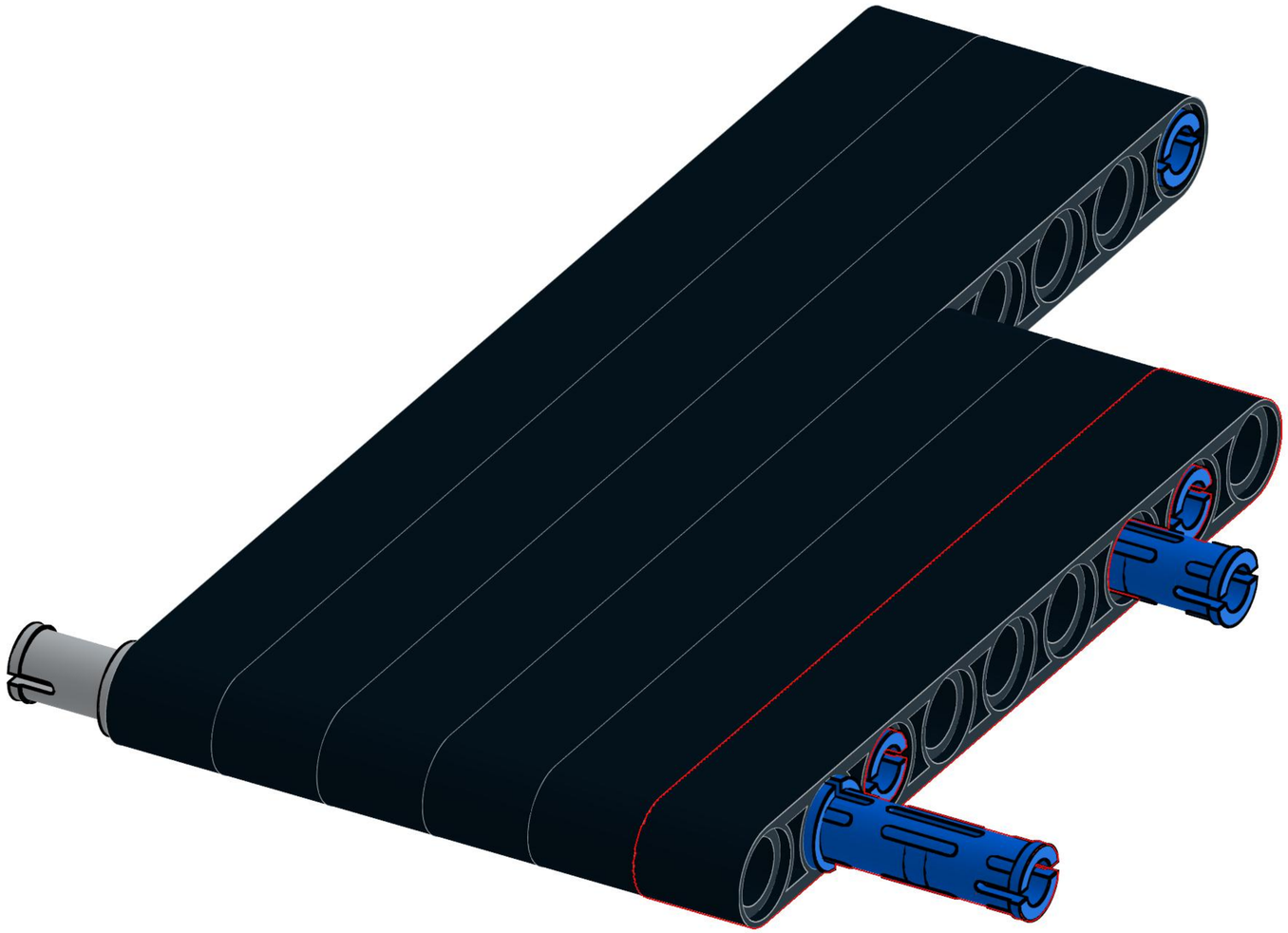

# 116

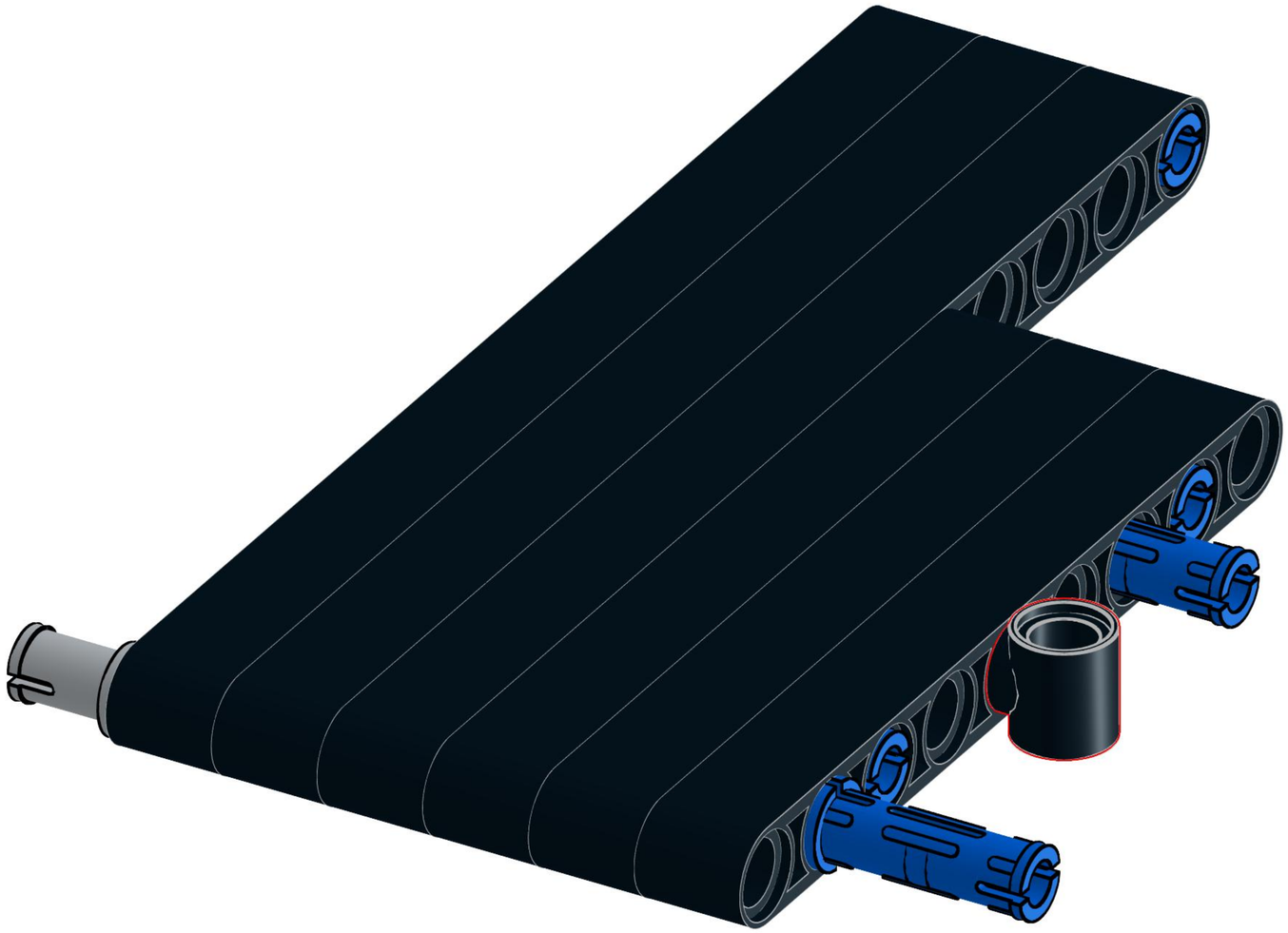

# 117

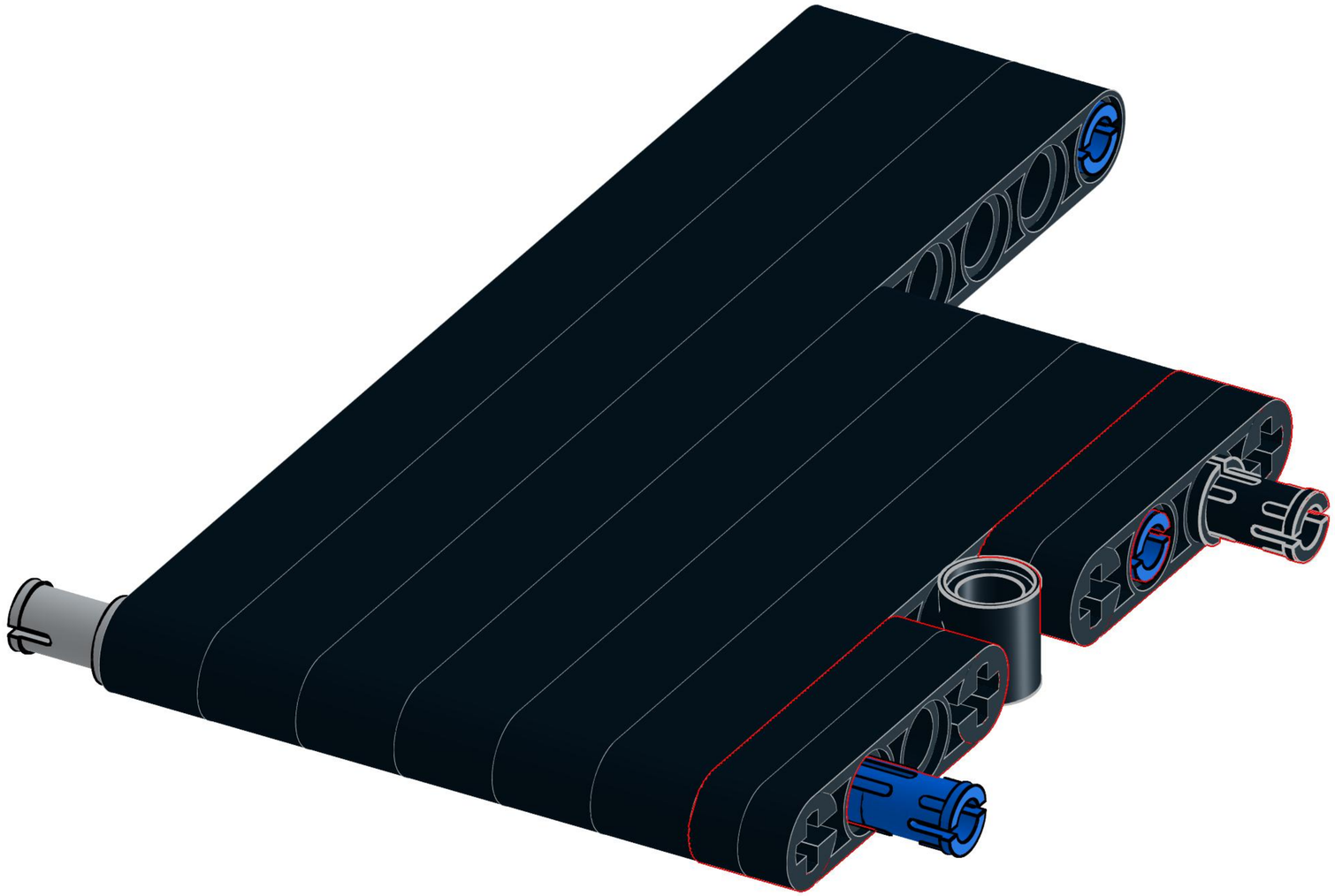

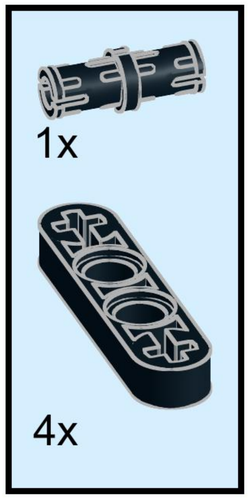

# 118

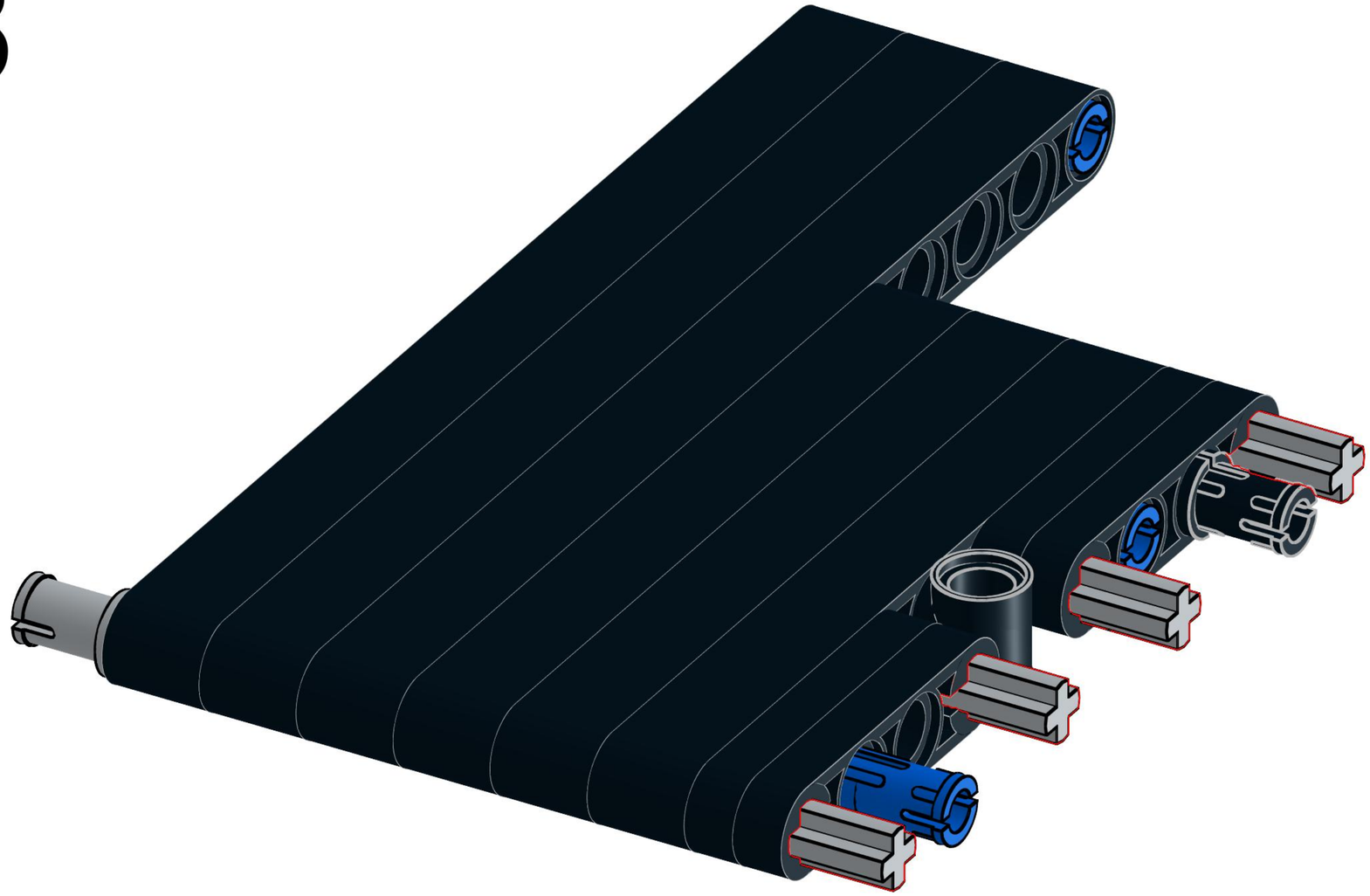

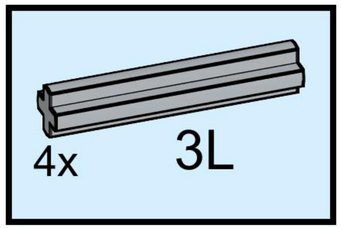

# 119

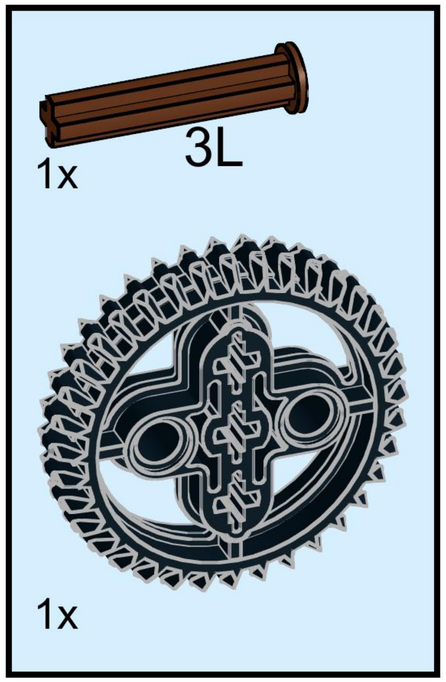

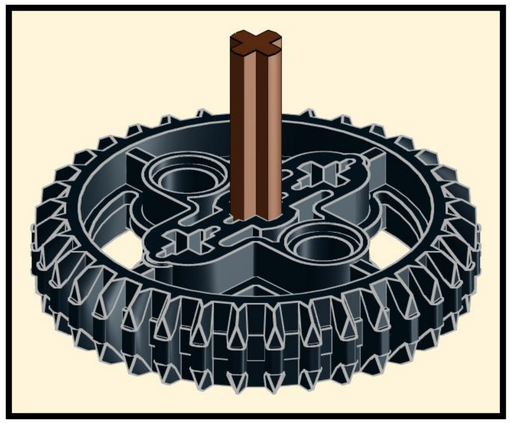

# 120

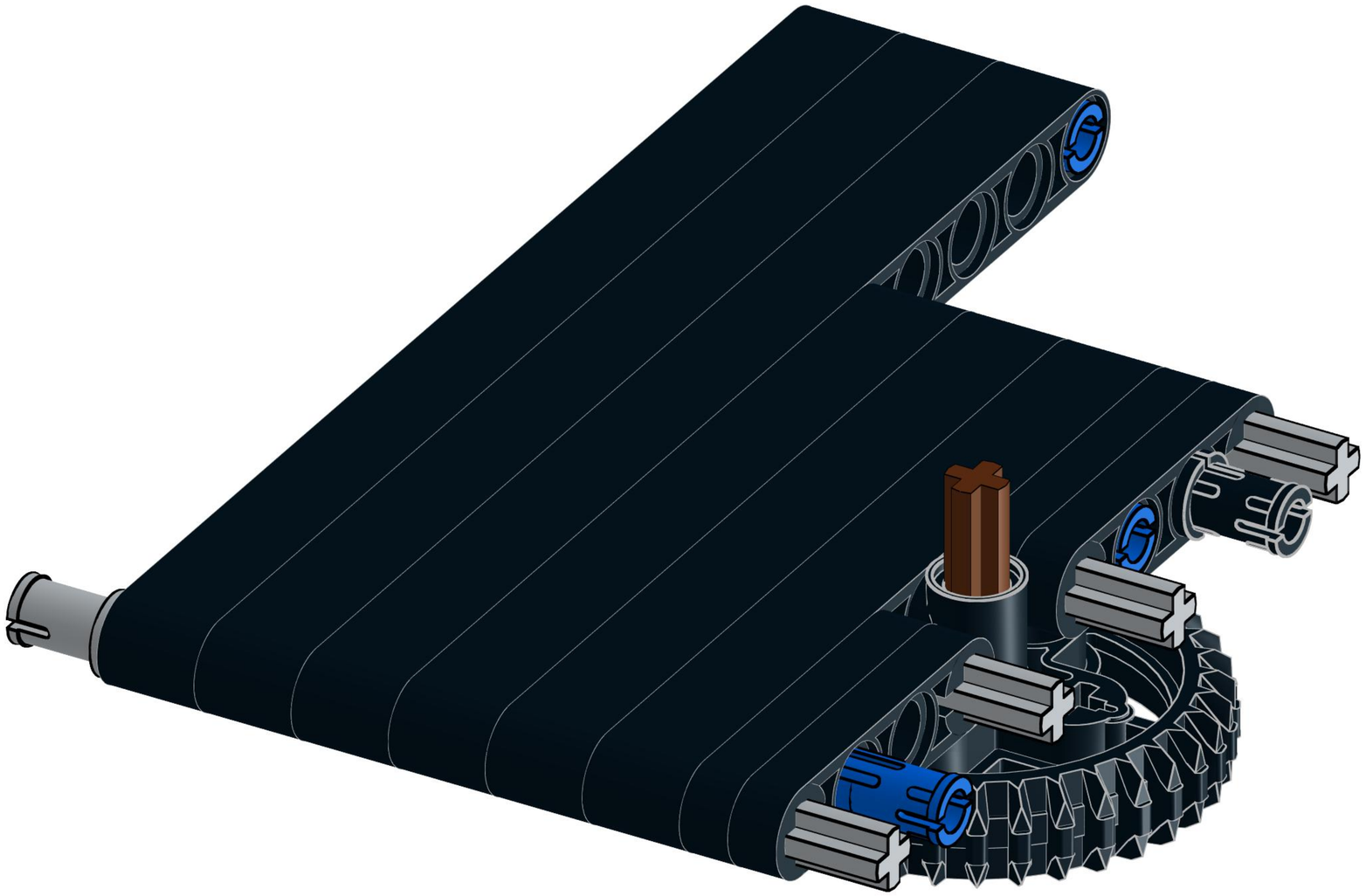

# 121

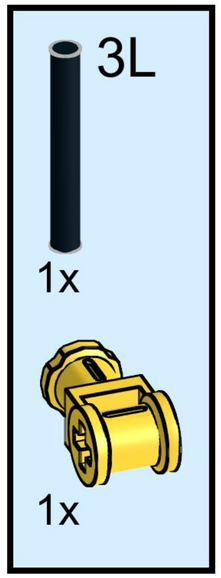


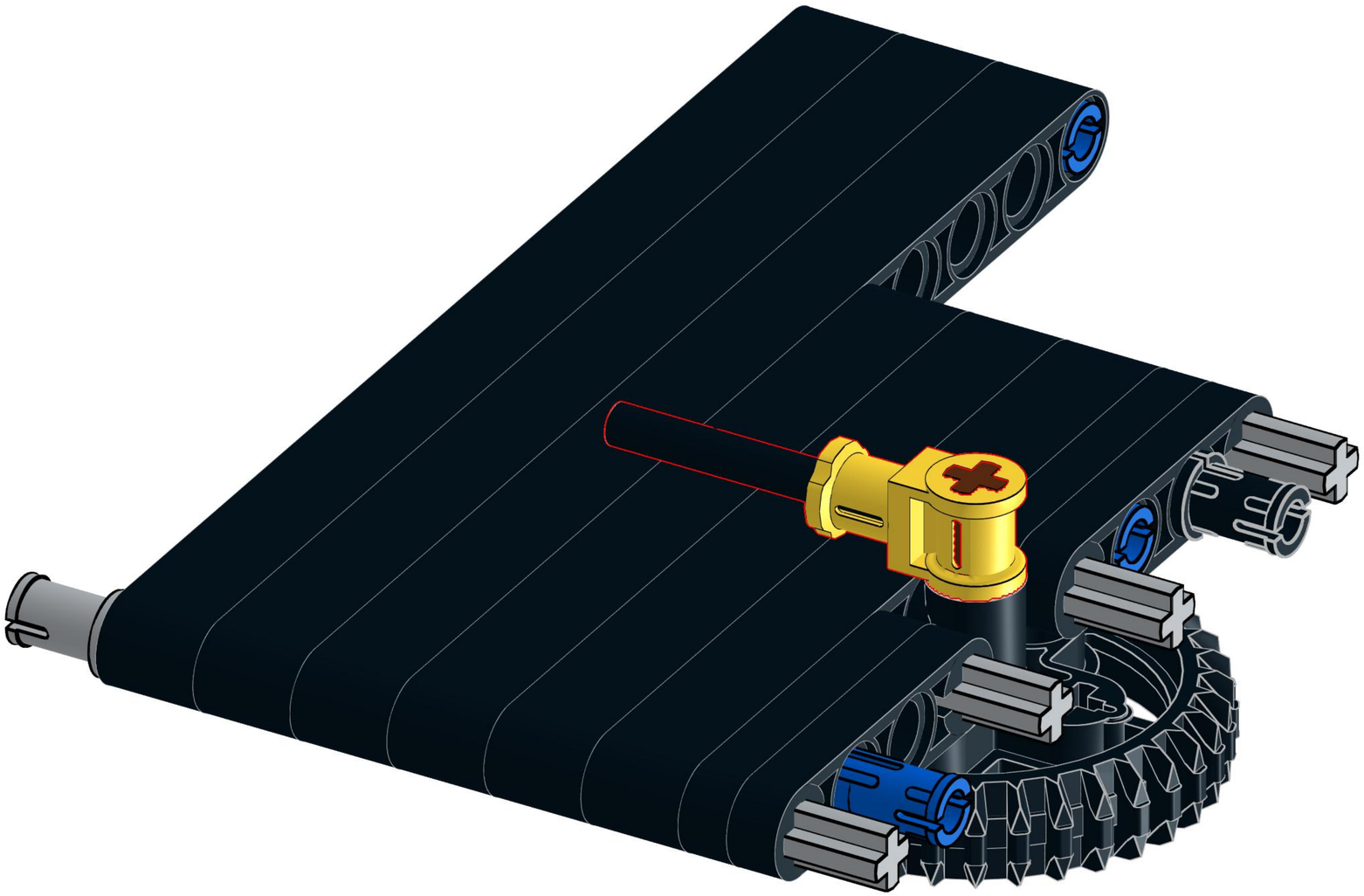

# 122

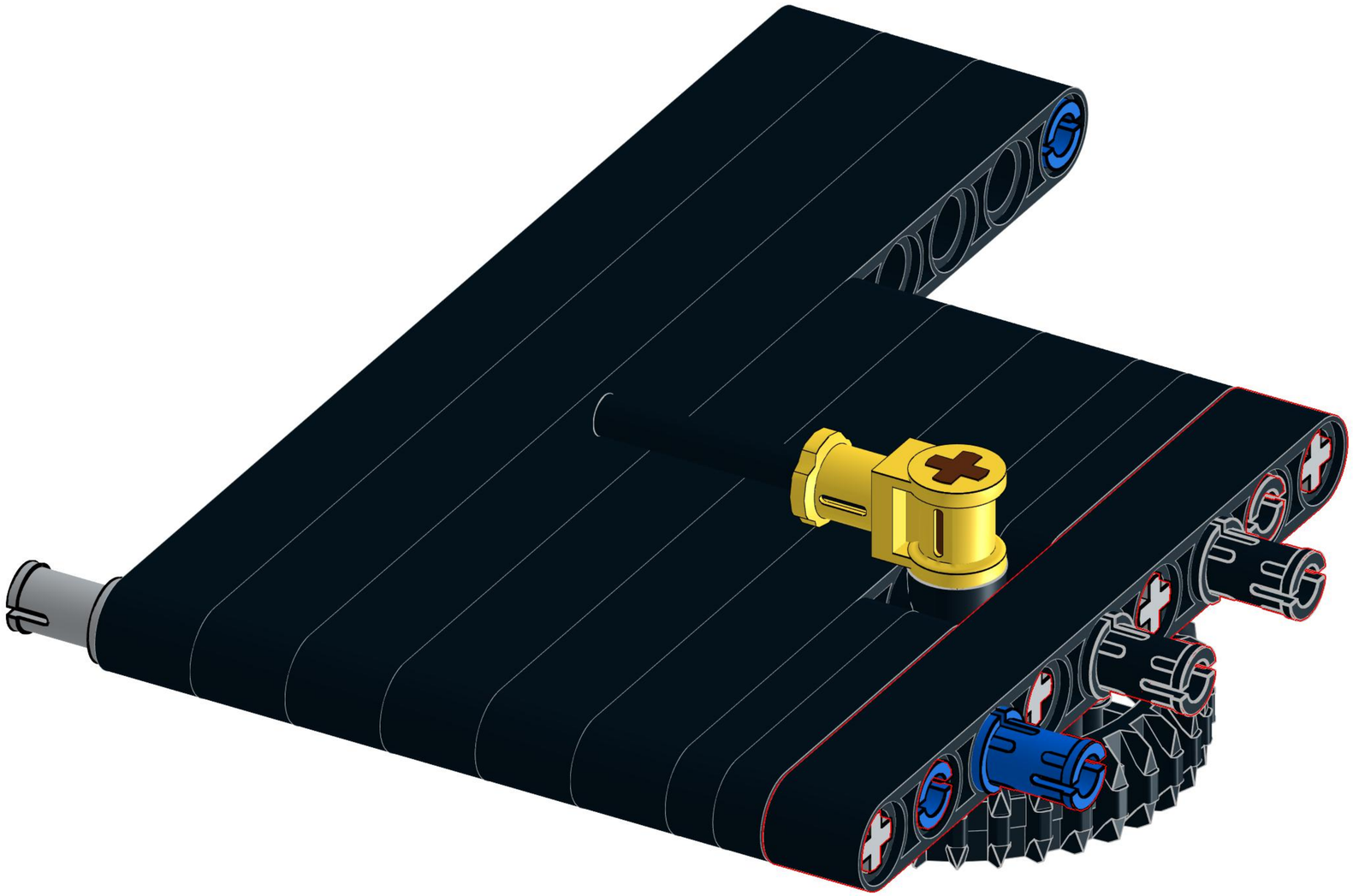

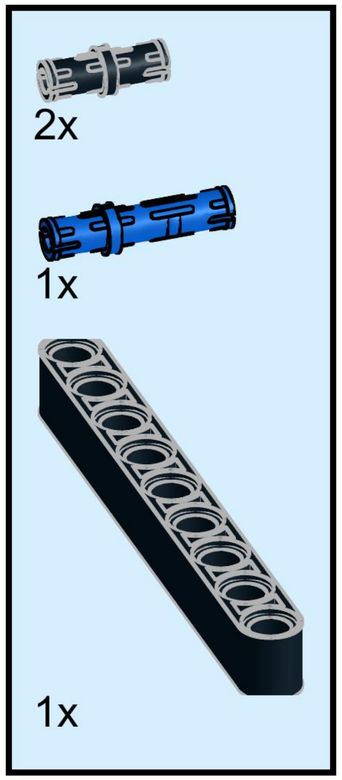

# 123

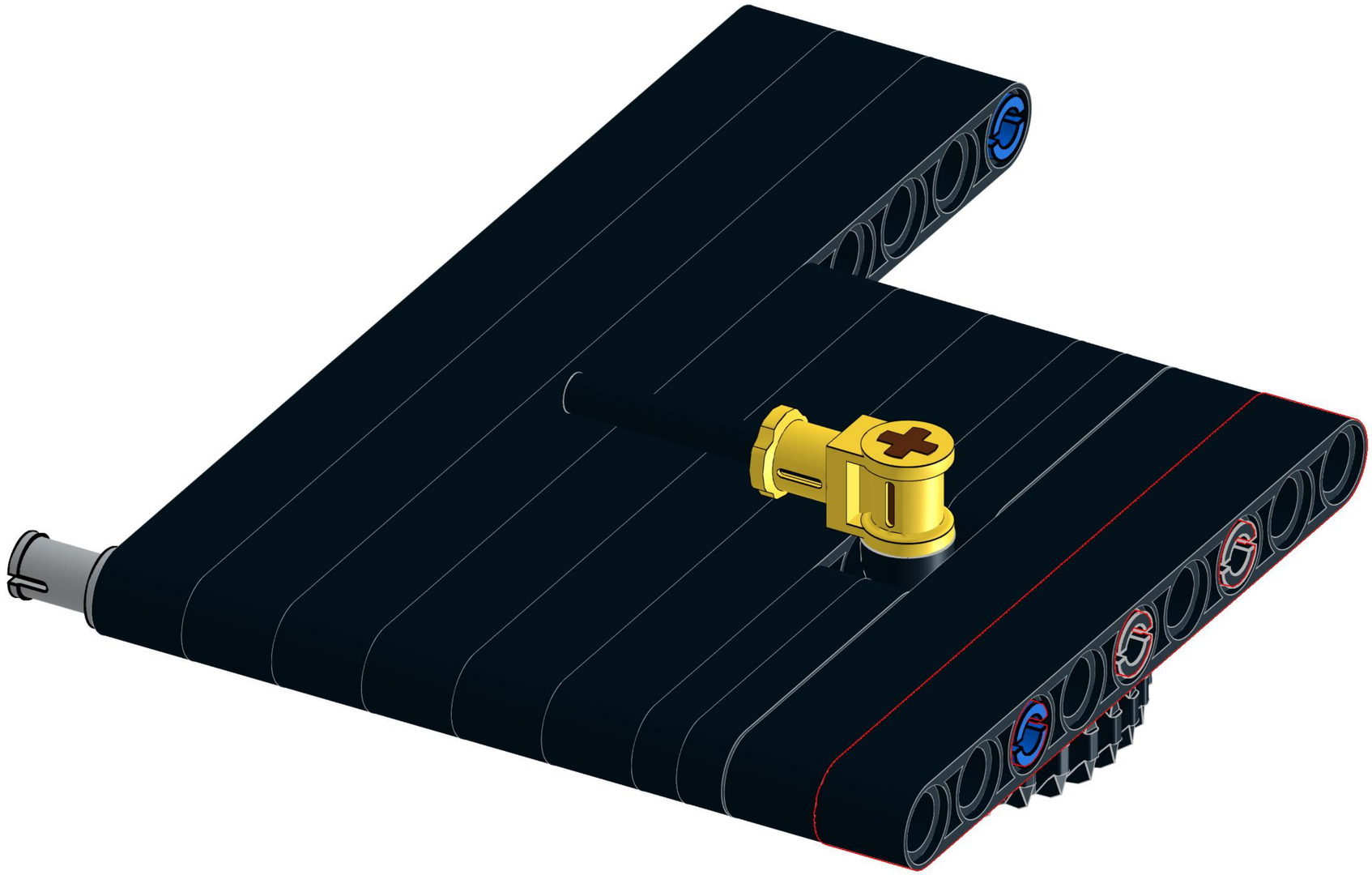

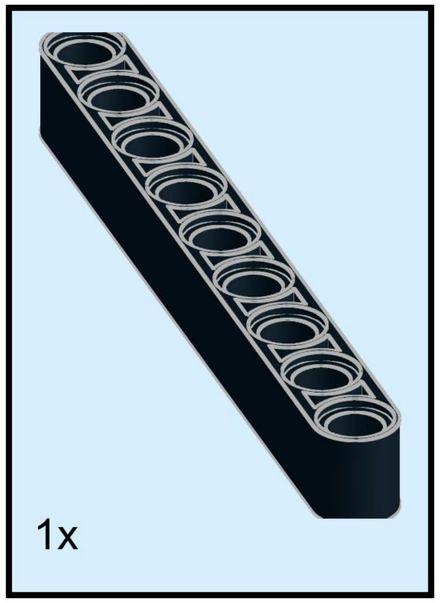

# 124

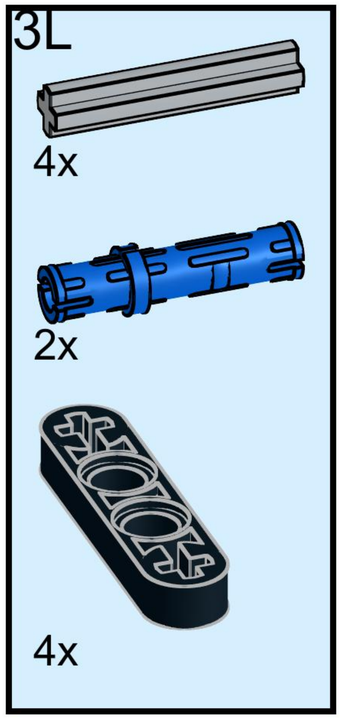


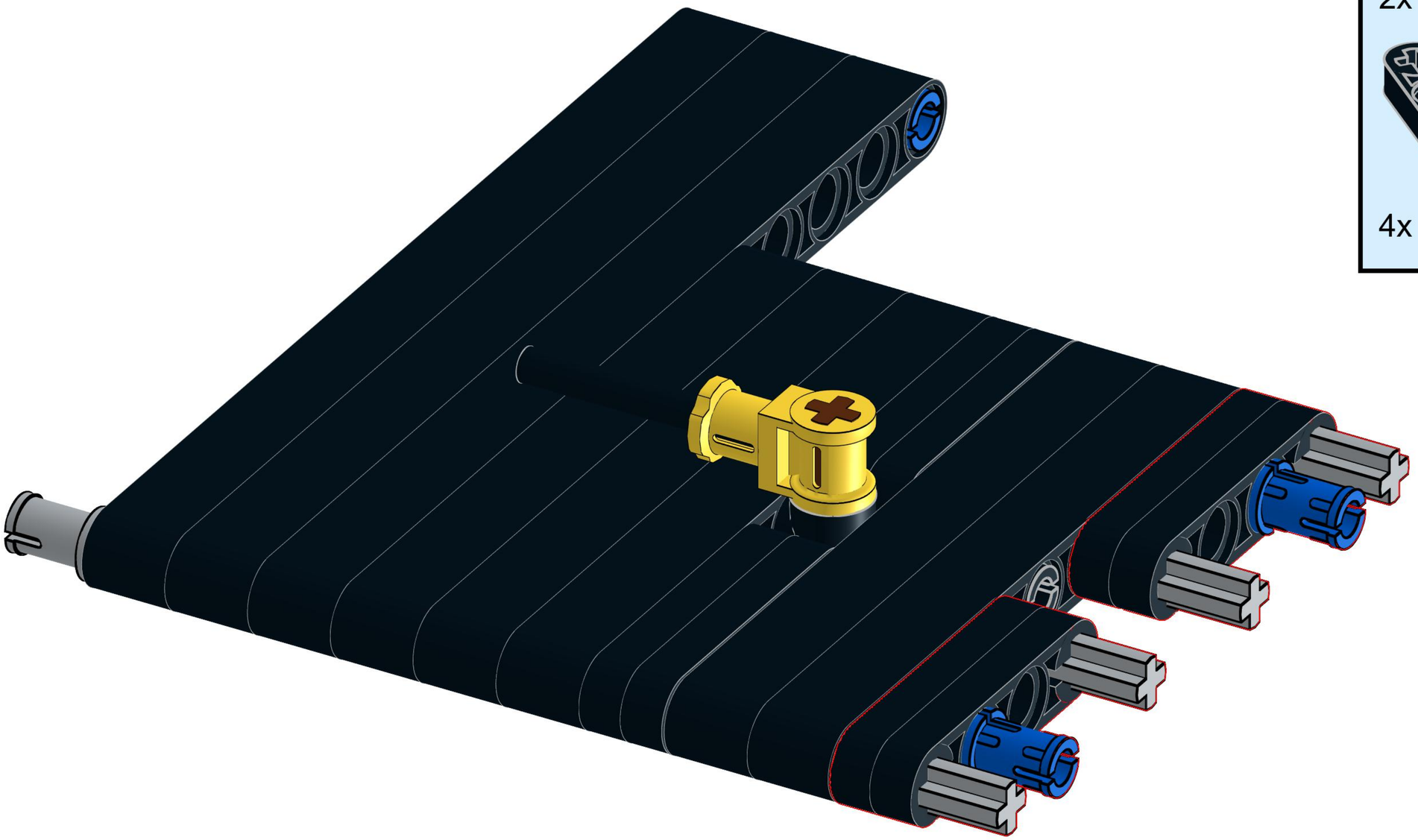

# 125

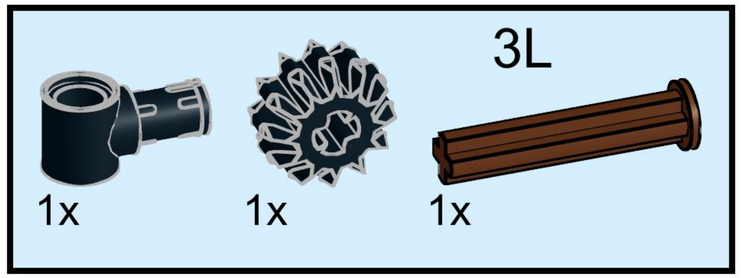


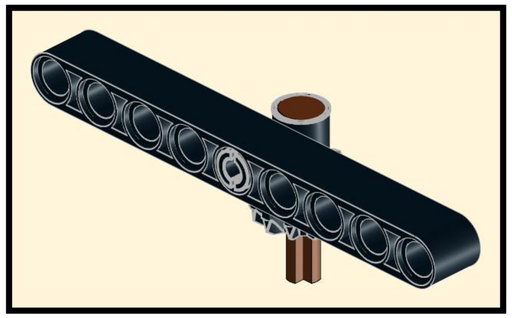

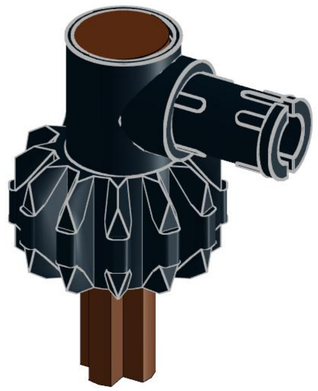

The unattached universal joint installed in a previous step should be attached to this axle, when this assembly is complete and placed in the module.

# 126

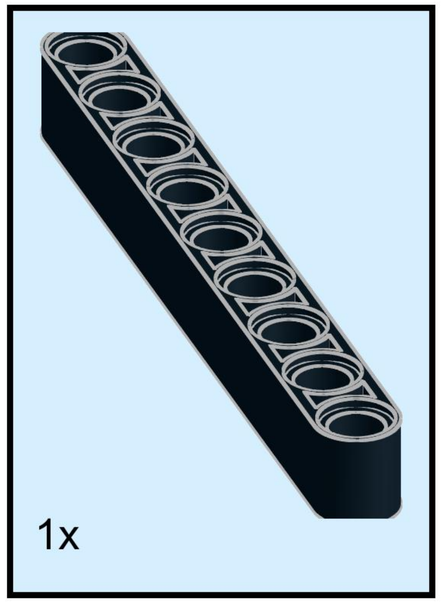


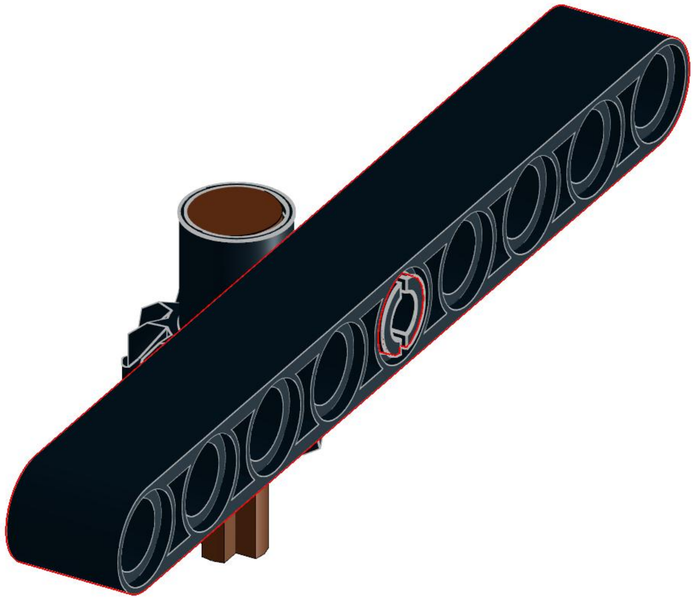

# 127

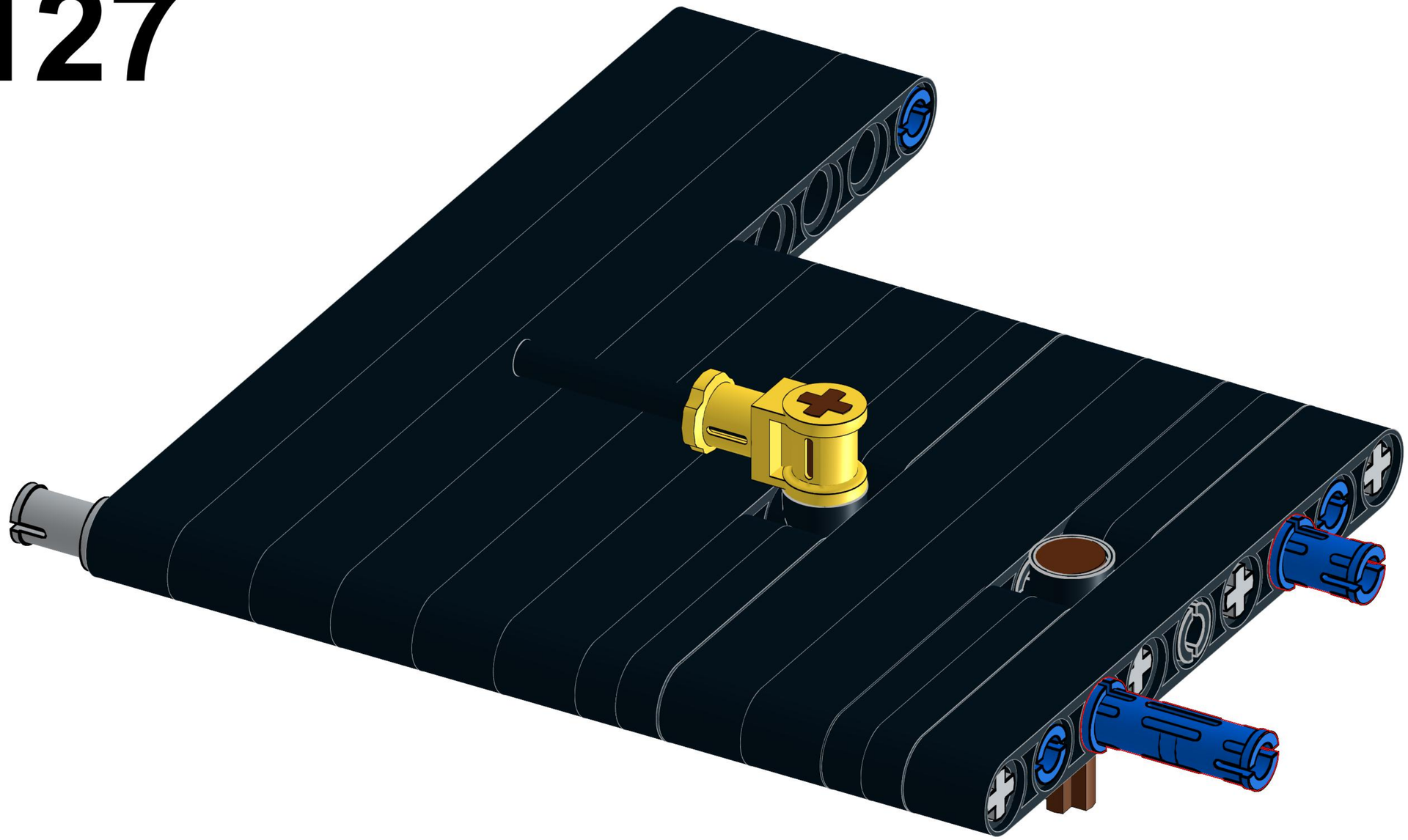

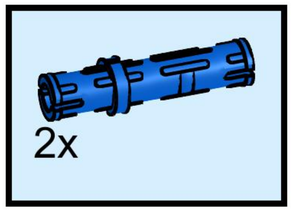

# 128

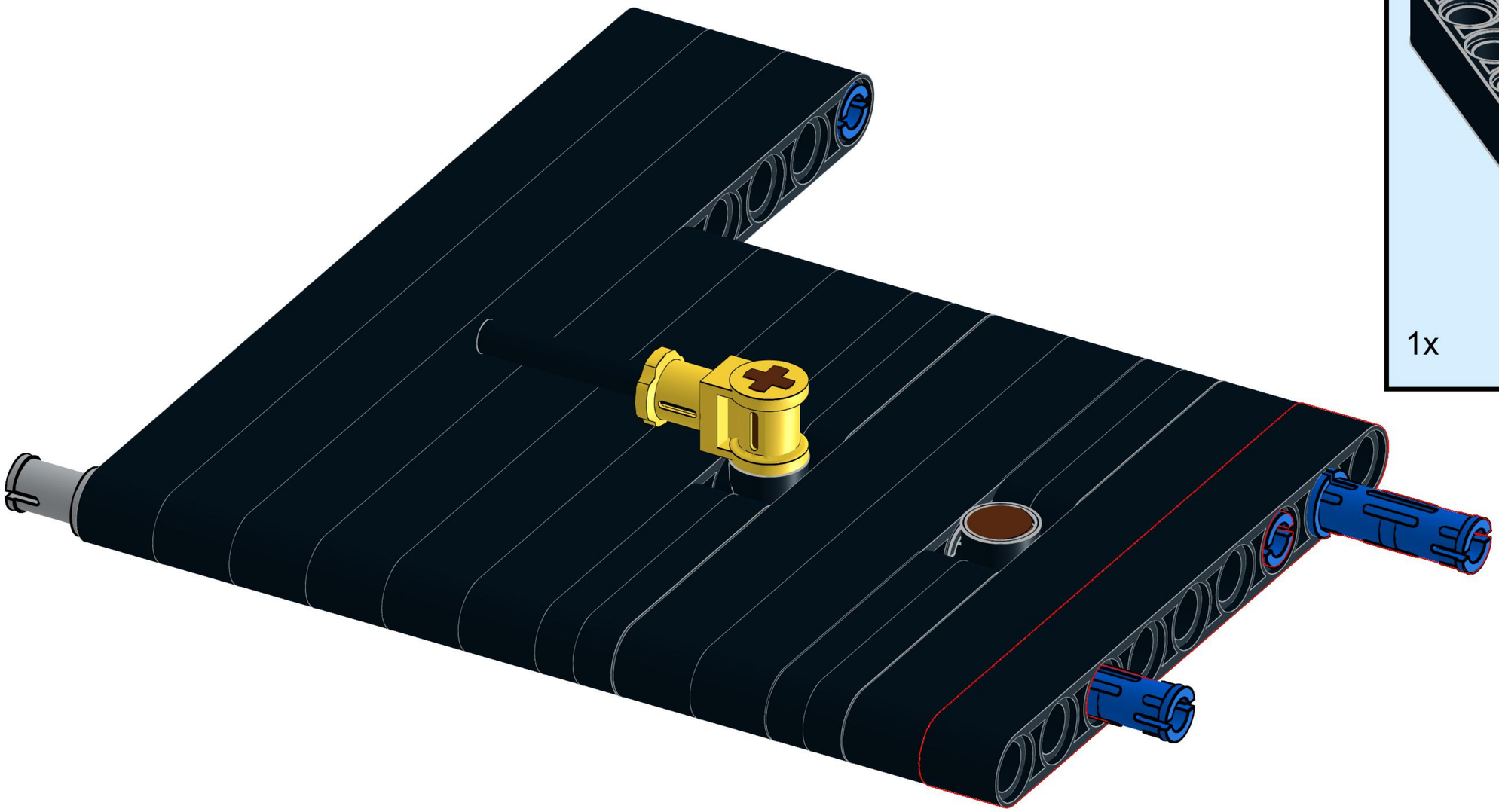

# 129

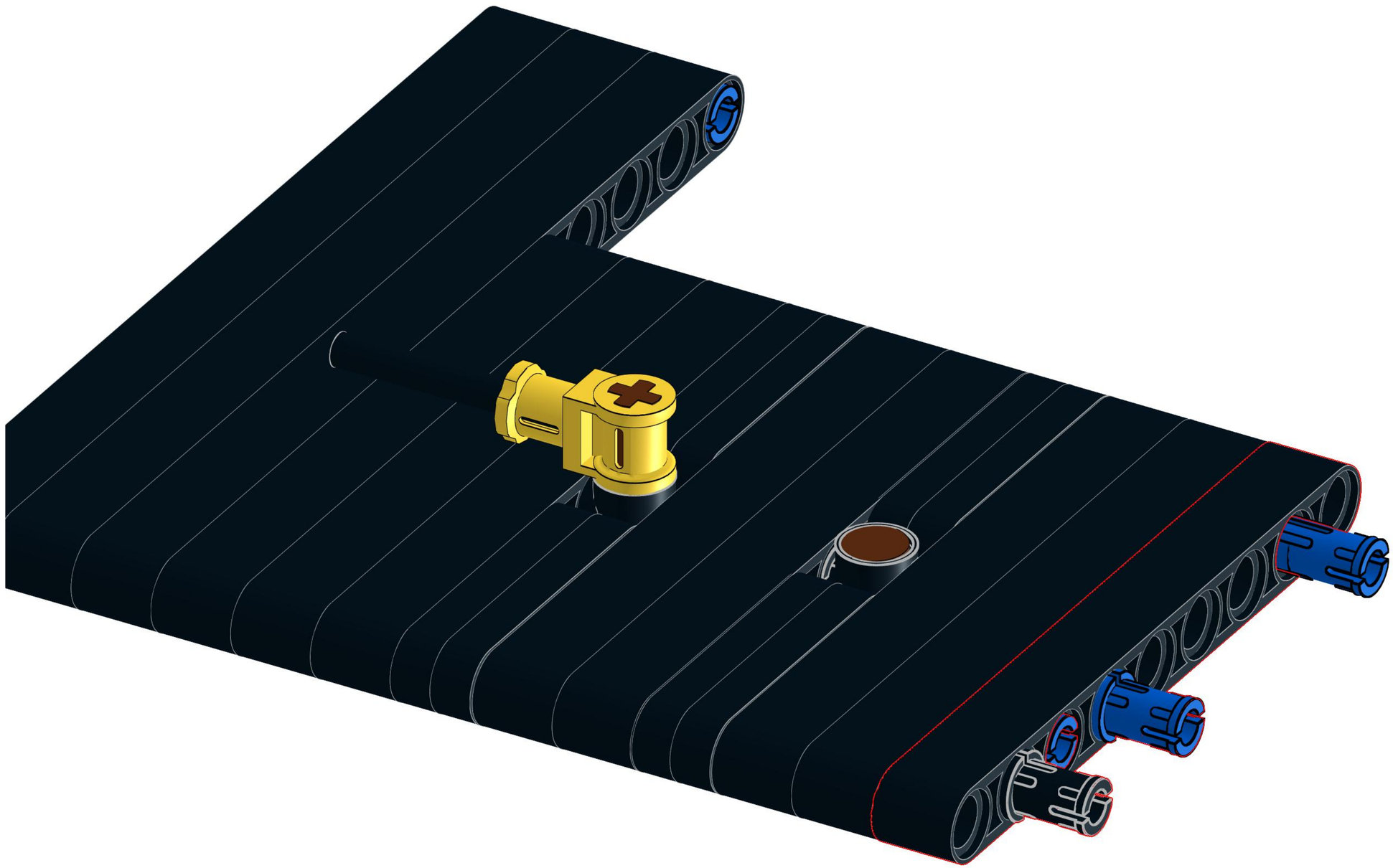

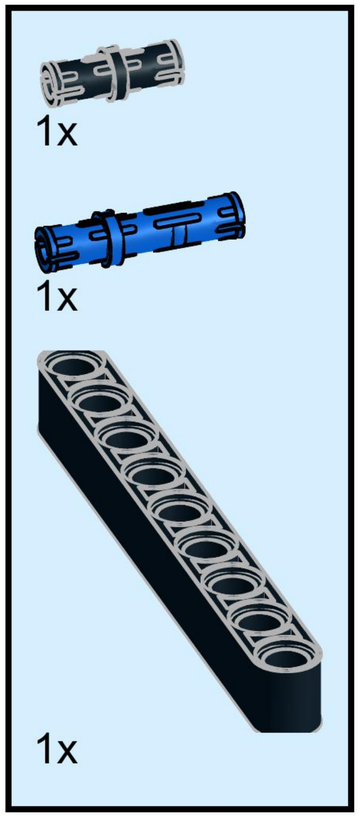

# 130

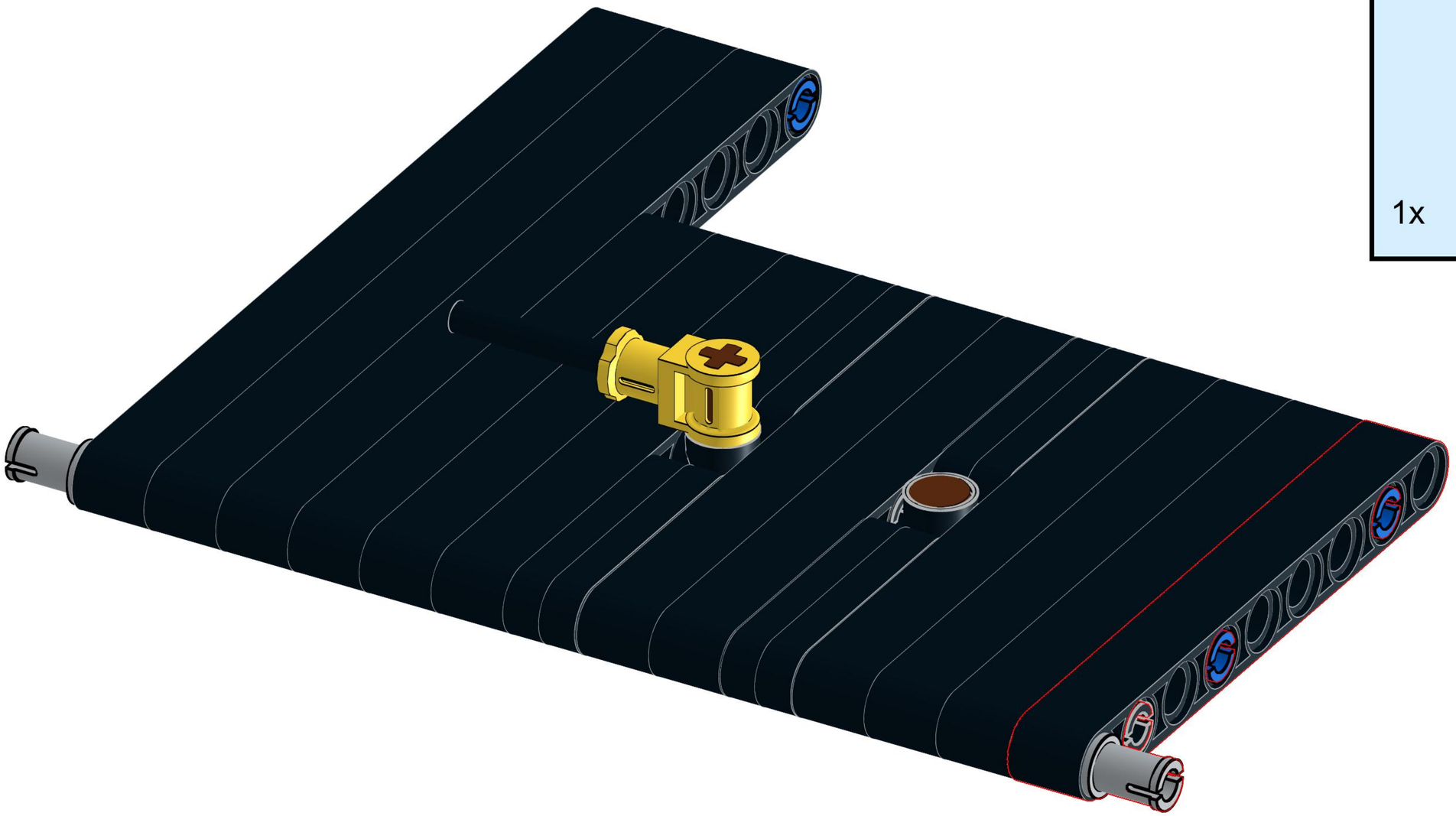

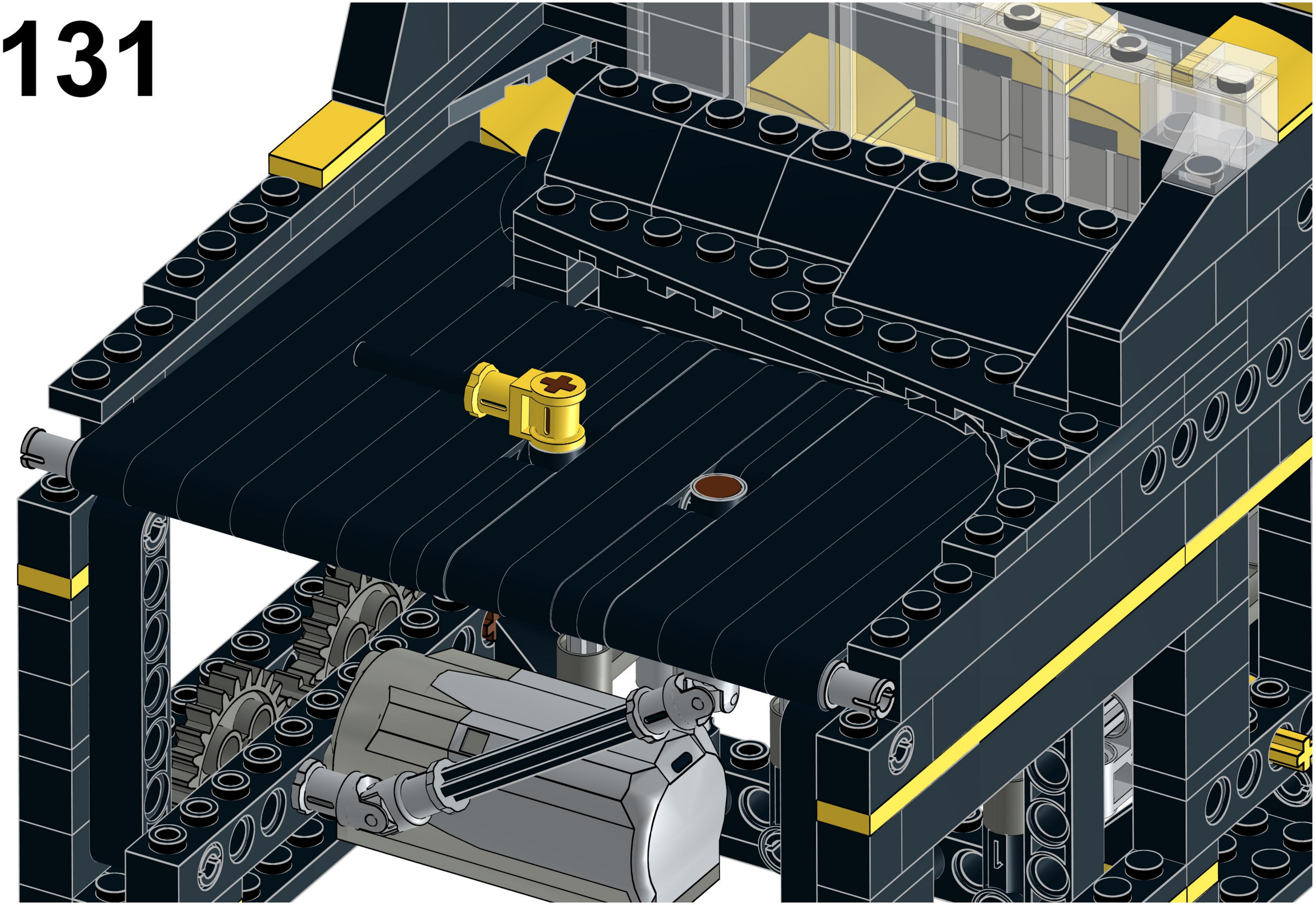

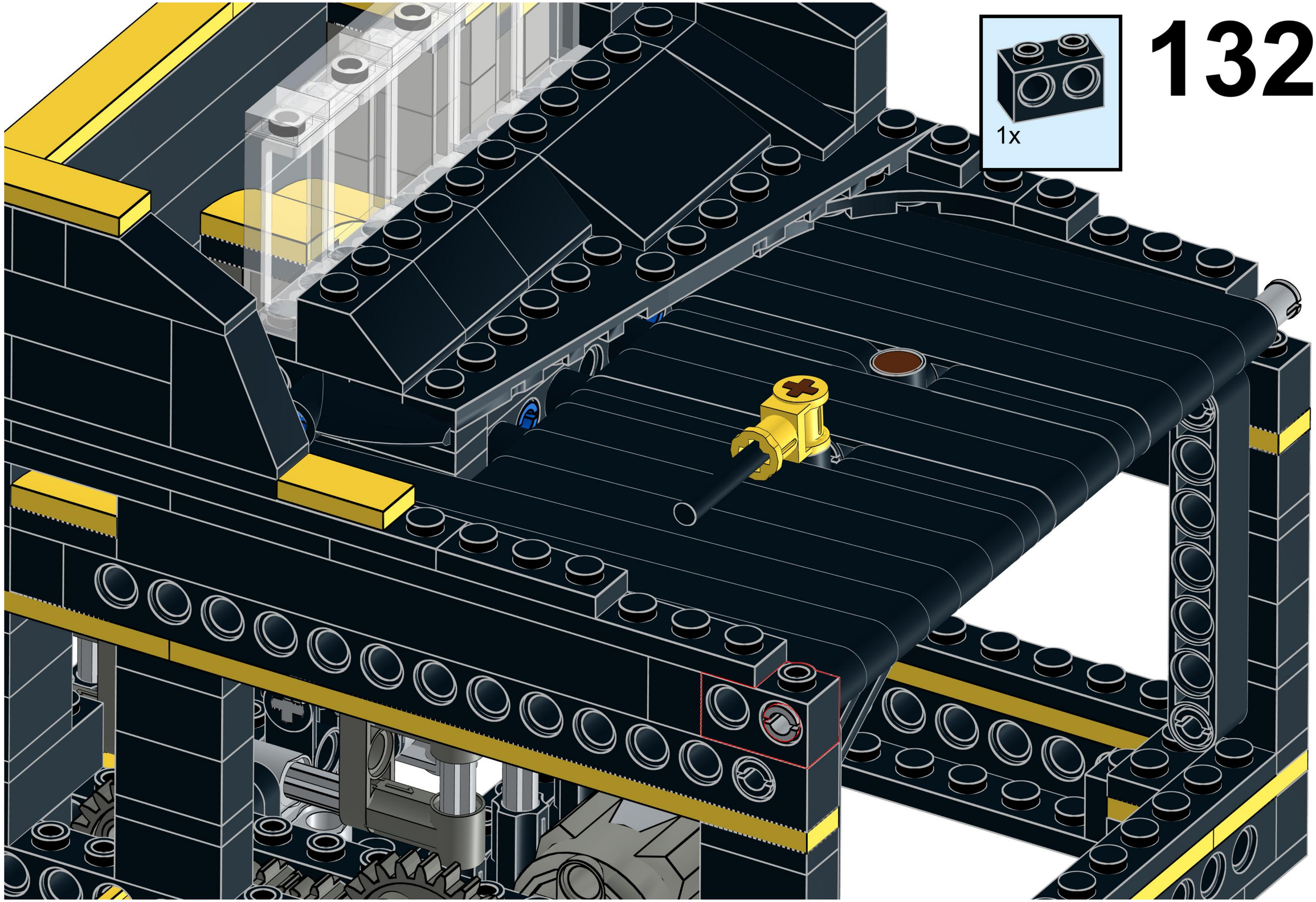


# 132

# 133

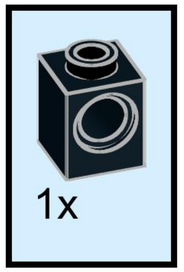


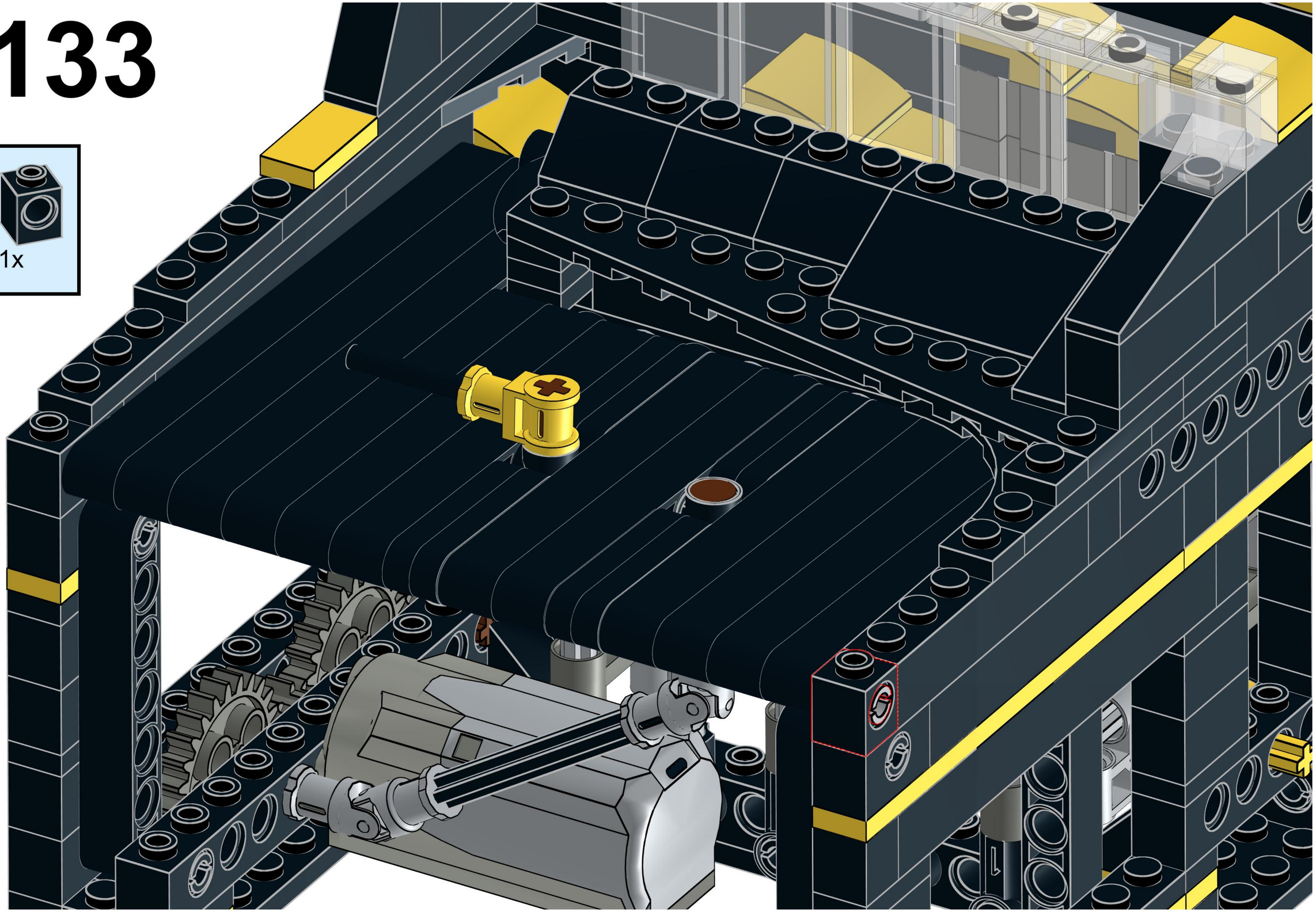

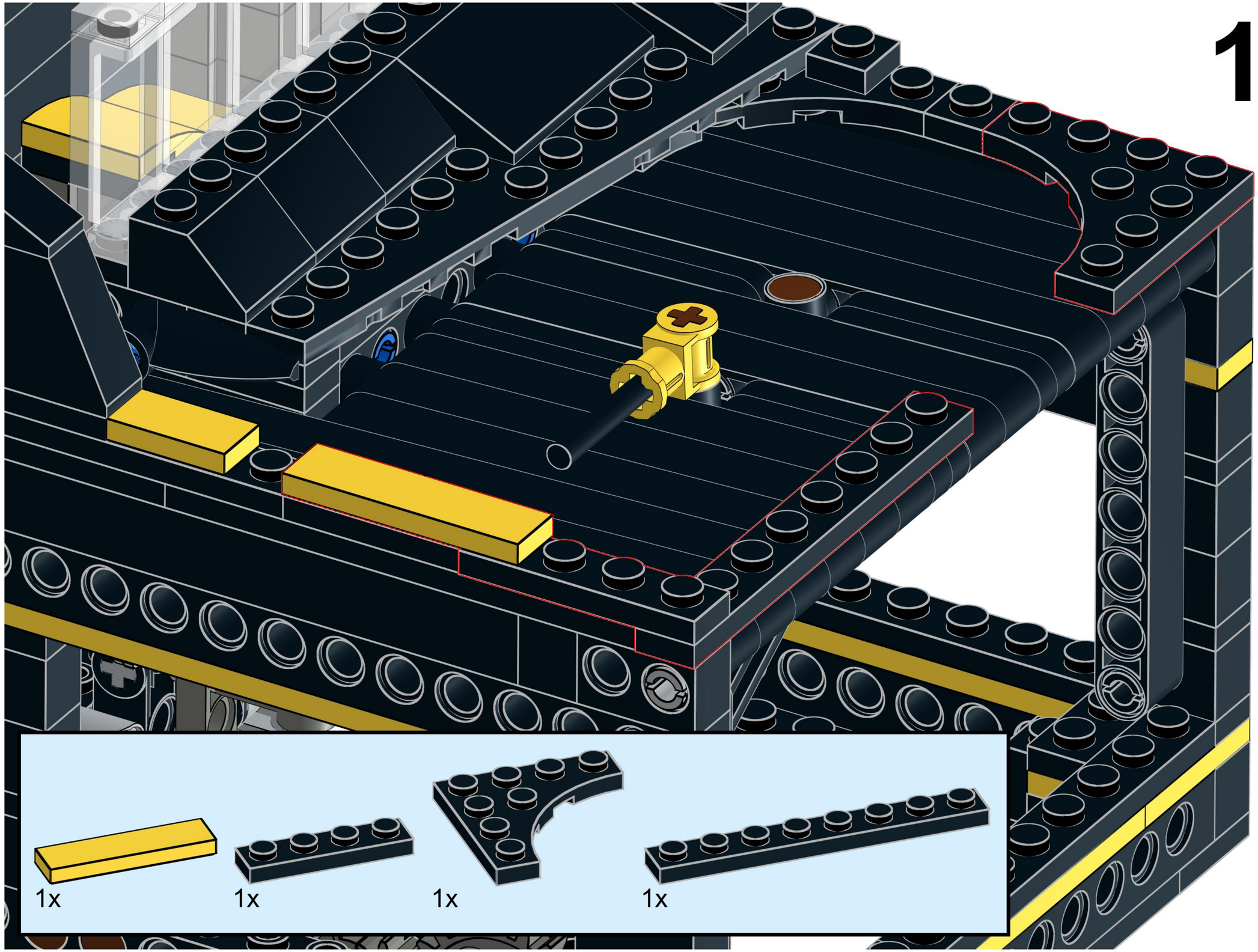
1x
1x
1x
1x

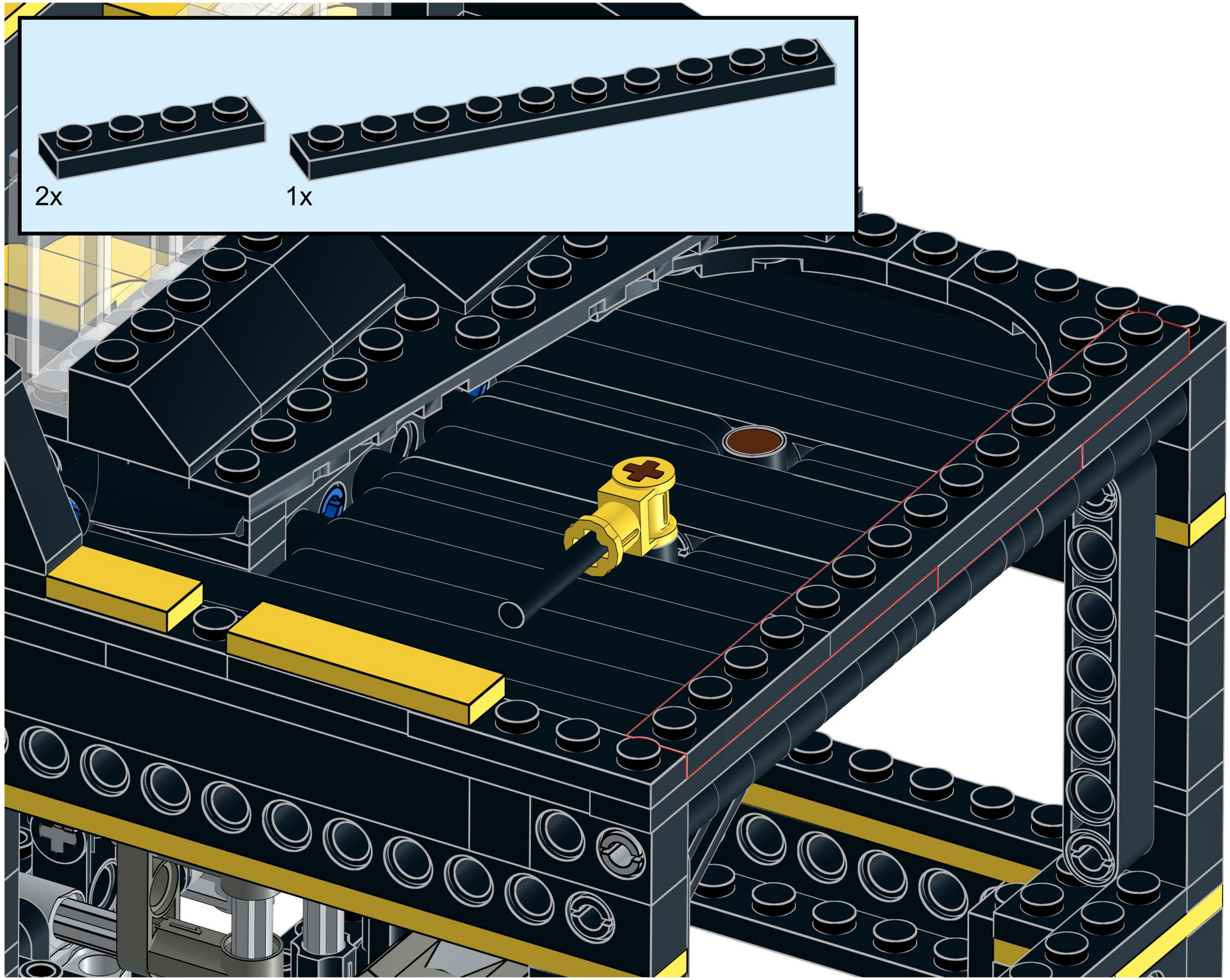
2x
1x

# 136

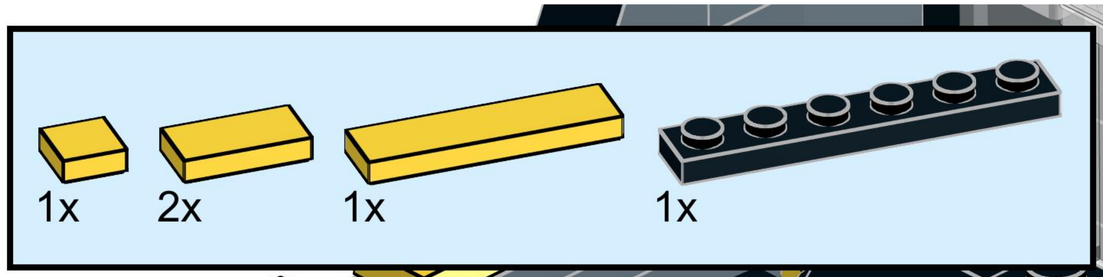

# 137

# 138

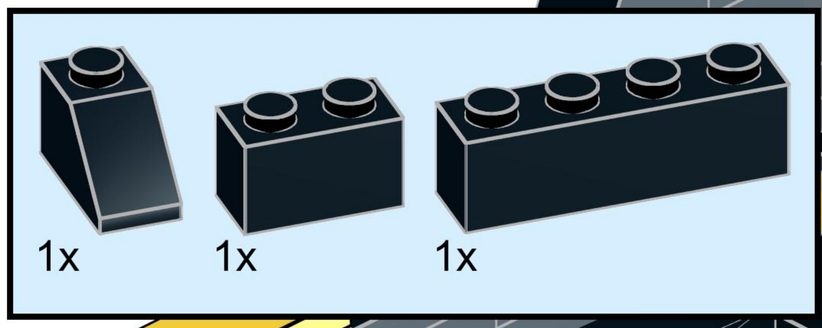

# 139

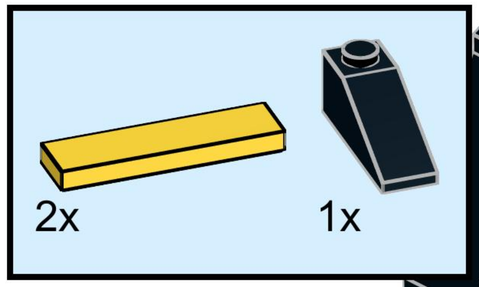

# 140

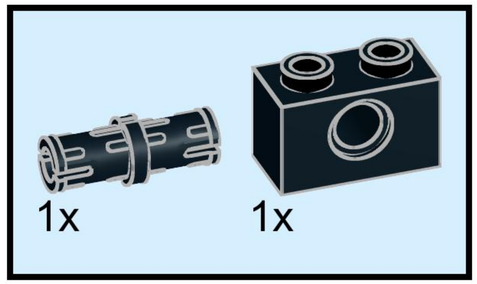


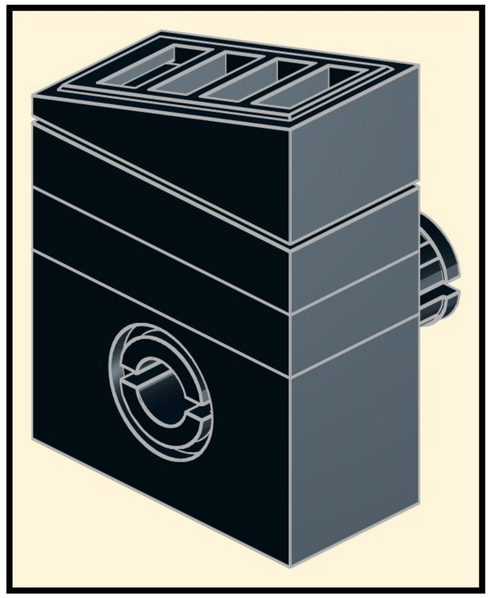

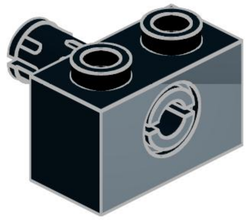

# 141

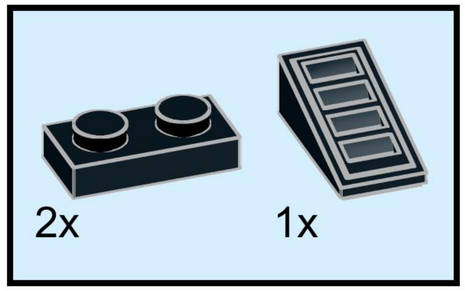


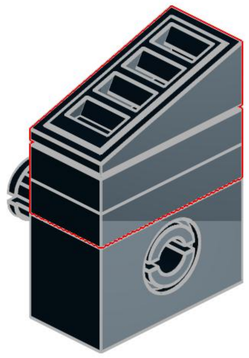

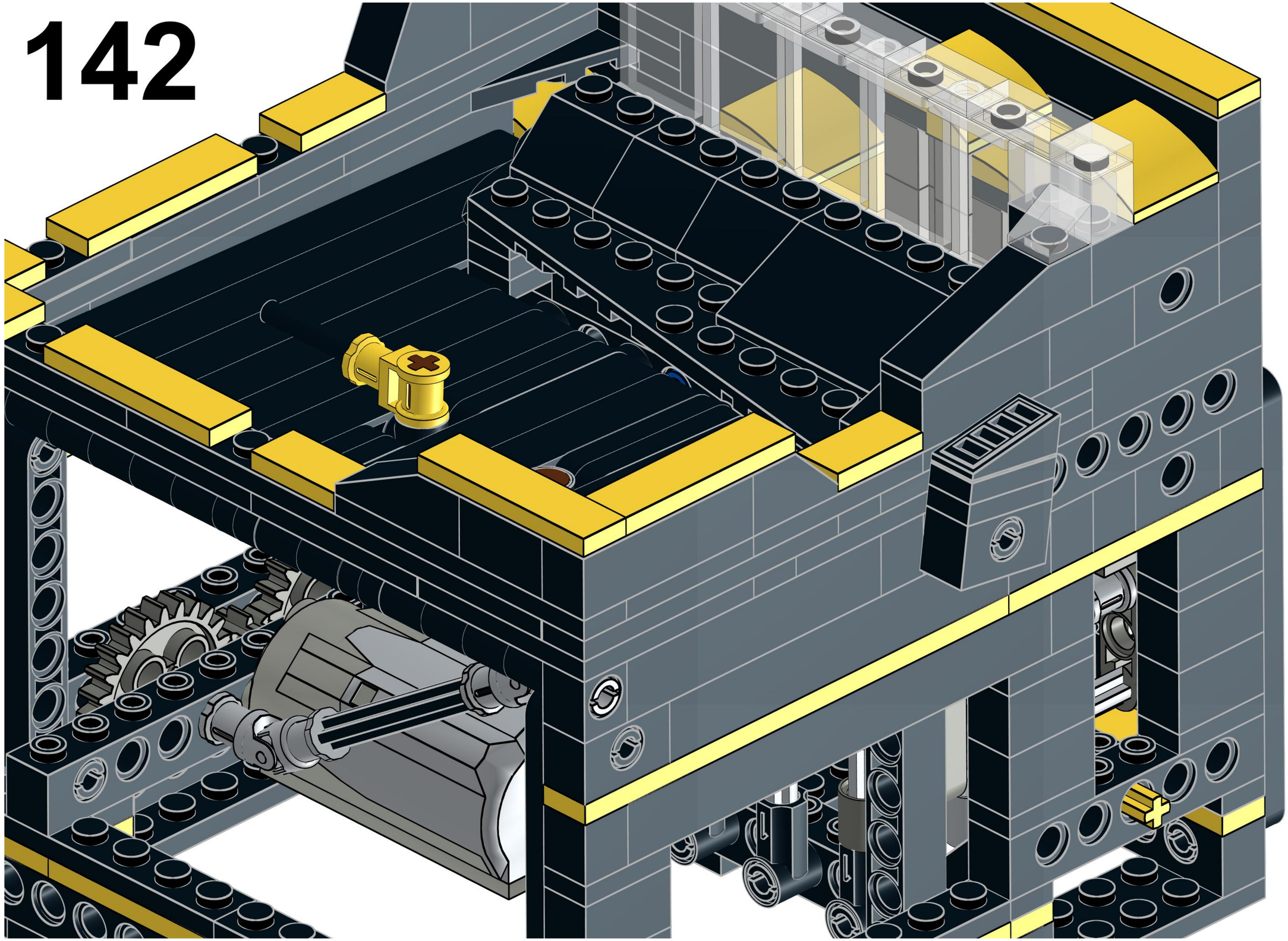

# 143

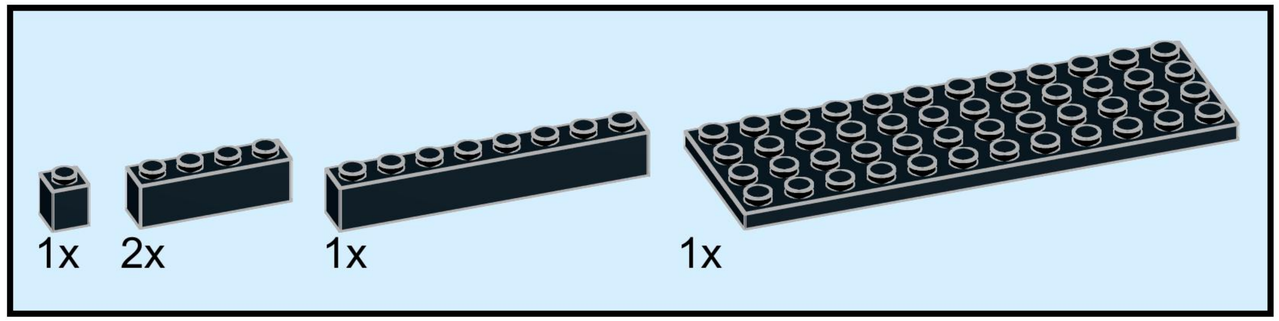


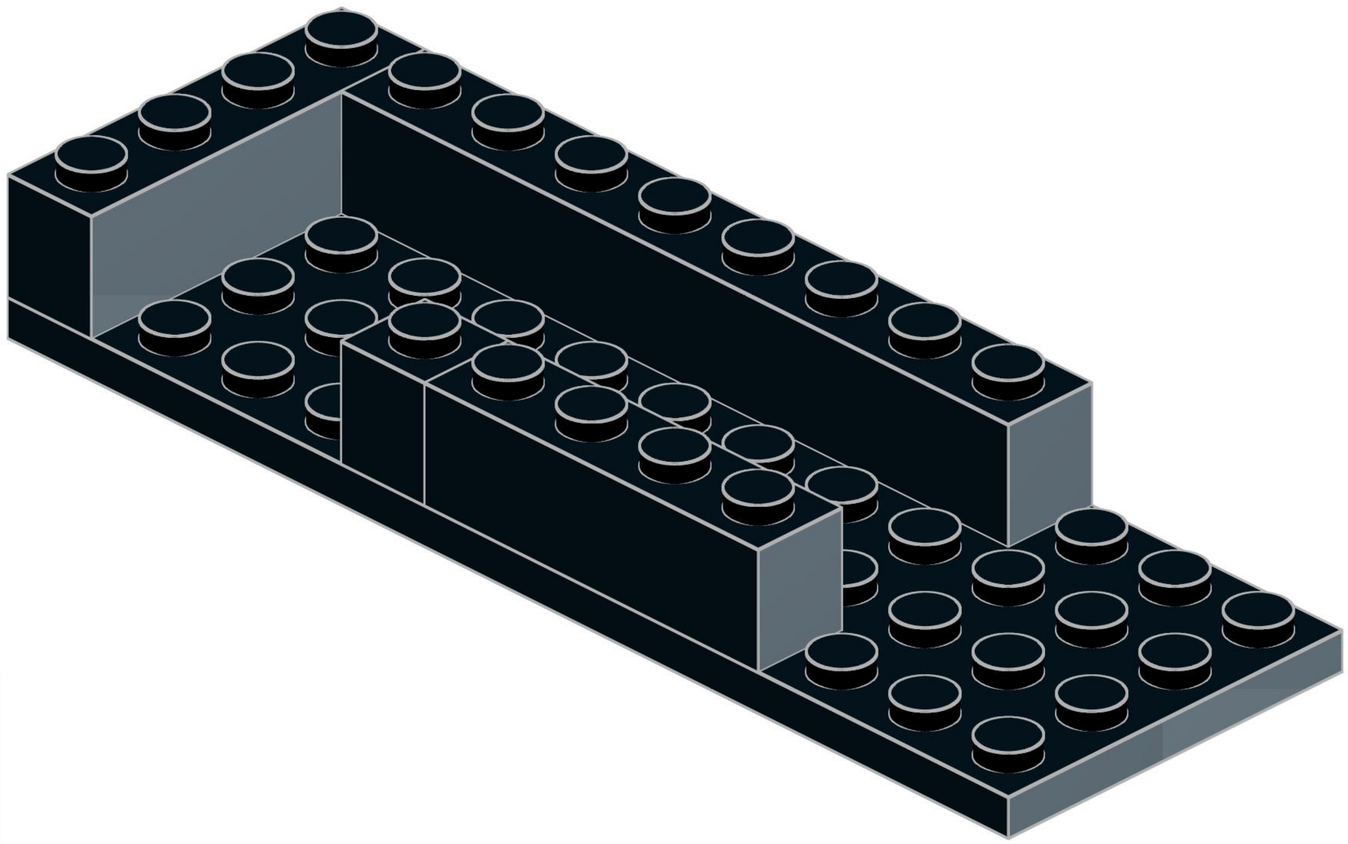

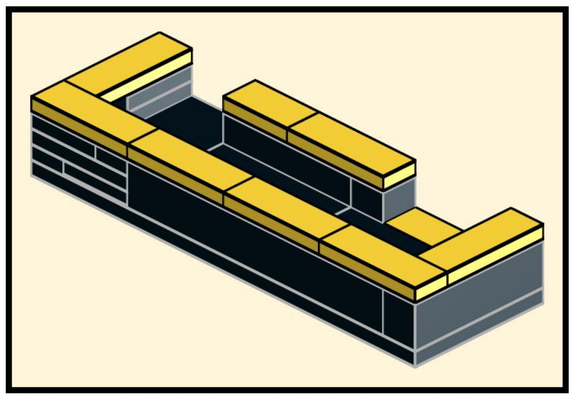

# 144

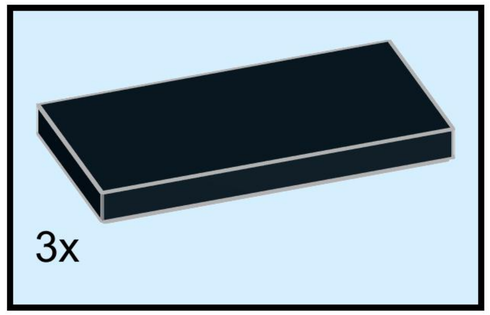


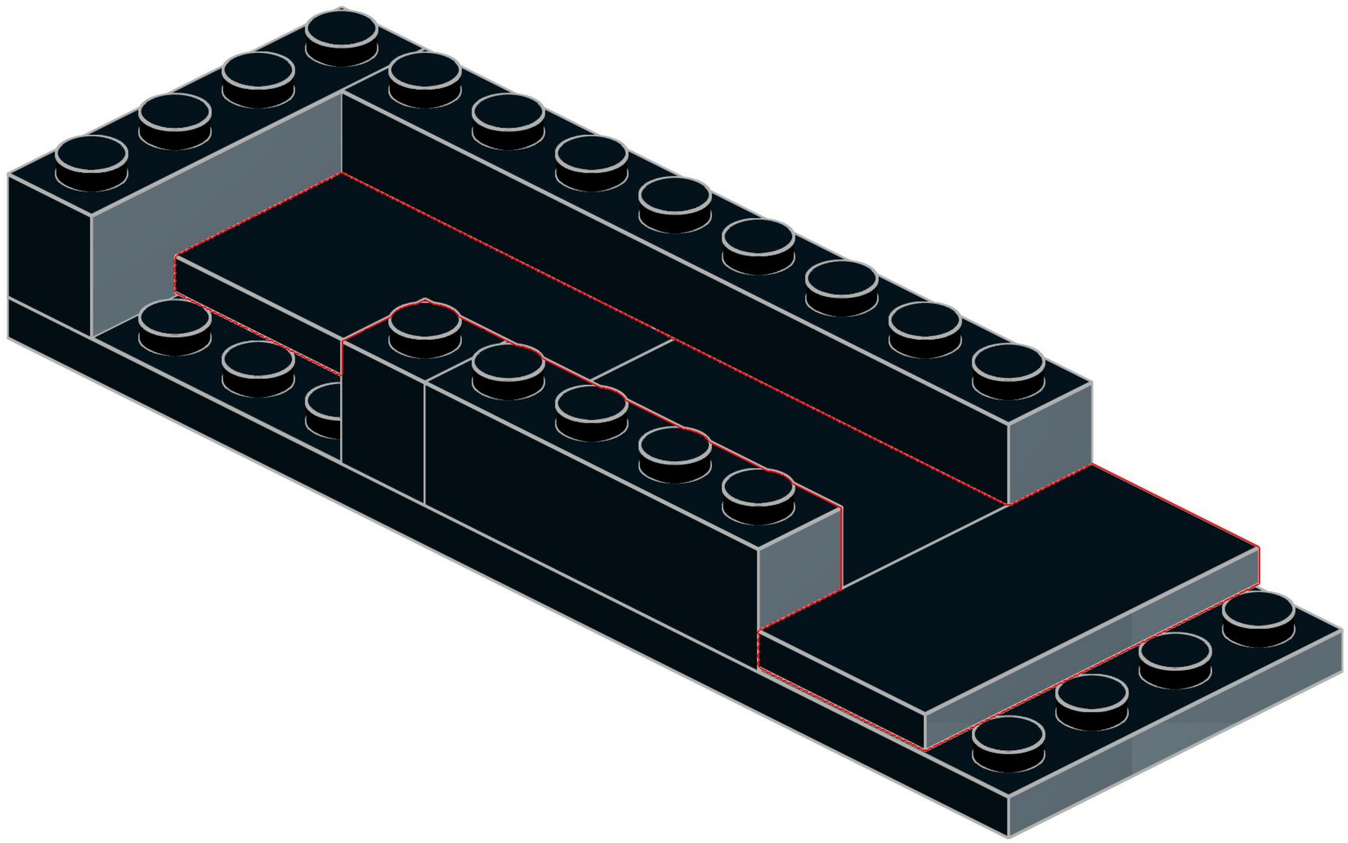

# 145

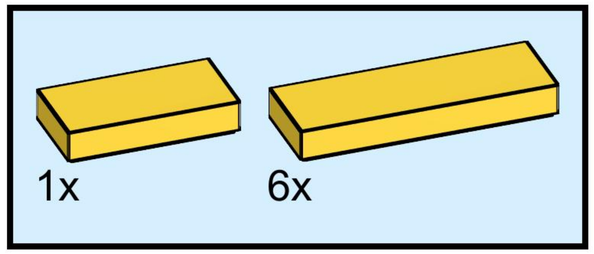


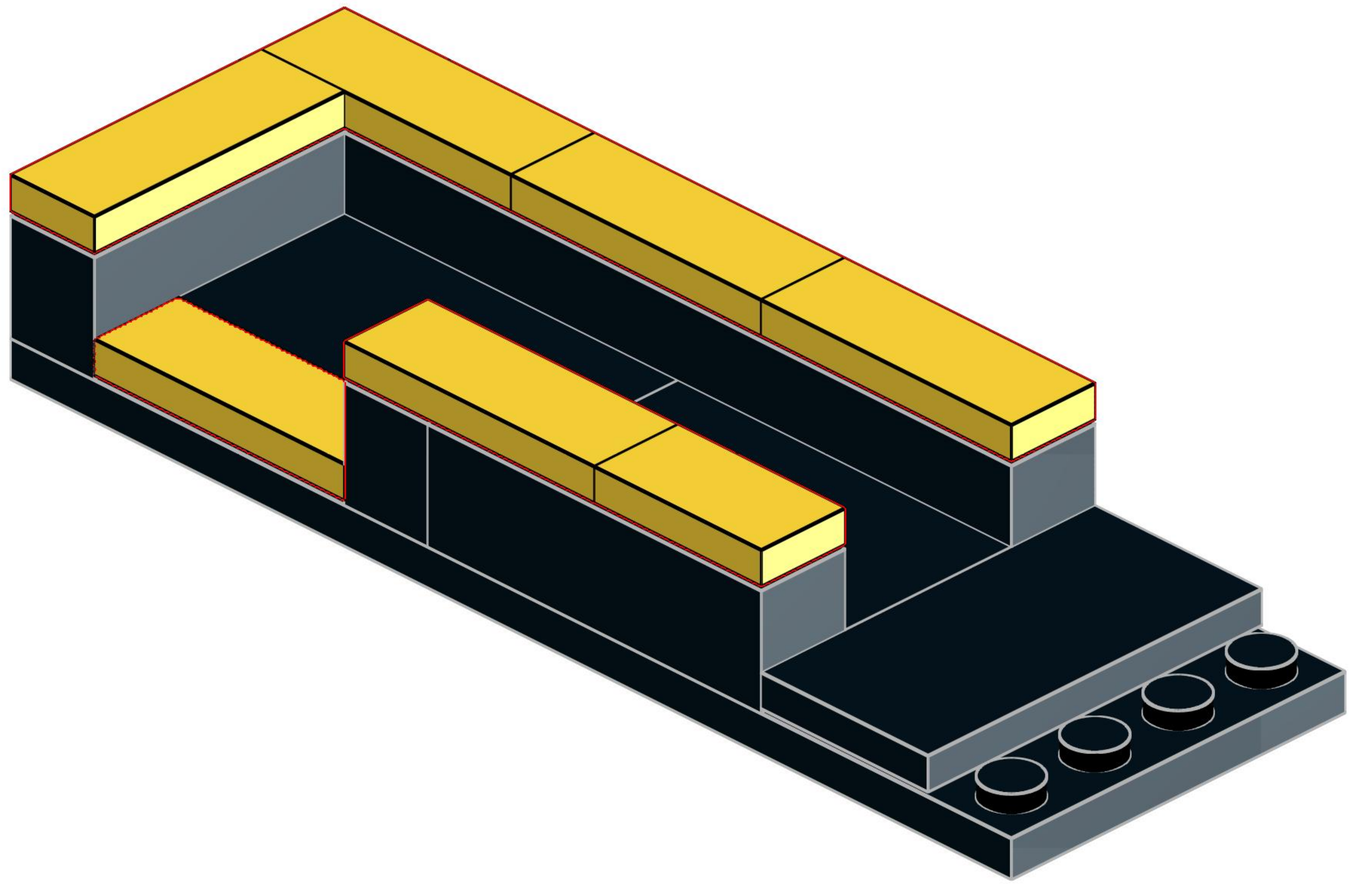

# 146

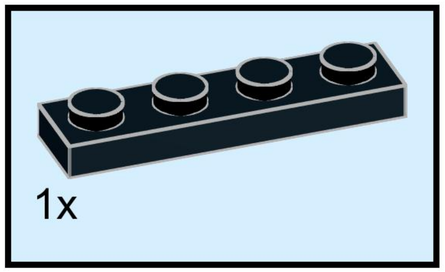


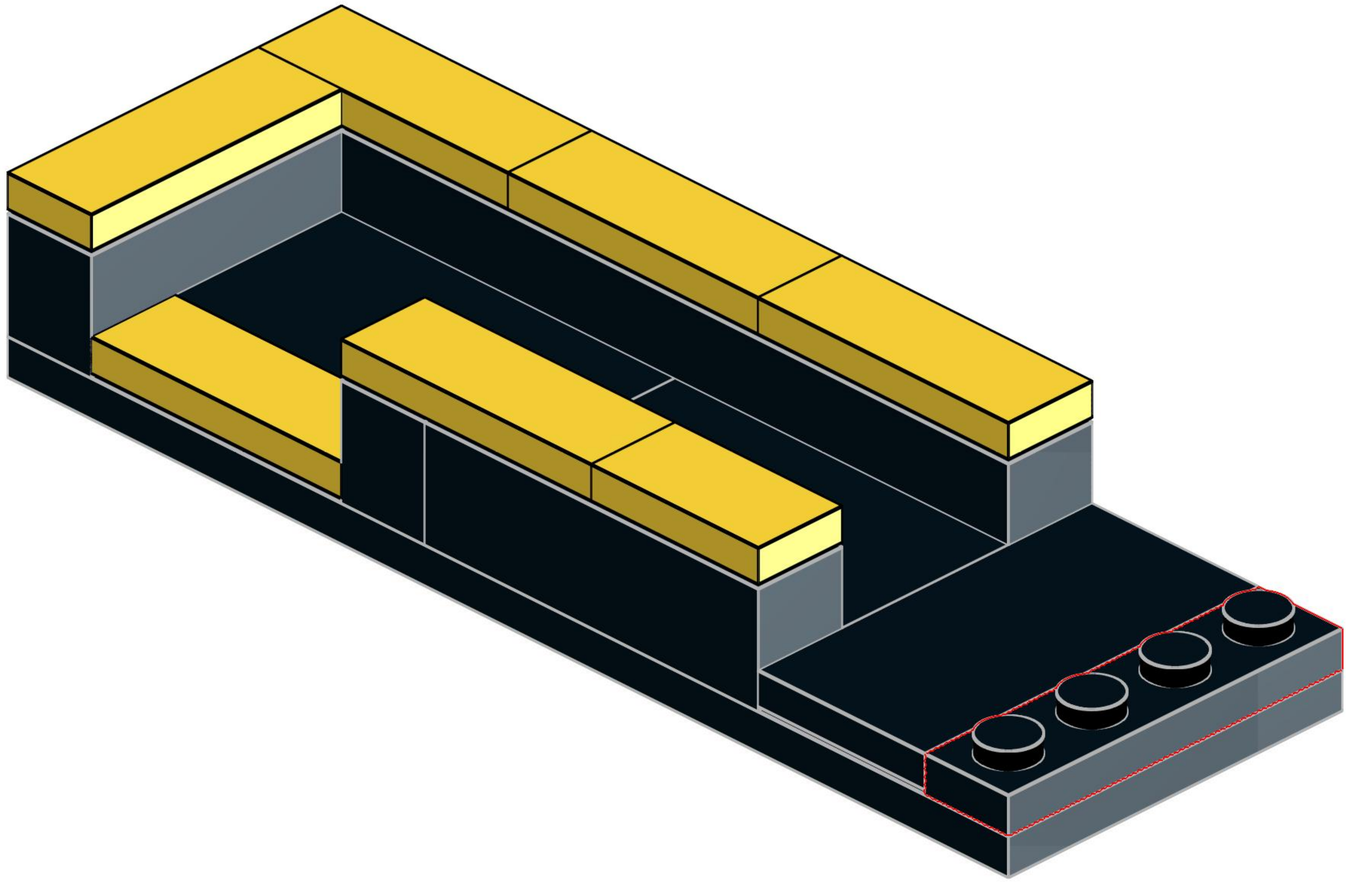

The following steps will complete this output ramp with balls returning back into the module. These parts can be installed mirrored, in the opposite direction, for an output ramp that delivers balls to the next module in a circuit.

# 147

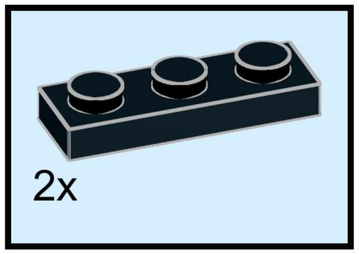


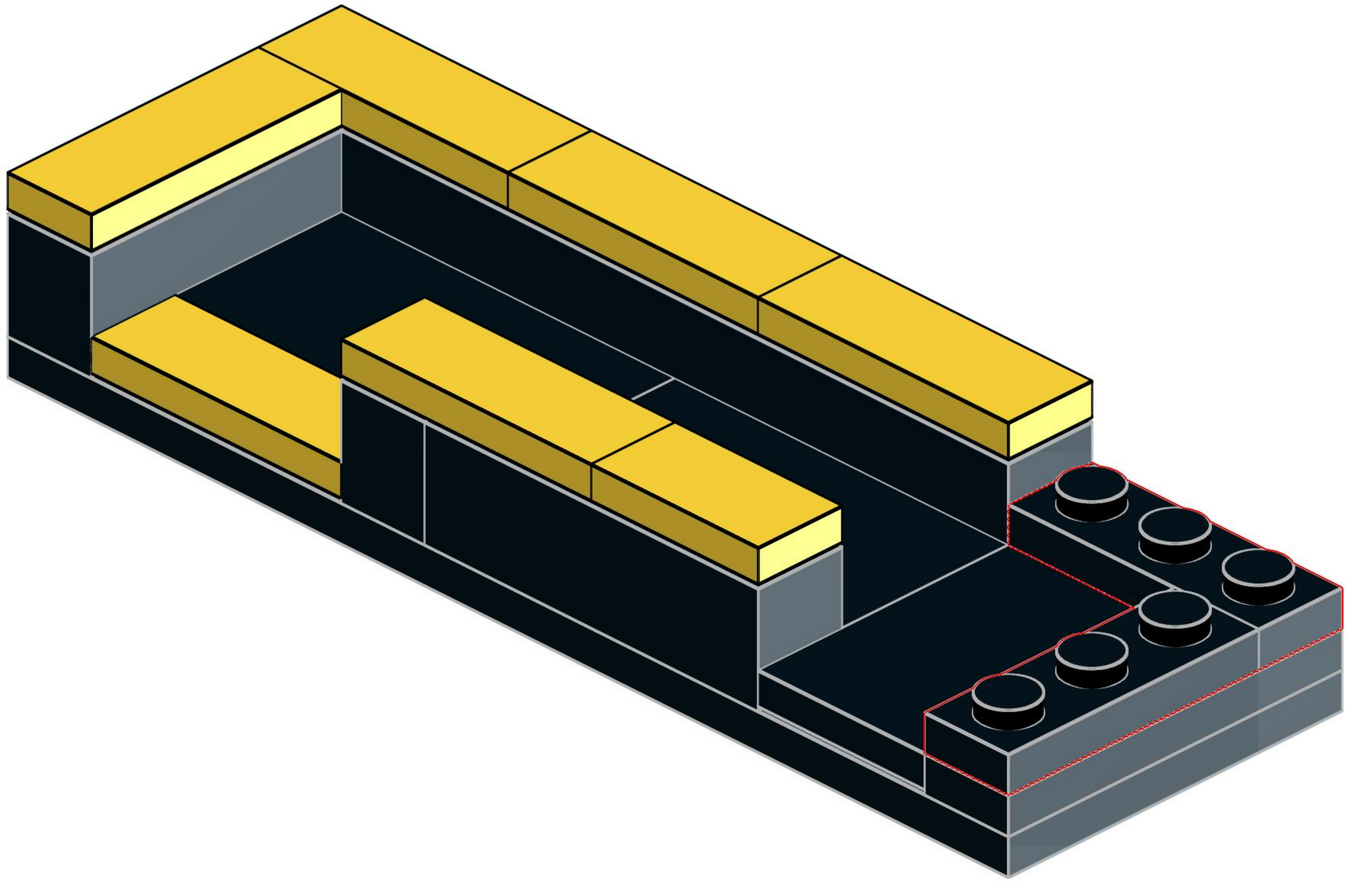

# 148

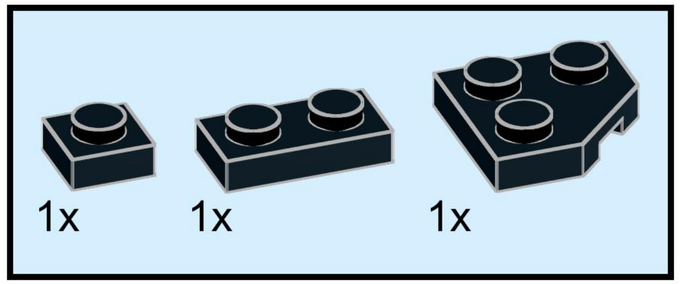


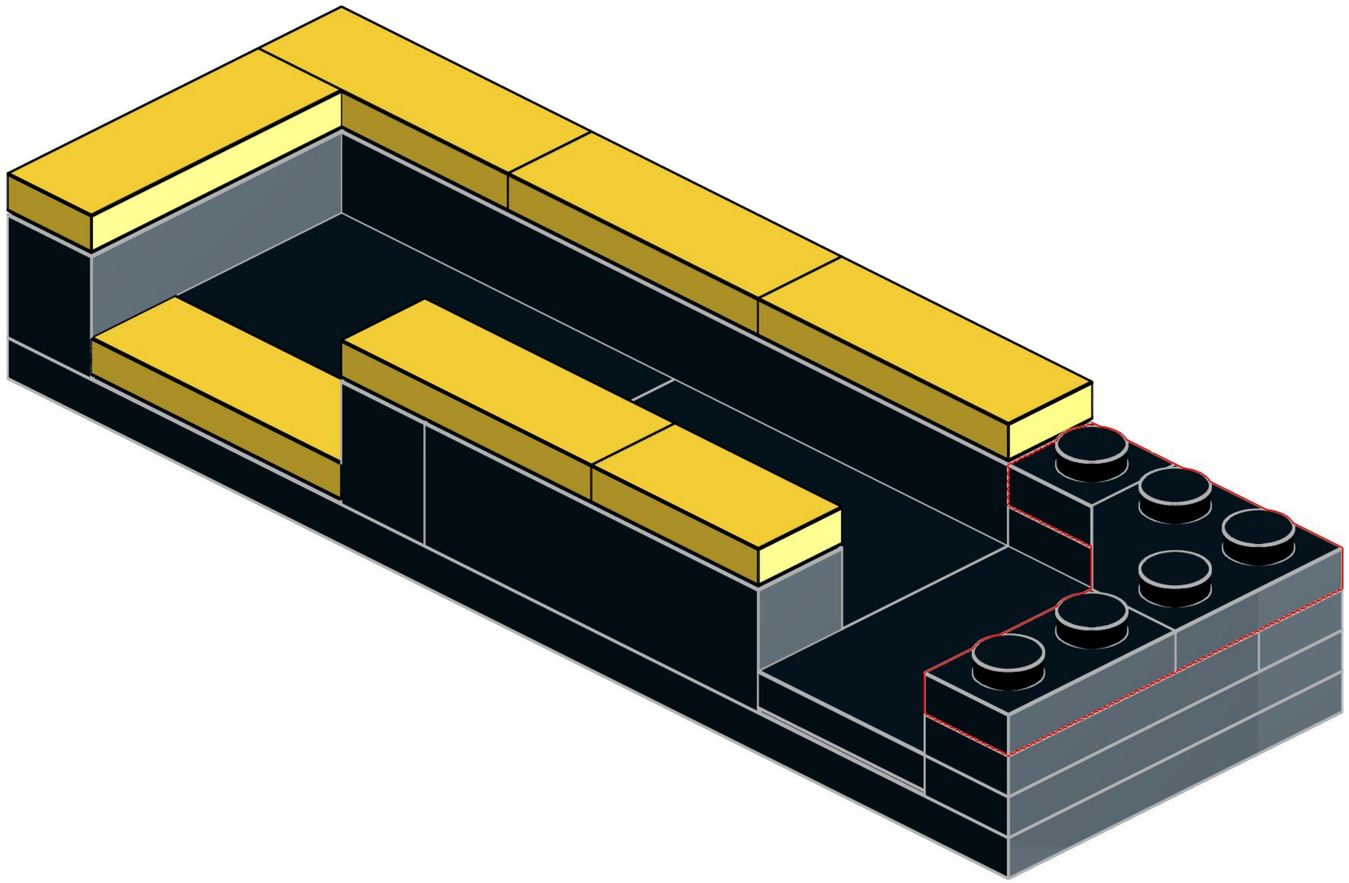

# 149

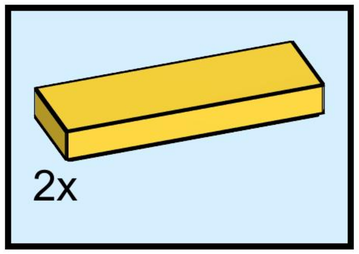


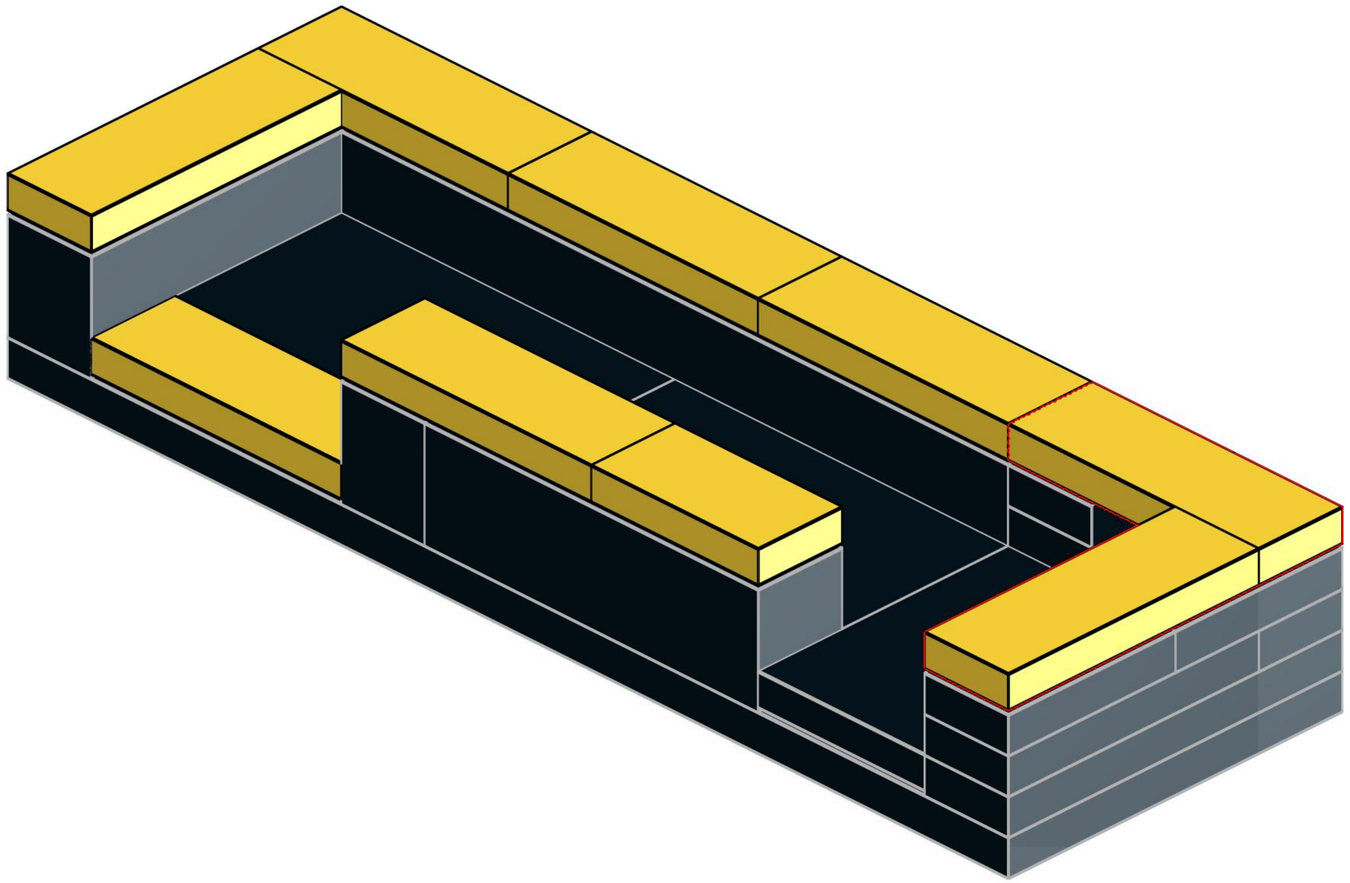

# 150

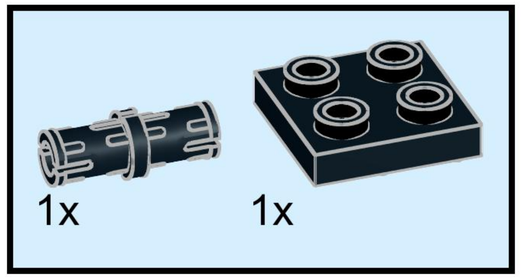


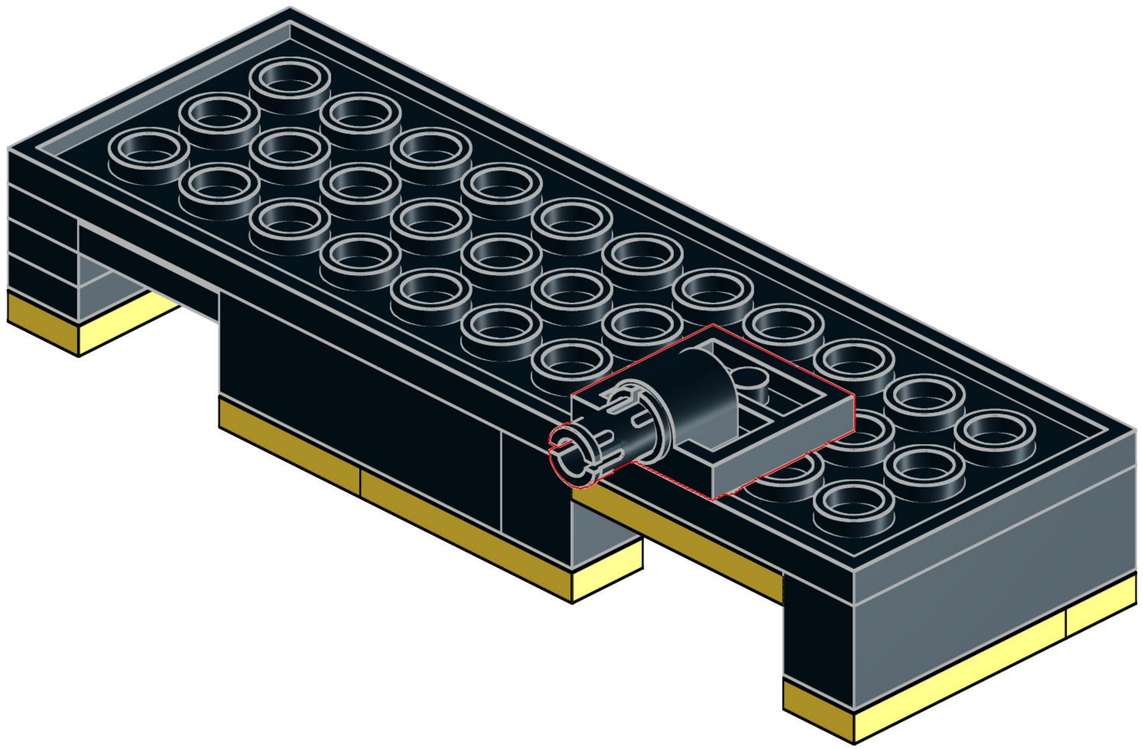

# 151

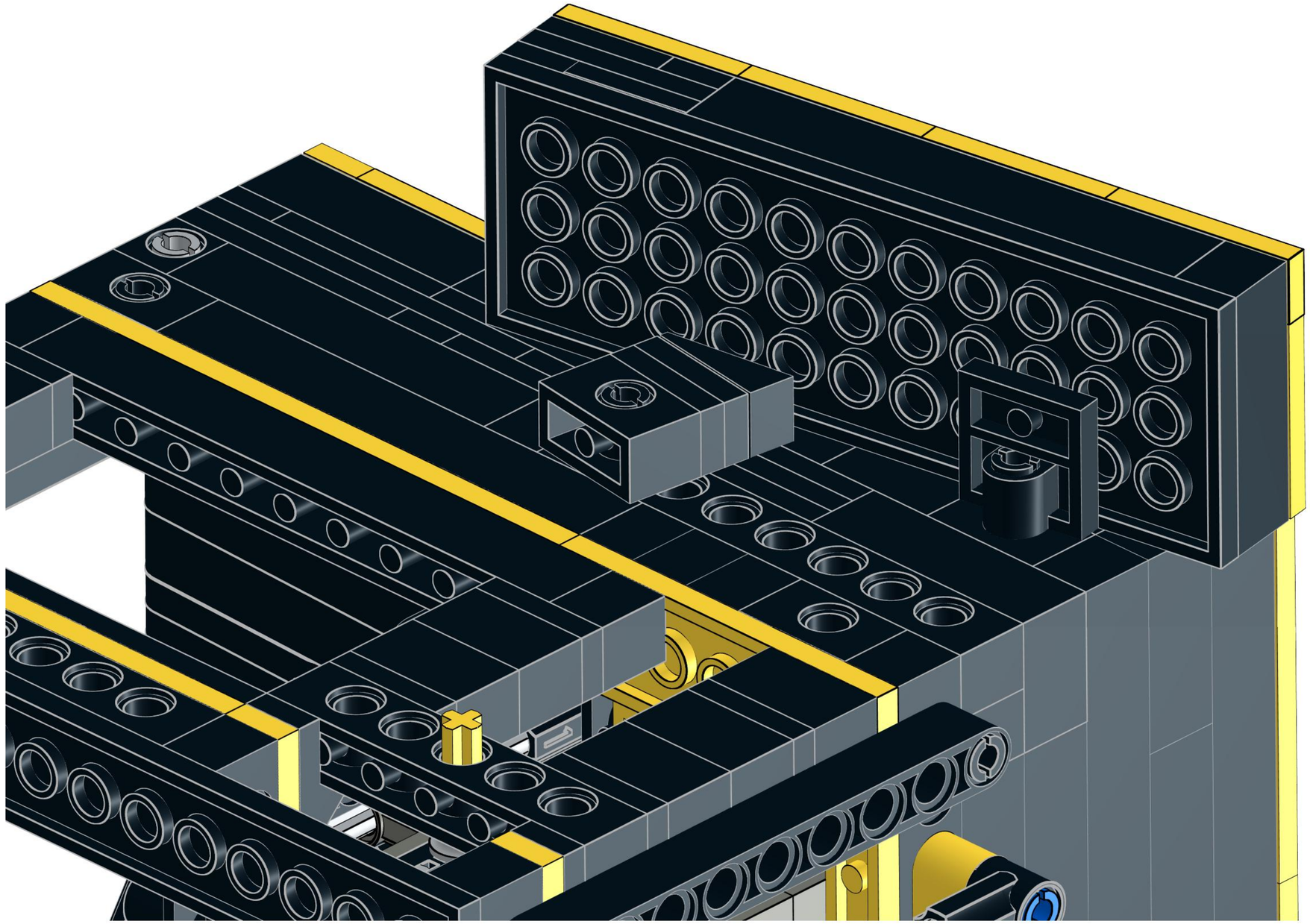

# 152

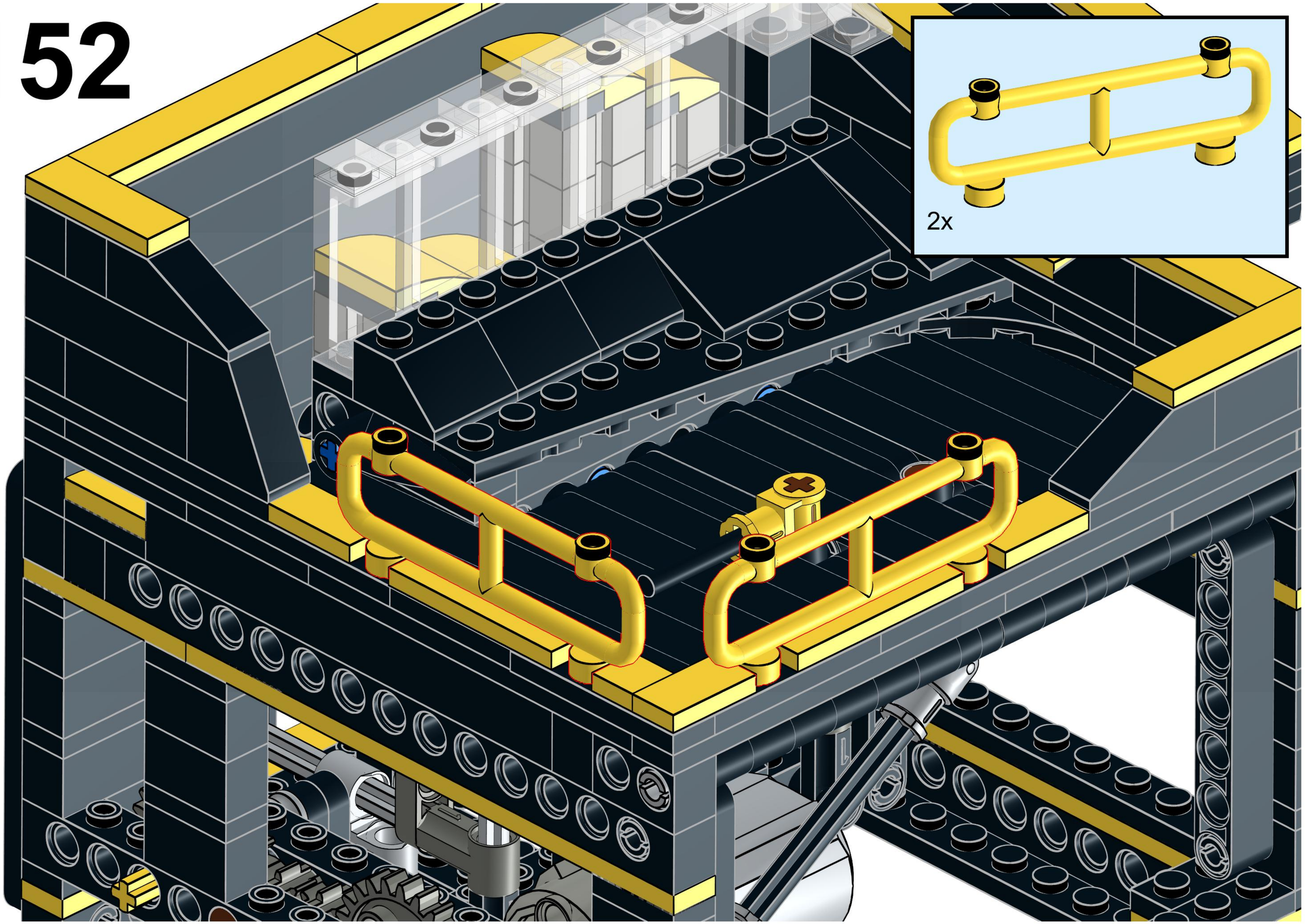

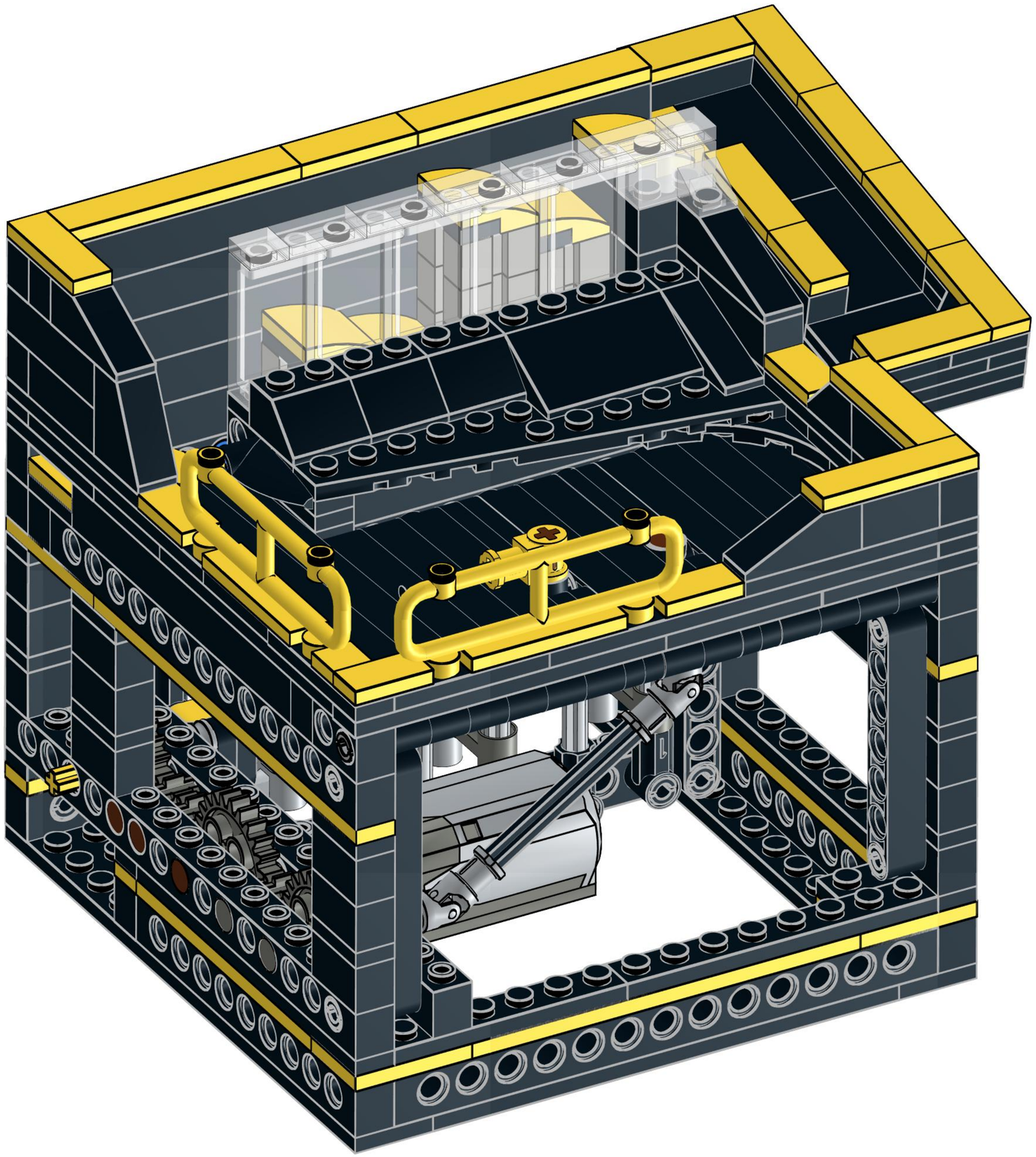

Module Revision notes

Version 1.0 - Initial Release

Version 1.1 - Updated Instructions to highlight the importance of the 2x2 Bent Cross Blocks being correctly oriented when building the crank shaft. No parts were changed.  05-Jan-19.

Version 1.2 - Changed the standard black 4L axles connected to the motor and universal joints to grey 4L axles with flat end stops.

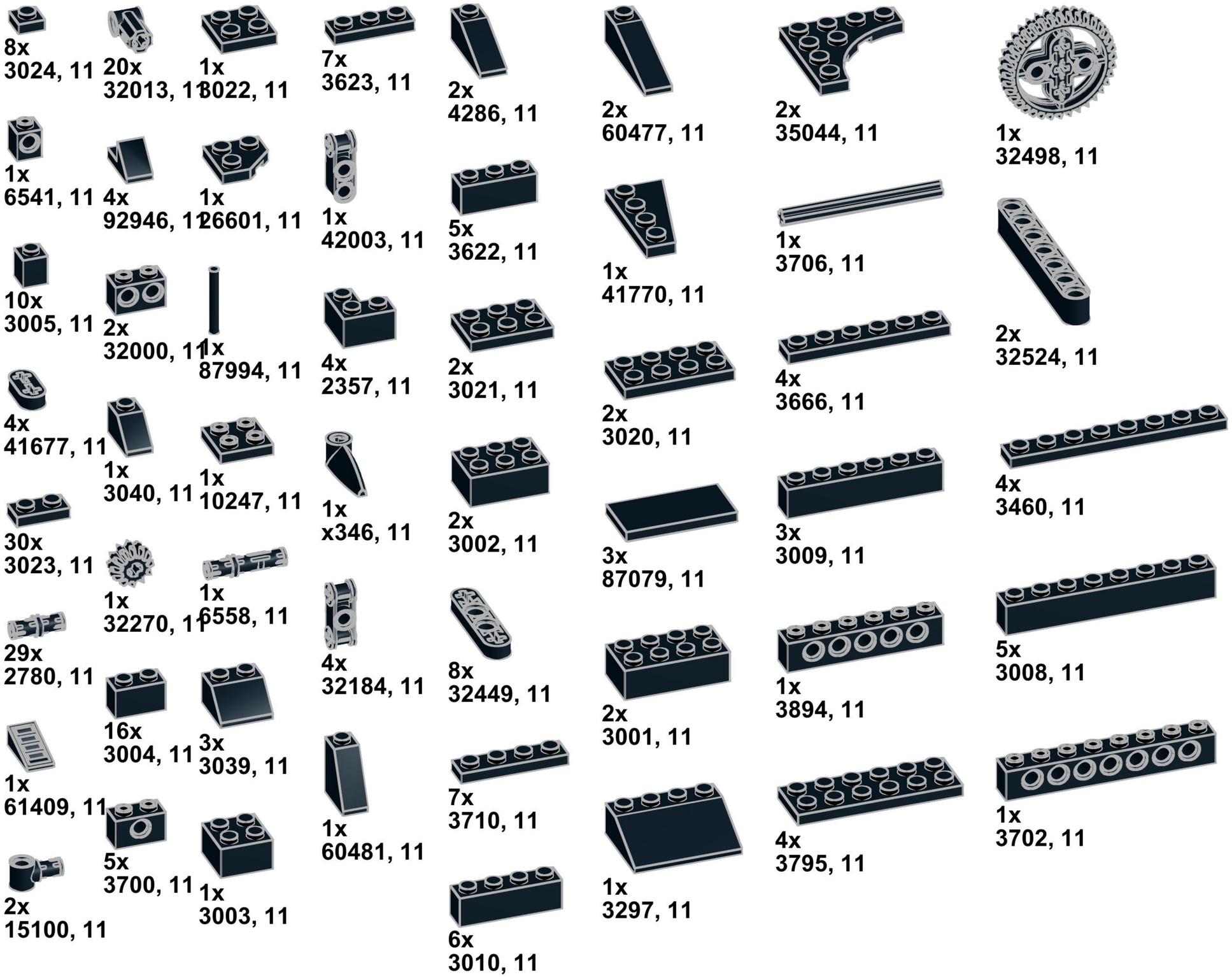
8x
3024, 11
20x
32013, 11
1x
3022, 11
7x
3623, 11
2x
4286, 11
2x
60477, 11
2x
35044, 11
1x
32498, 11
1x
6541, 11
4x
92946, 11
1x
26601, 11
1x
42003, 11
5x
3622, 11
1x
41770, 11
1x
3706, 11
10x
3005, 11
2x
32000, 11
1x
87994, 11
4x
2357, 11
2x
3021, 11
4x
3666, 11
2x
32524, 11
4x
41677, 11
1x
3040, 11
1x
10247, 11
1x
x346, 11
2x
3002, 11
2x
3020, 11
4x
3460, 11
30x
3023, 11
1x
32270, 11
1x
6558, 11
3x
87079, 11
3x
3009, 11
29x
2780, 11
4x
32184, 11
8x
32449, 11
2x
3001, 11
1x
3894, 11
5x
3008, 11
16x
3004, 11
3x
3039, 11
1x
61409, 11
1x
60481, 11
7x
3710, 11
1x
3297, 11
4x
3795, 11
1x
3702, 11
5x
3700, 11
1x
3003, 11
2x
15100, 11
6x
3010, 11

12x
40490, 11

3x
3895, 11

3x
41239, 11

3x
4477, 11

1x
2445, 11

2x
32018, 11

2x
6111, 11

1x
47397, 11

2x
2465, 11

2x
2730, 11

1x
3029, 11

2x
4282, 11

1x
6112, 11

5x
3703, 11

3x
10928, 85

20x
32013, 85

10x
6632, 85

20x
90258, 85

2x
87083, 85

3x
3648, 85

2x
62519, 86

2x
4265c, 86

15x
3713, 86

4x
62520, 86

2x
3673, 86

5x
44809, 86

13x
4519, 86

5x
6553, 86

20x
44294, 86

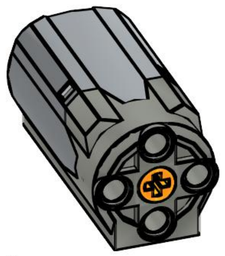
1x
58120c01, 86

5x
24316, 88

1x
3070b, 3

2x
3023, 3

6x
3069b, 3

1x
32039, 3

8x
15068, 3

1x
4519, 3

10x
63864, 3

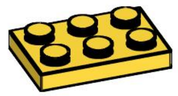
2x
3021, 3

4x
2431, 3

2x
3710, 3

1x
32073, 3

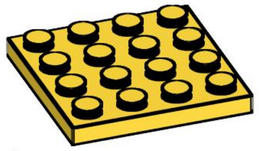
1x
3031, 3

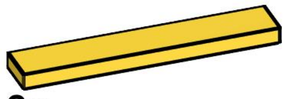
2x
6636, 3

1x
3795, 3

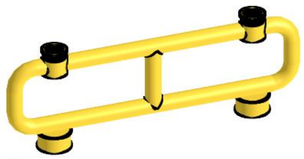
2x
2486, 3

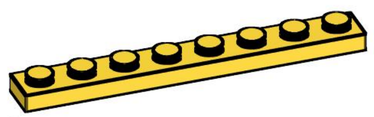
2x
3460, 3