16 X 16 STEPPER

Designed by
Ryk Field
2018

REF03

This "16x16 Stepper" GBC was built as a contribution toward the greatballpit.com Community Module Challenge in 2018.

The visual design is heavily influenced by the 2015 stackable Brickworld Chicago module.

The steps are driven by an Akiyuki mechanism.

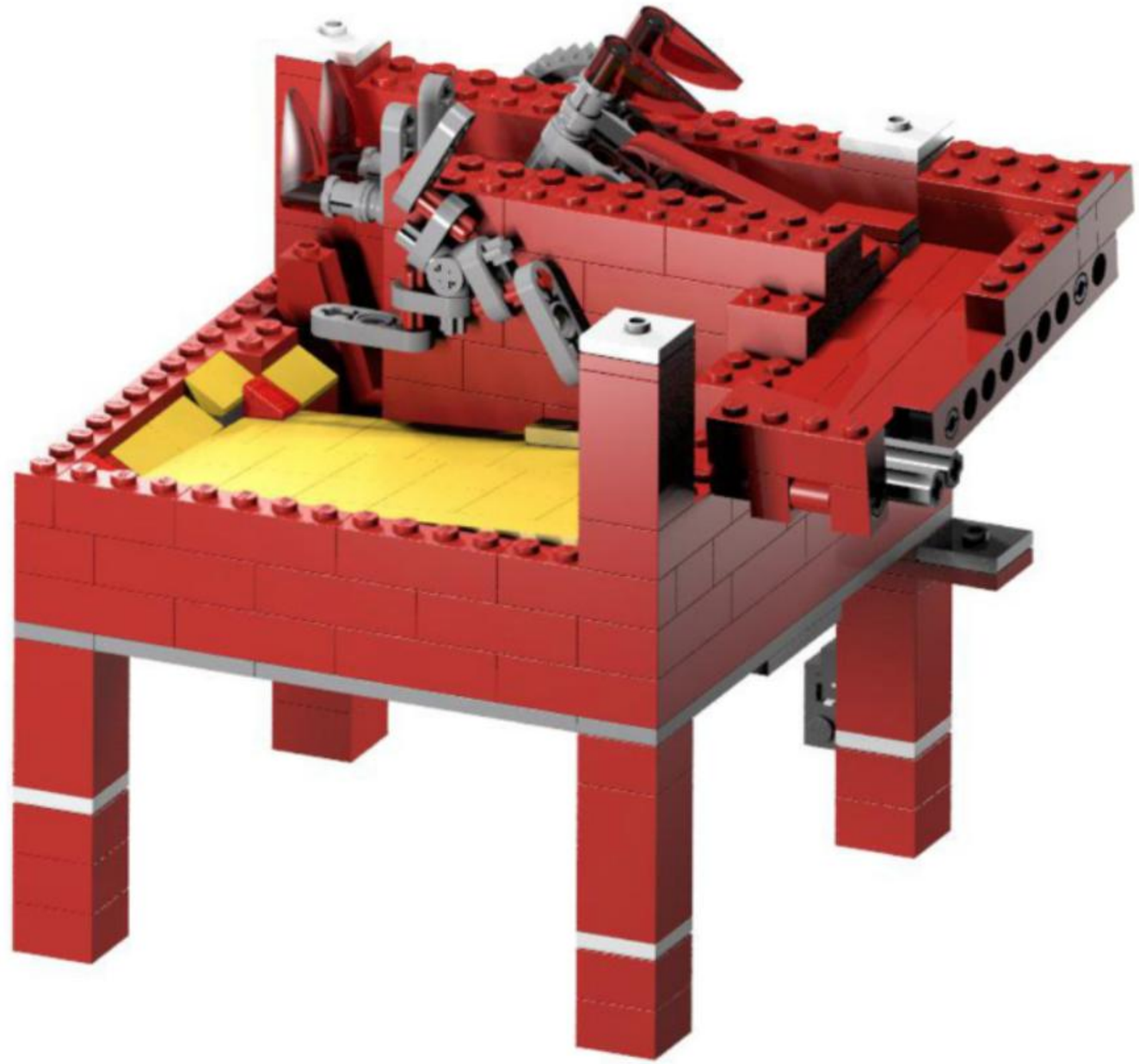

Brickworld Chicago 2015 module by Bryan Bonahoom

1

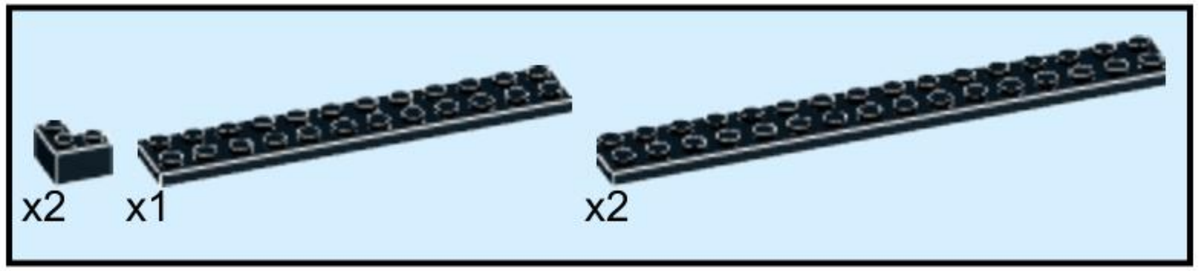

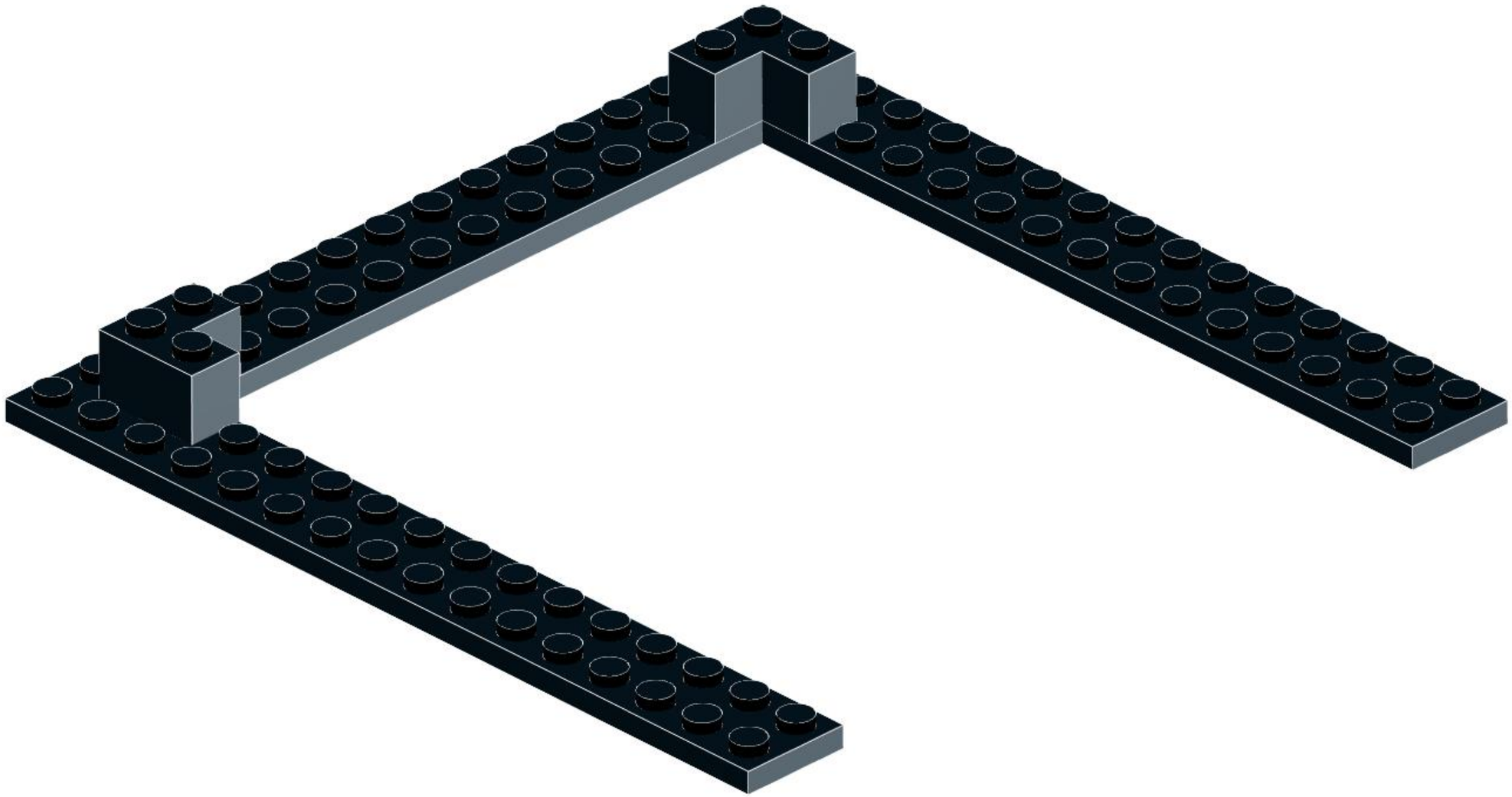

2

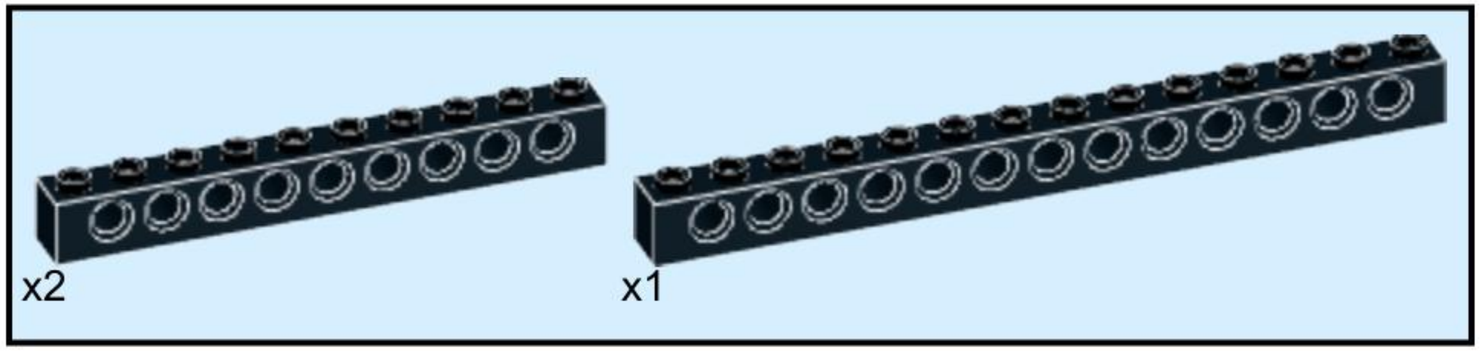

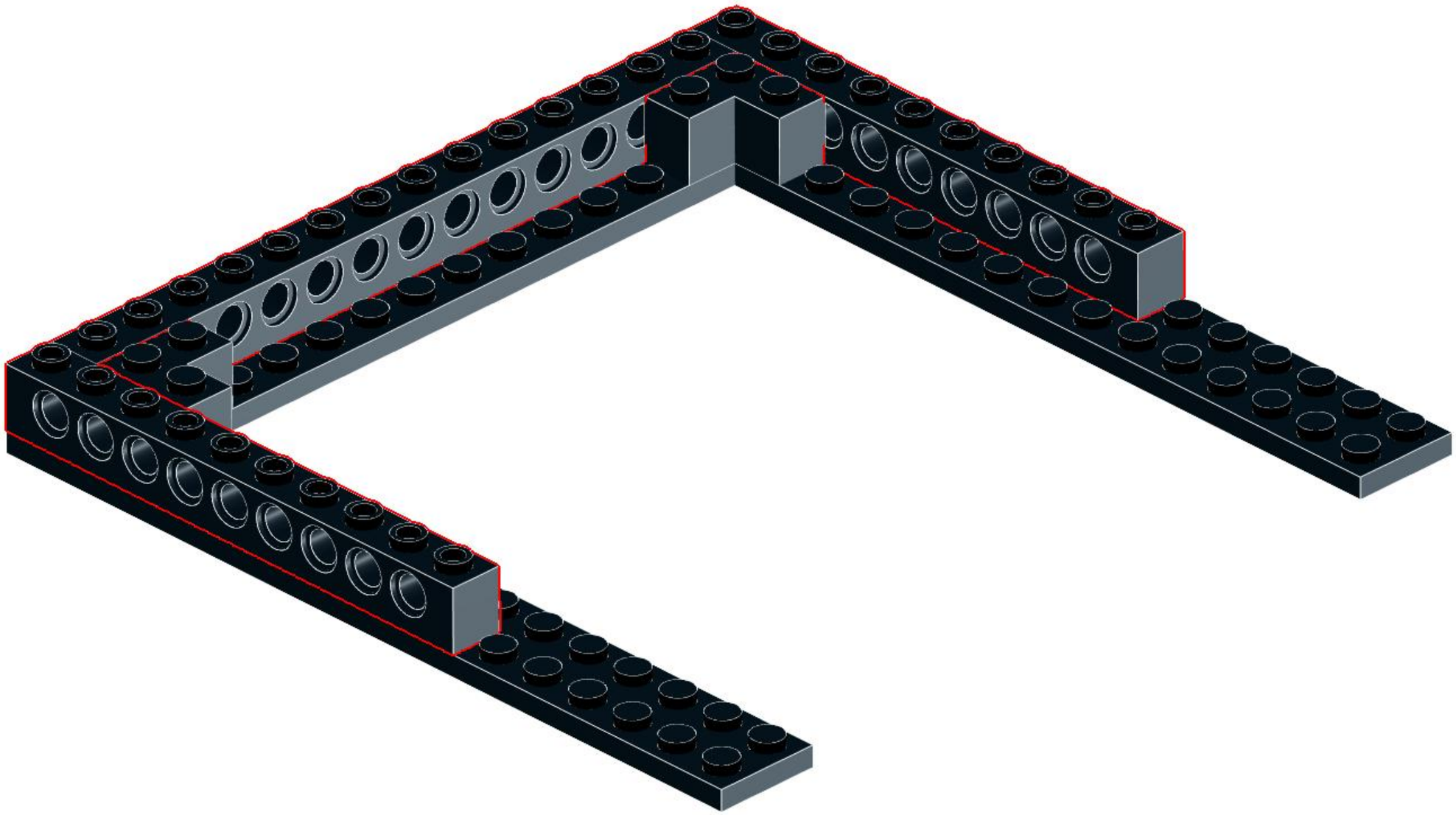

3

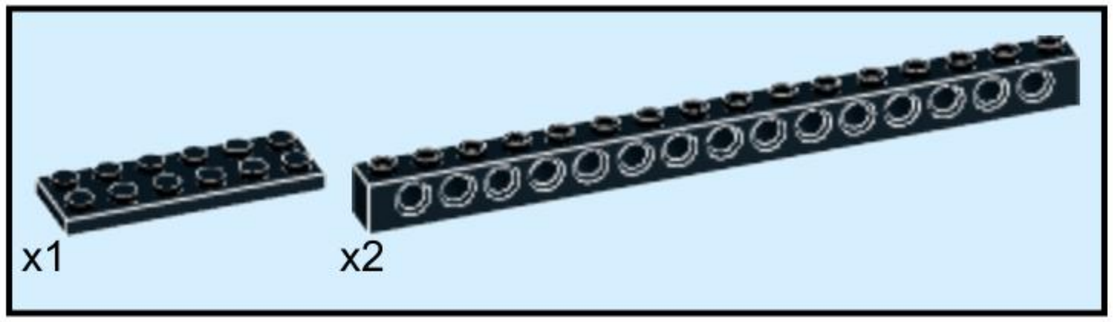

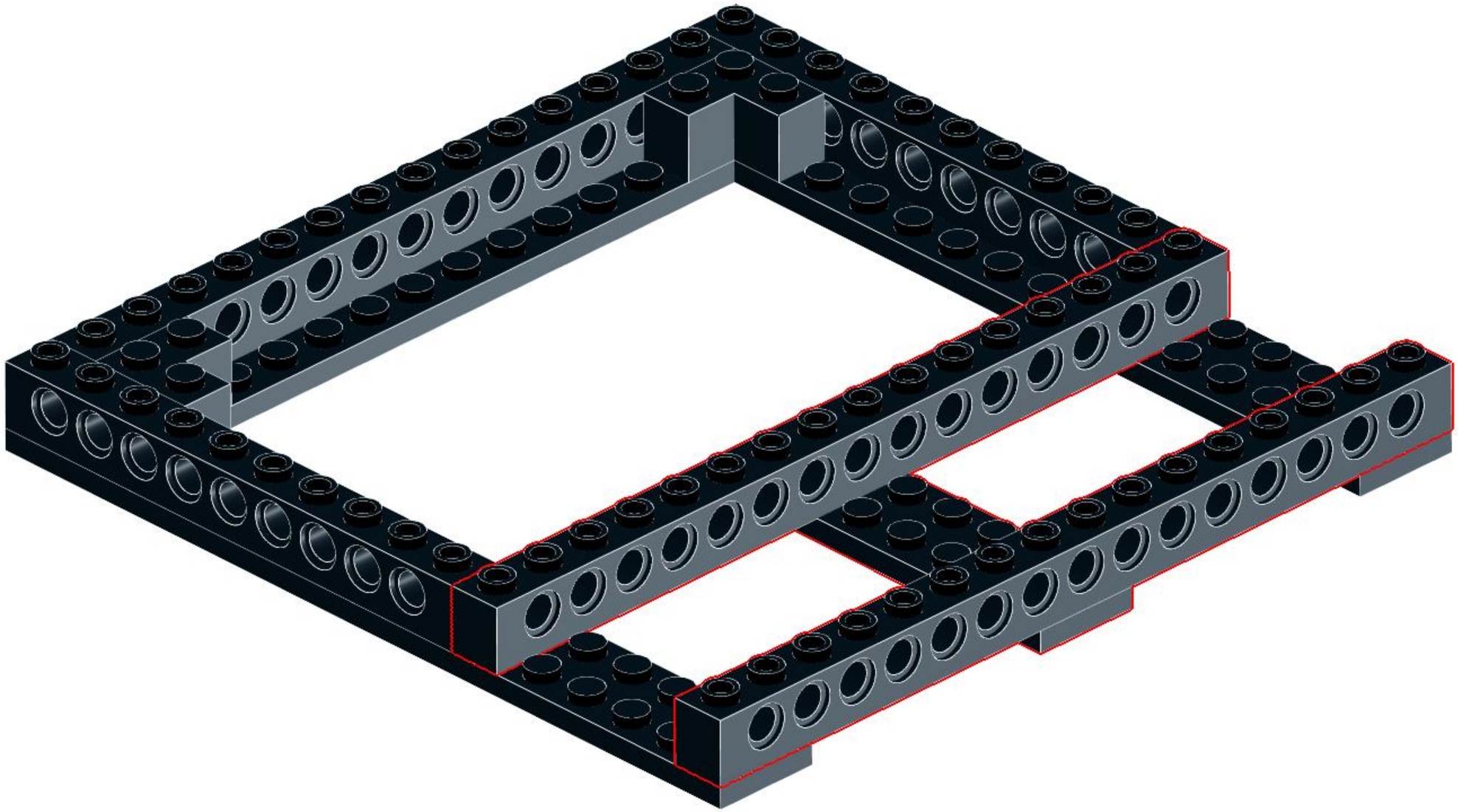

4

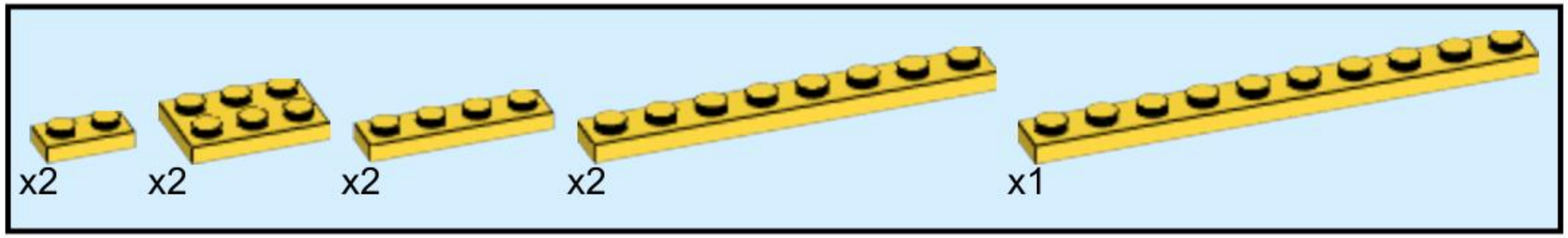

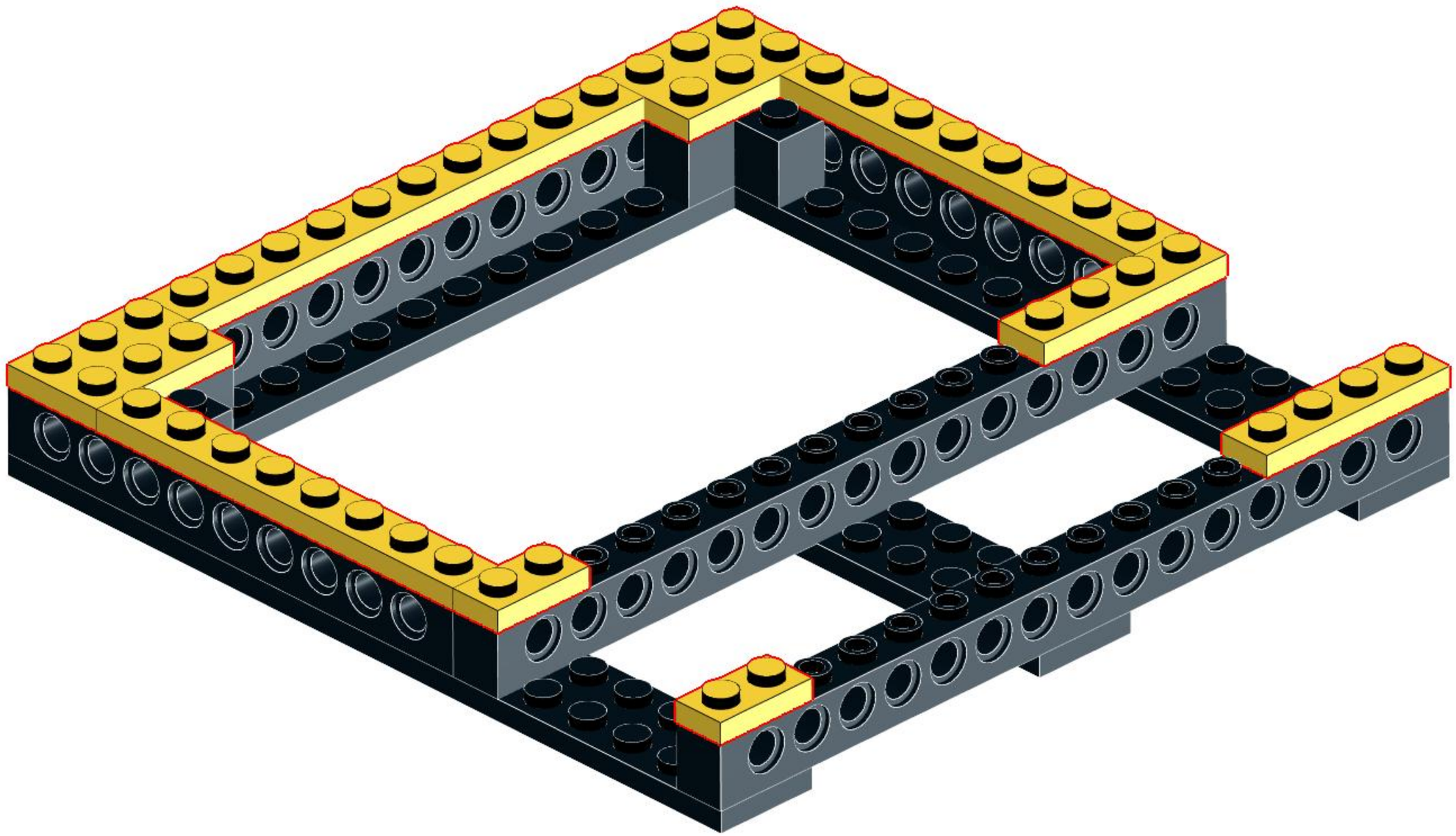

5

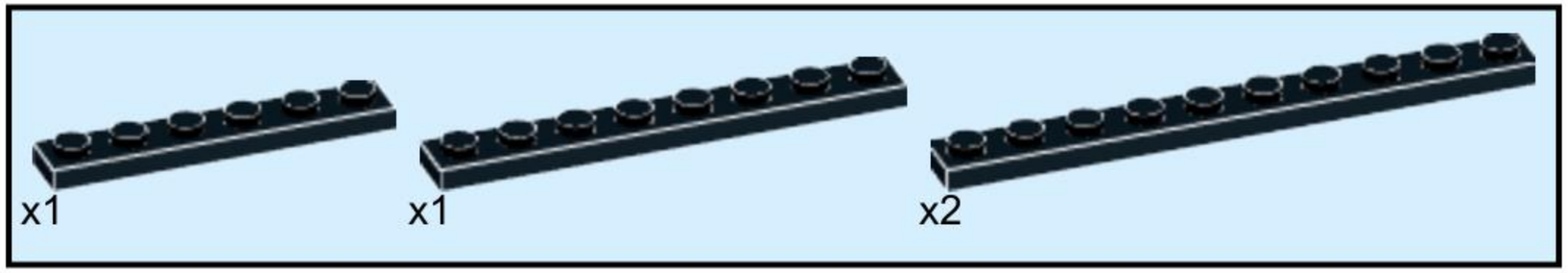

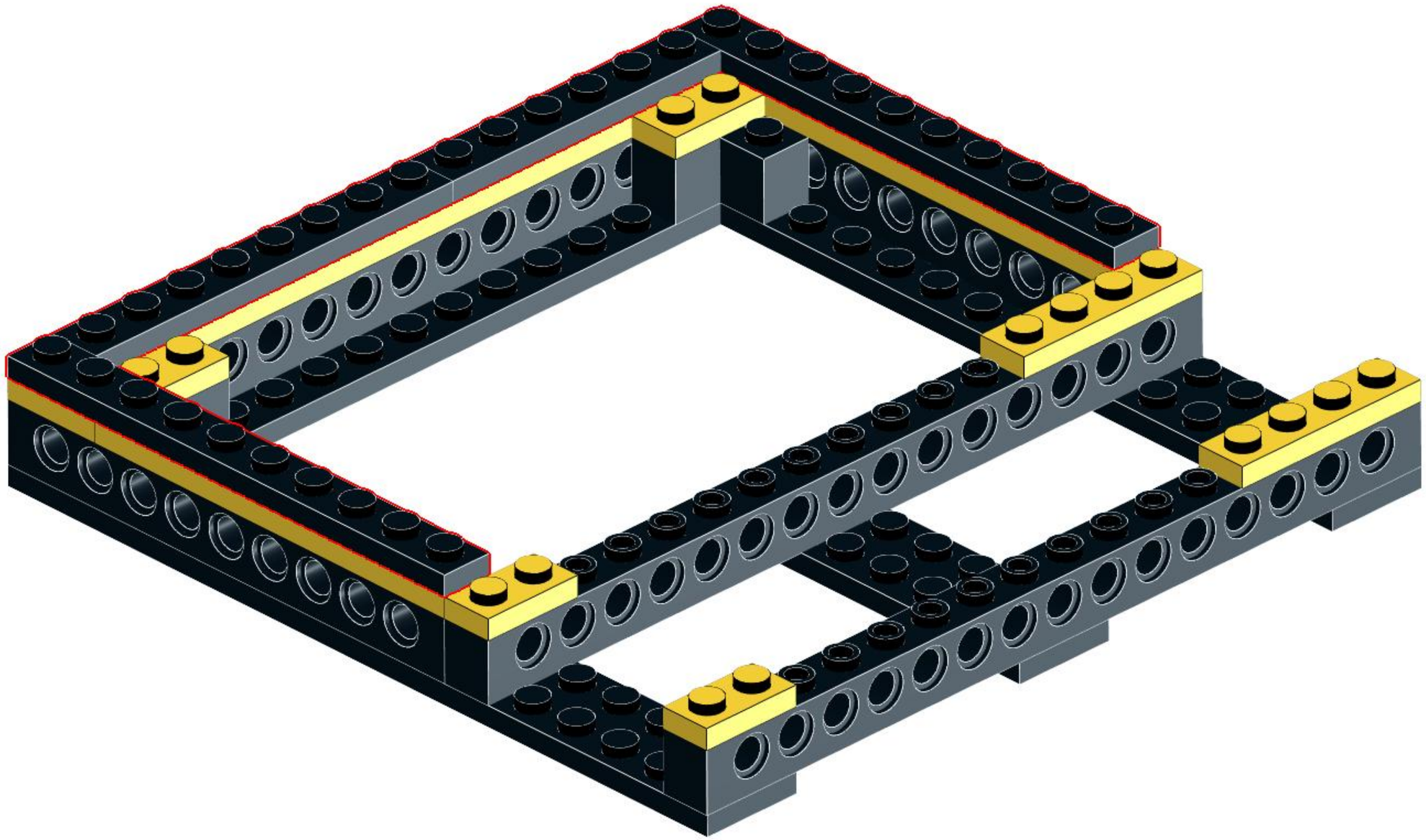

6

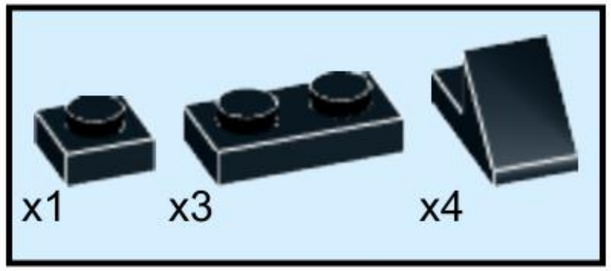

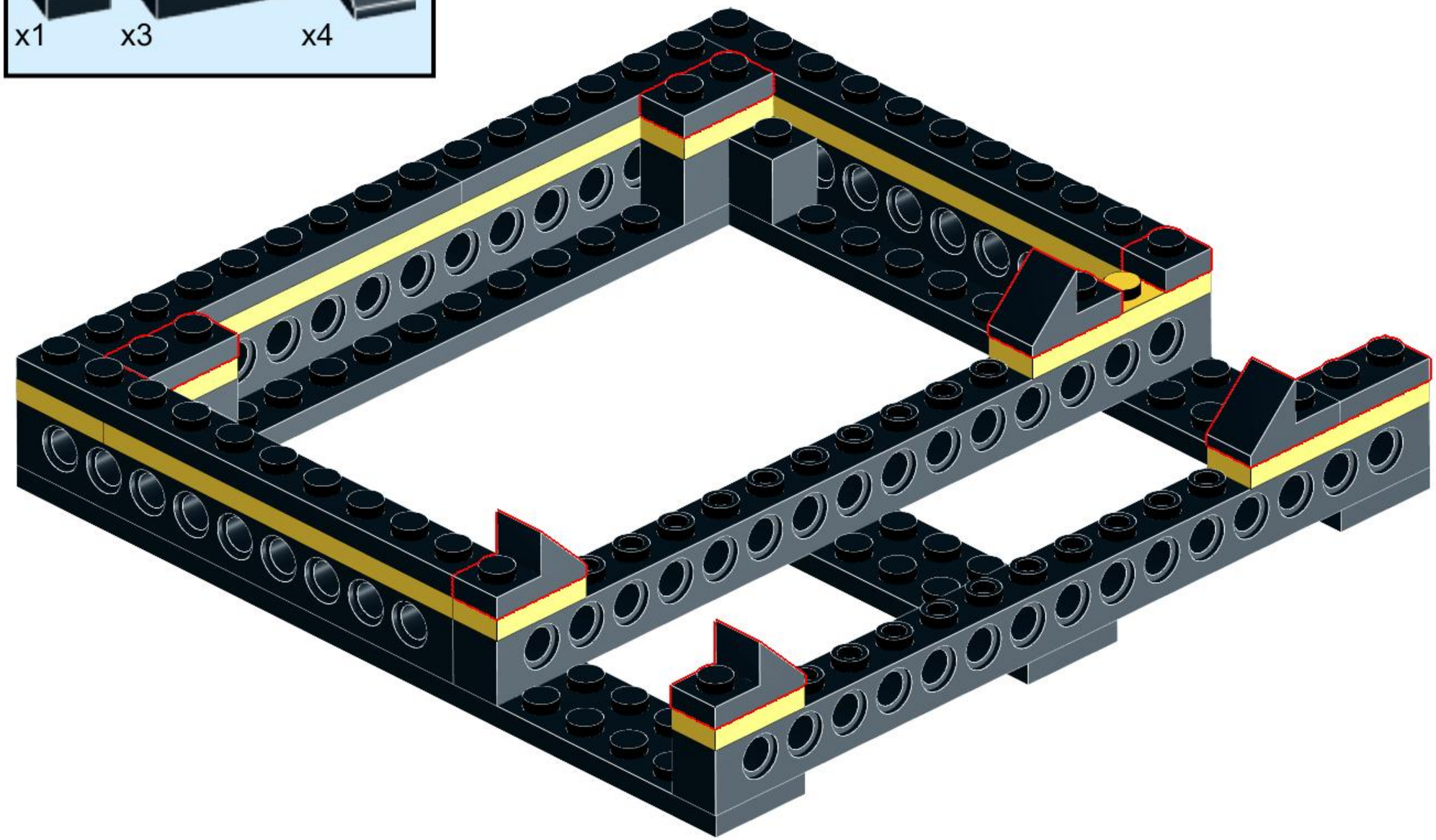

7

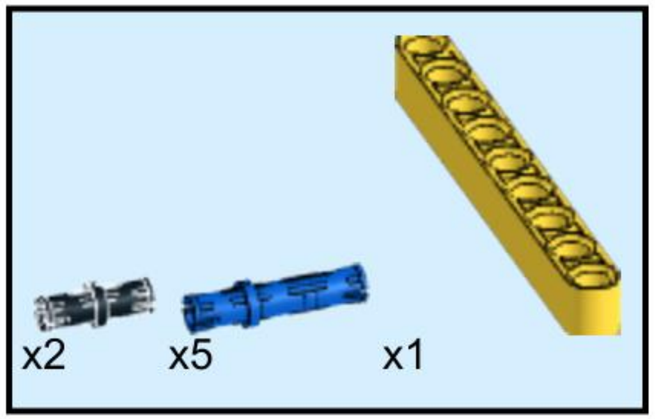

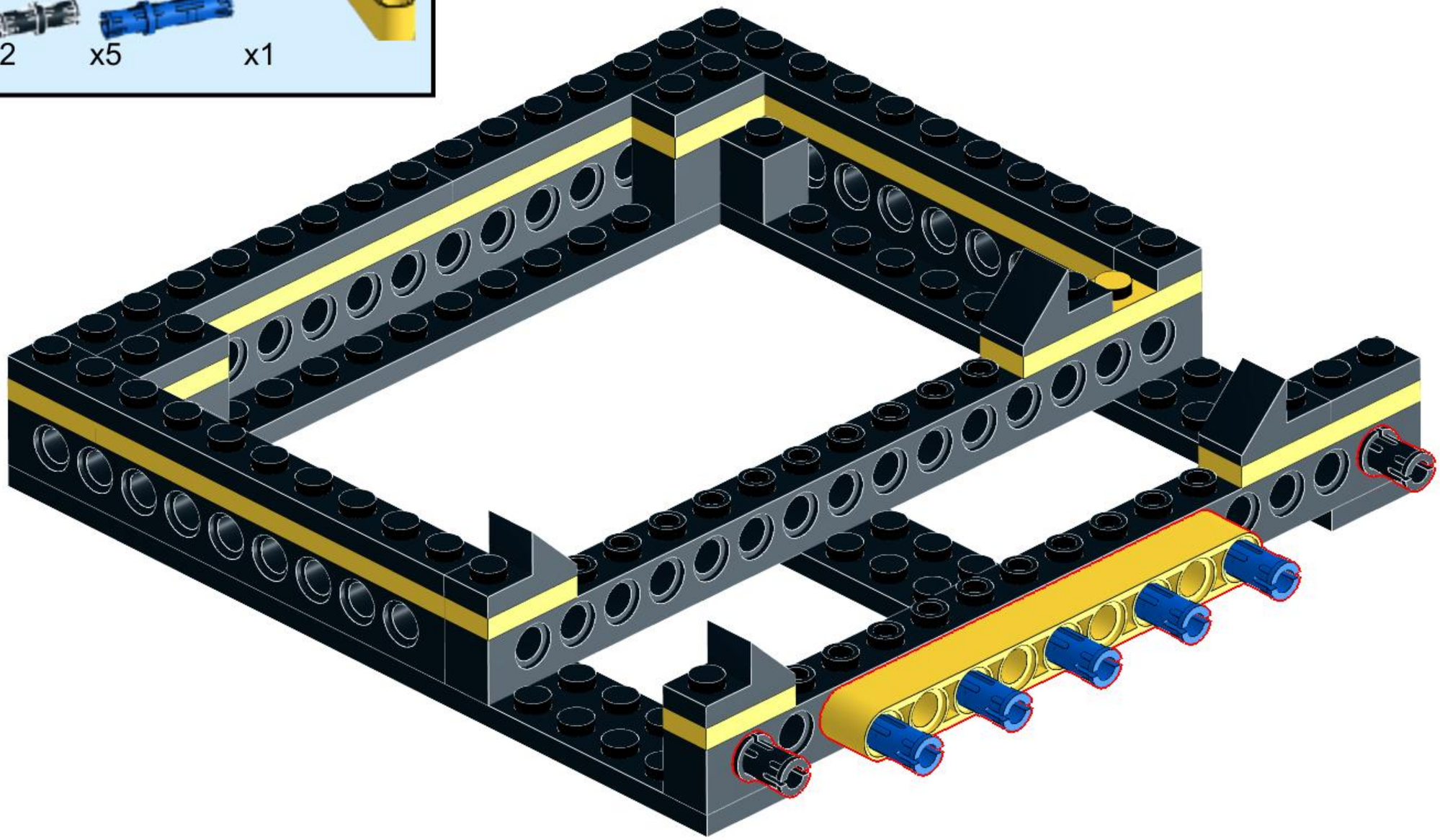

8

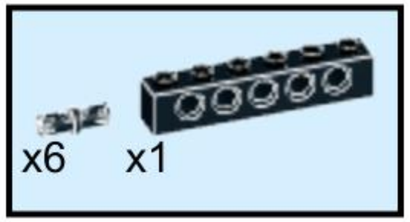

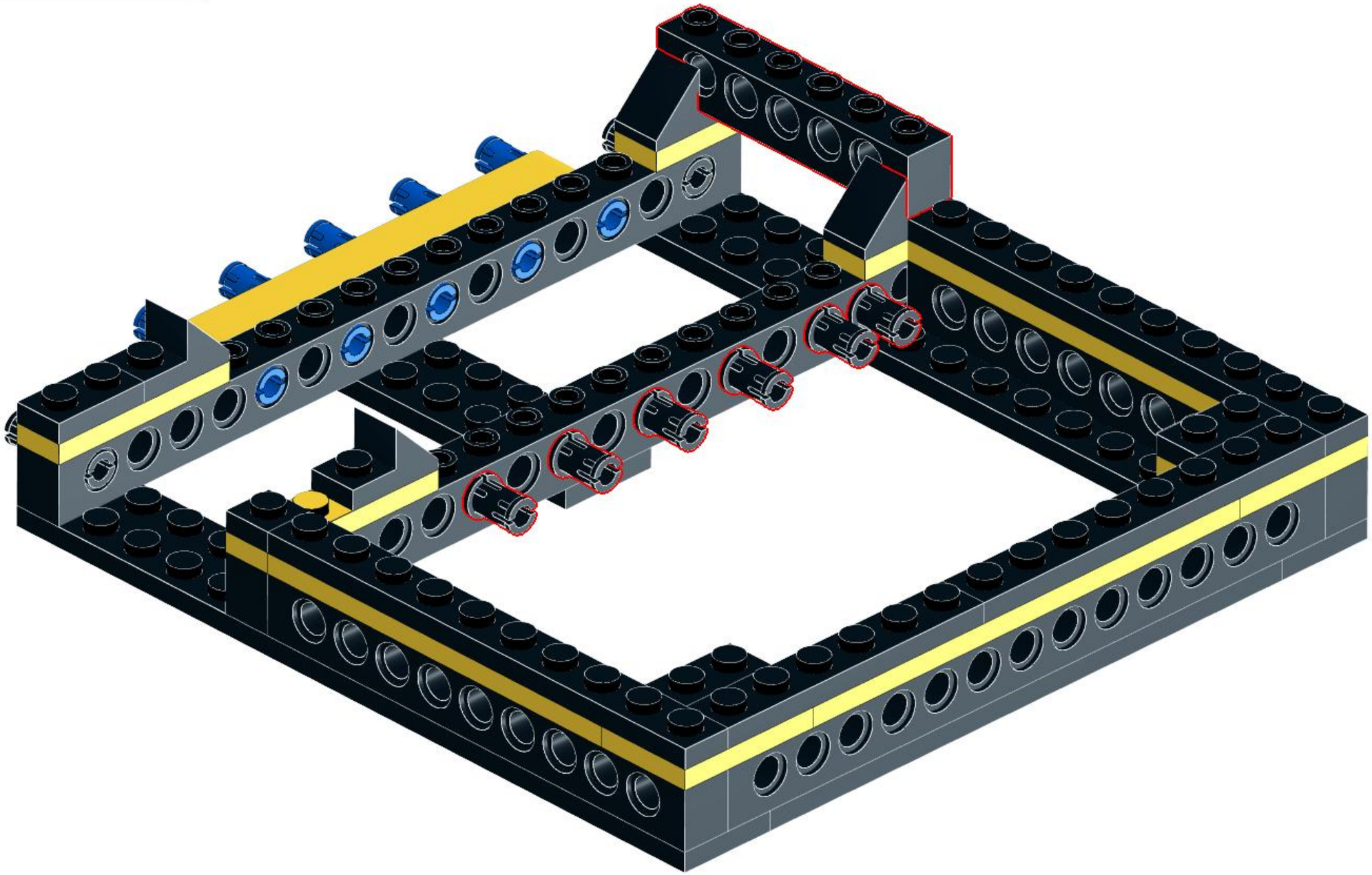

9

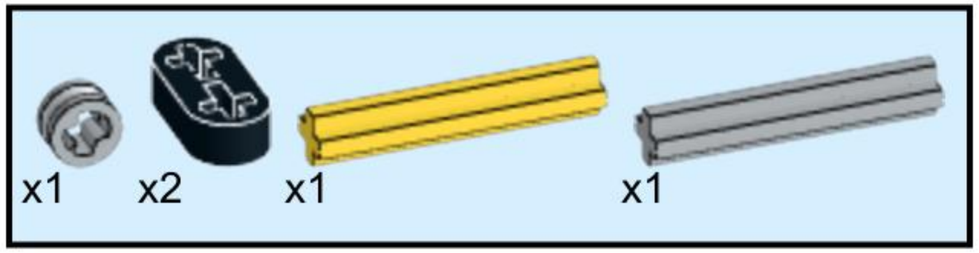

All axles in this assembly are 3L, except the final yellow axle, which is 5L.

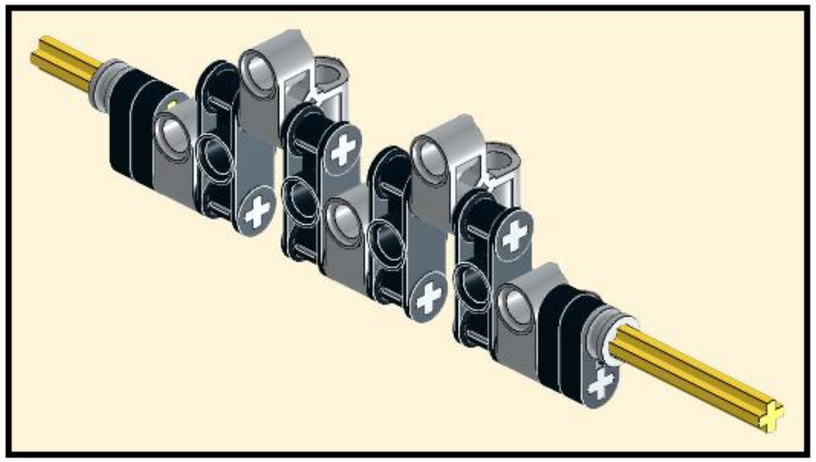

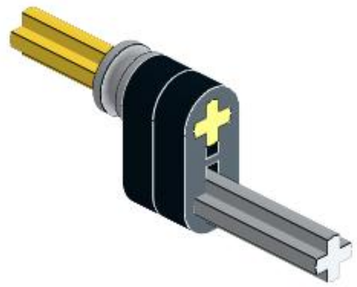

10

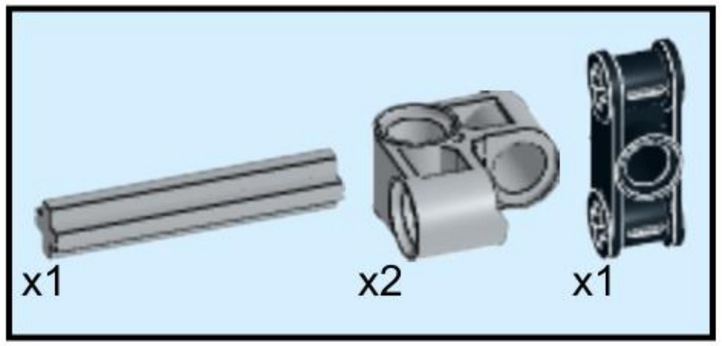

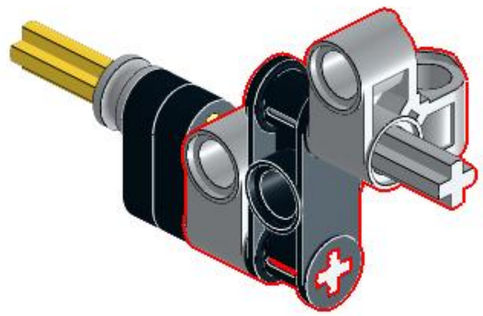

11

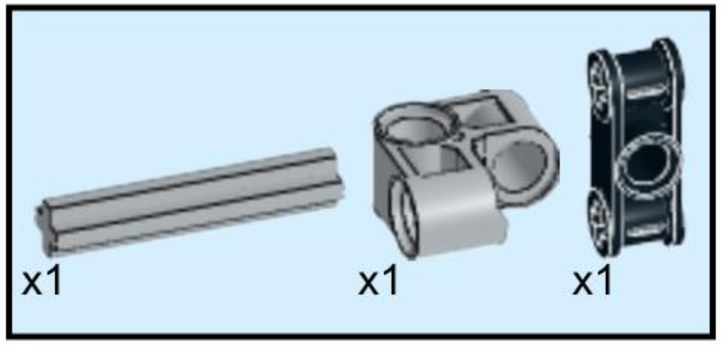

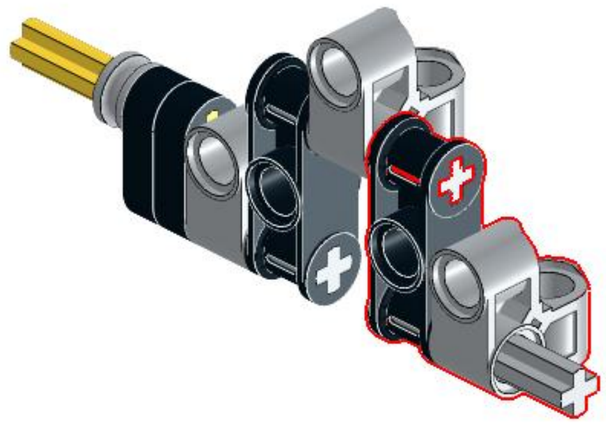

12

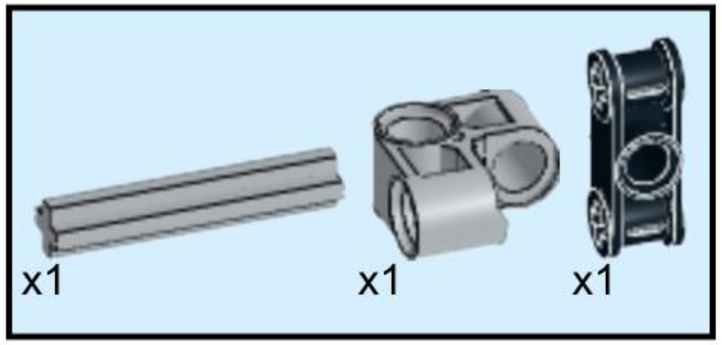

13

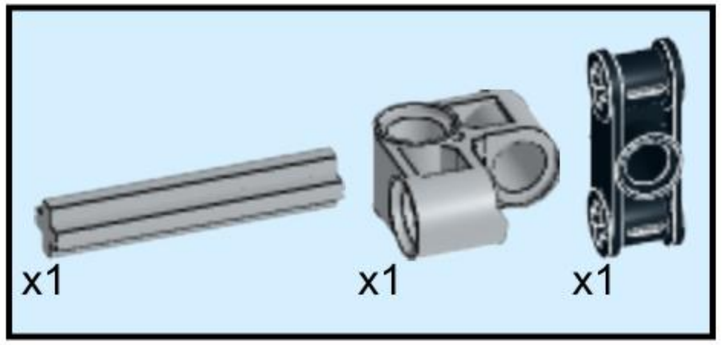

14

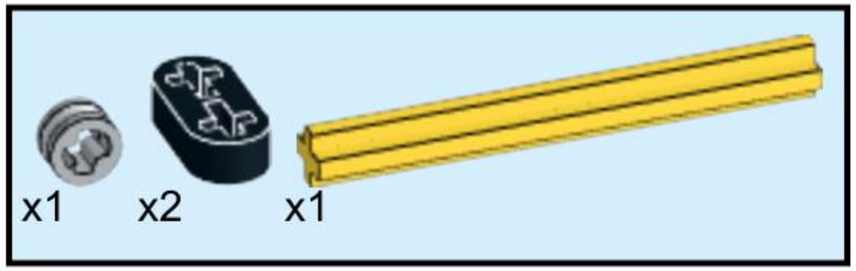

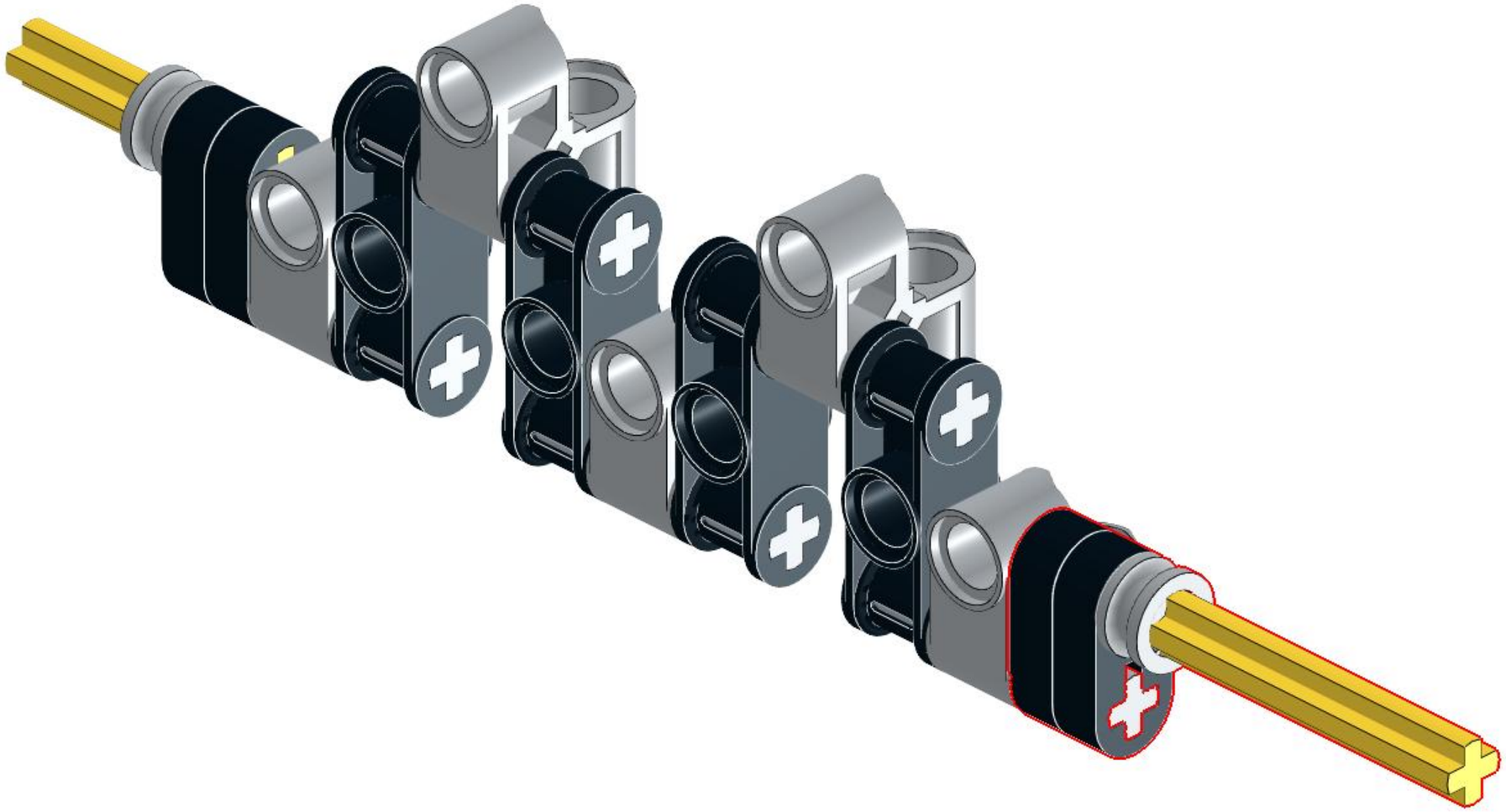

15

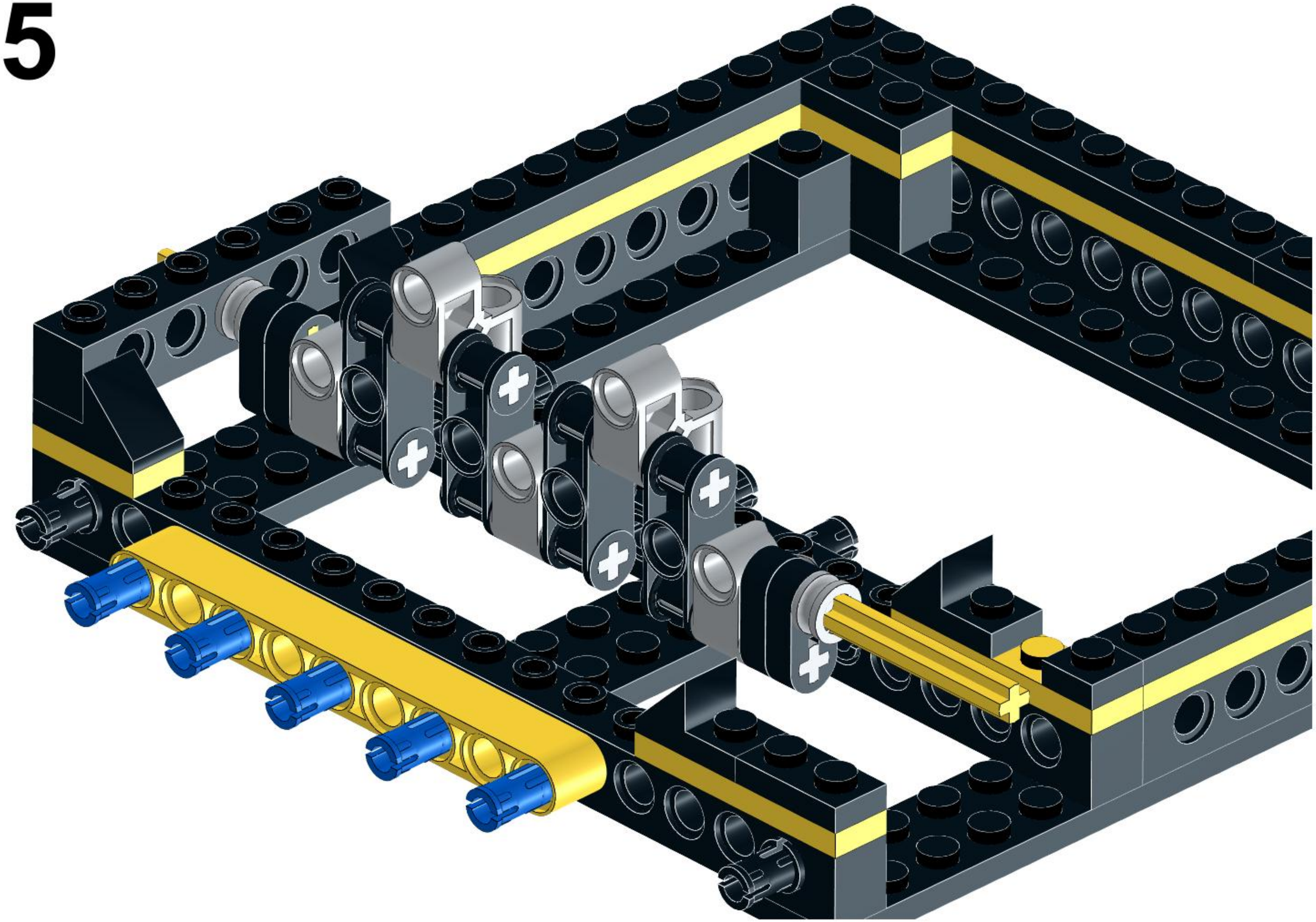

16

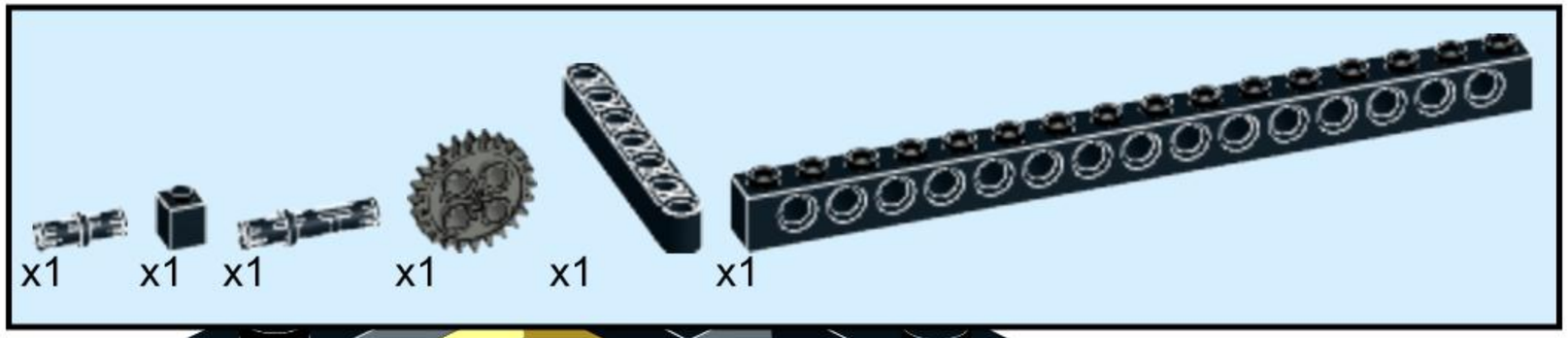

17

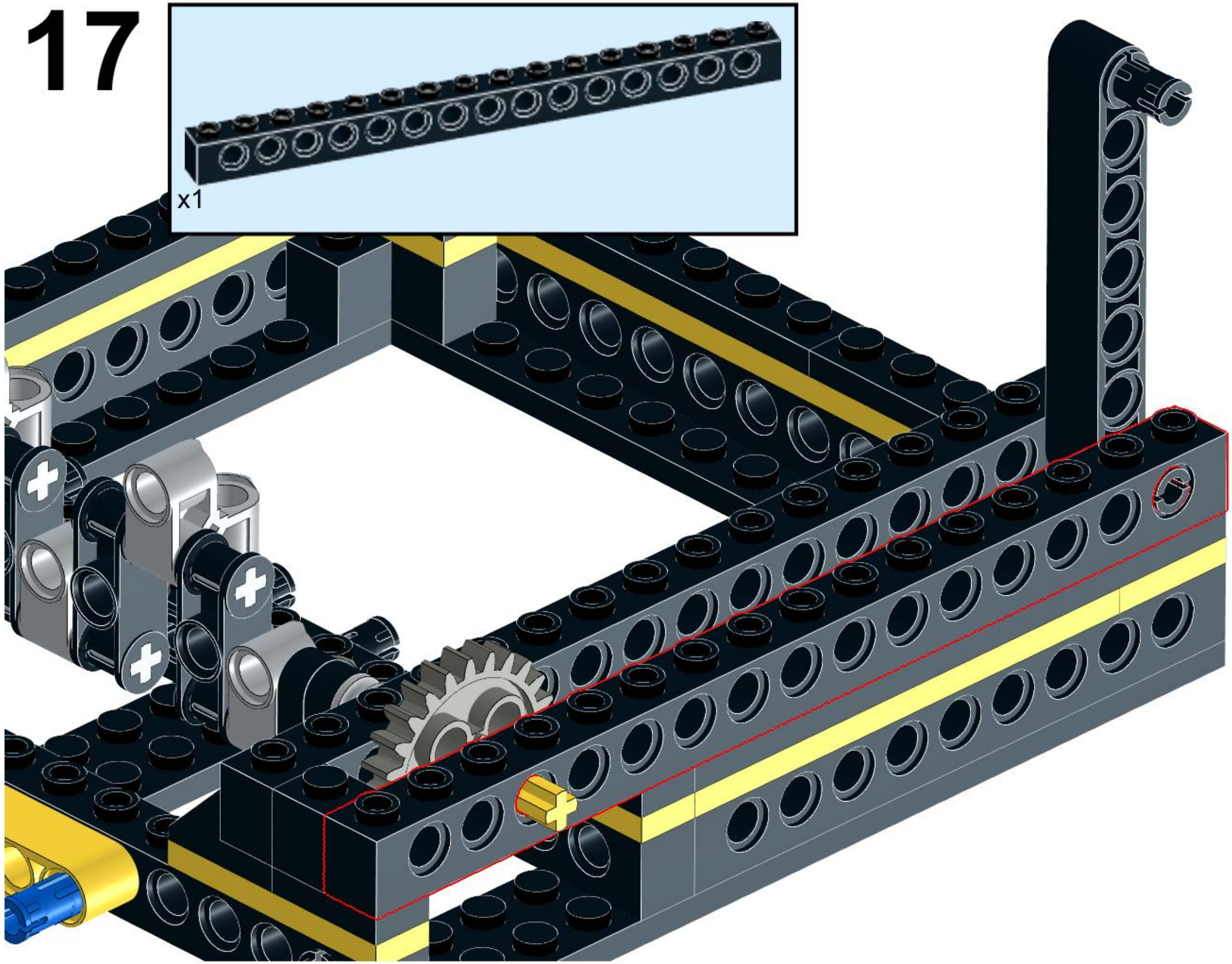

18

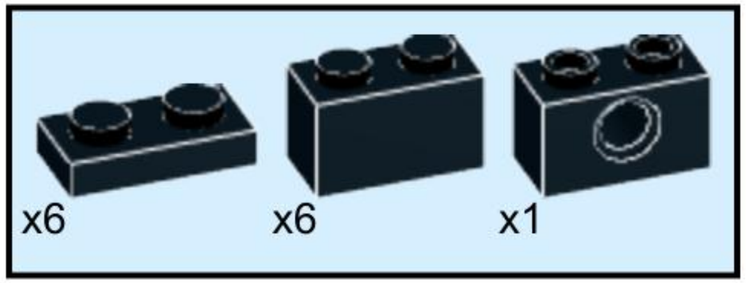

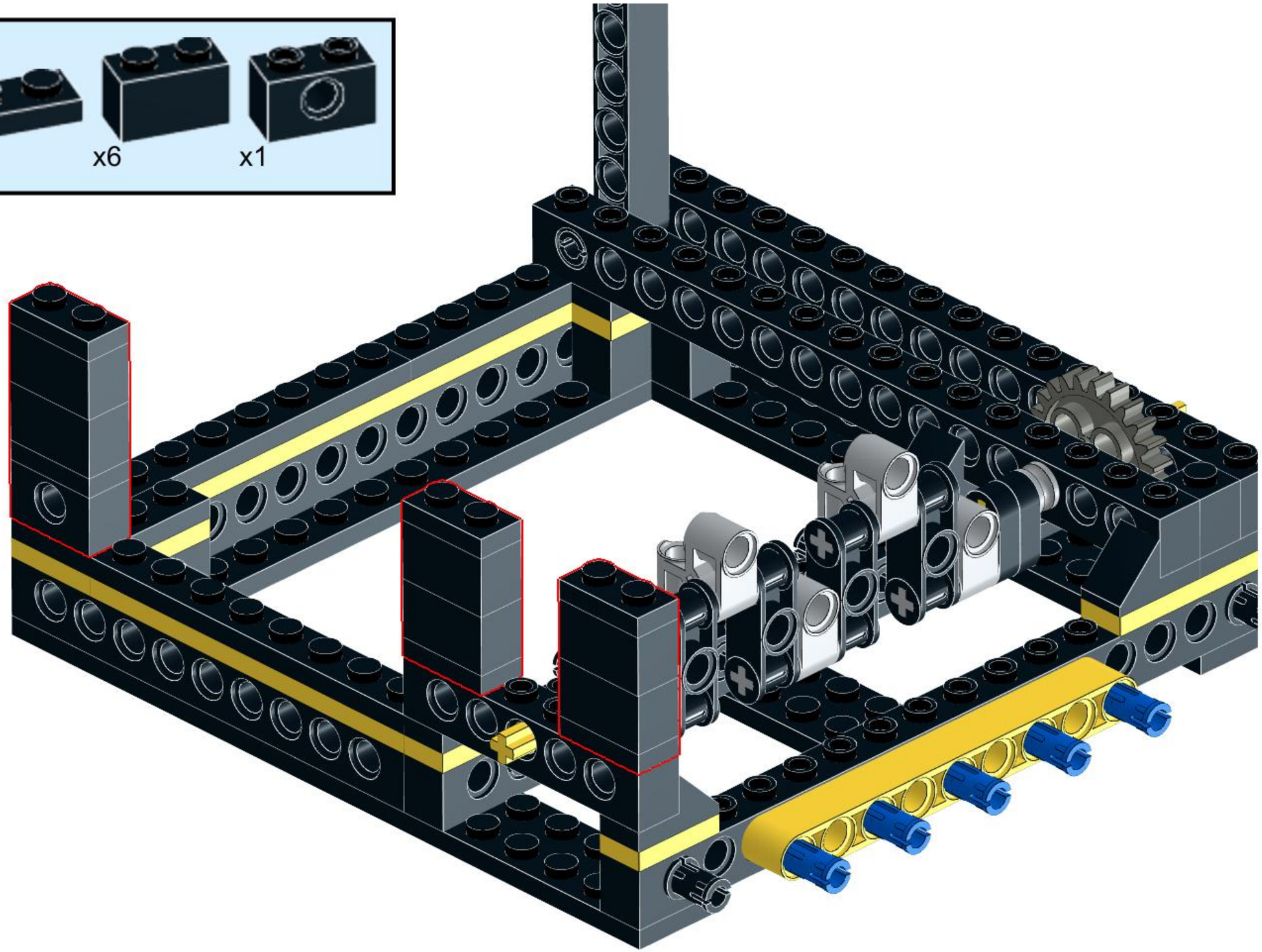

19

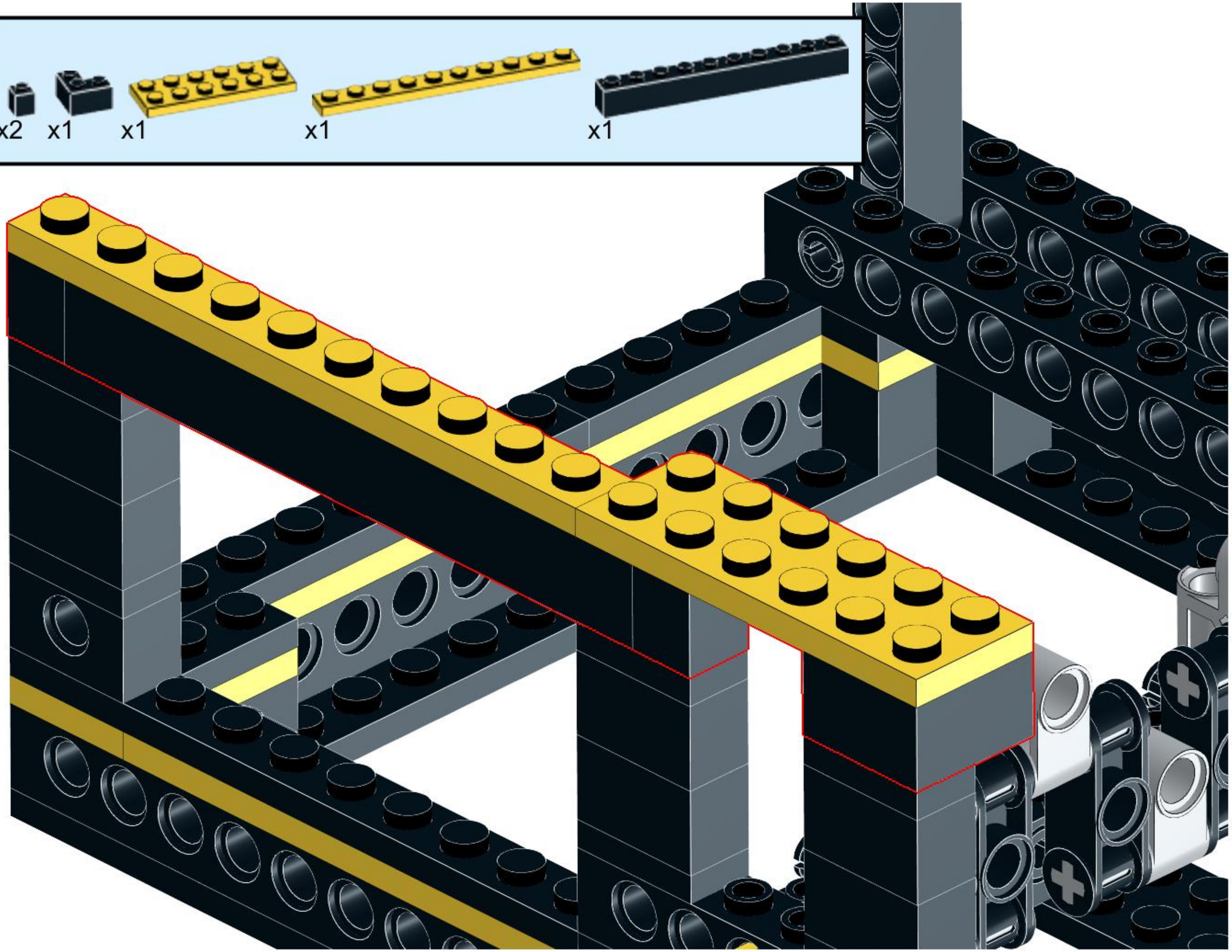

20

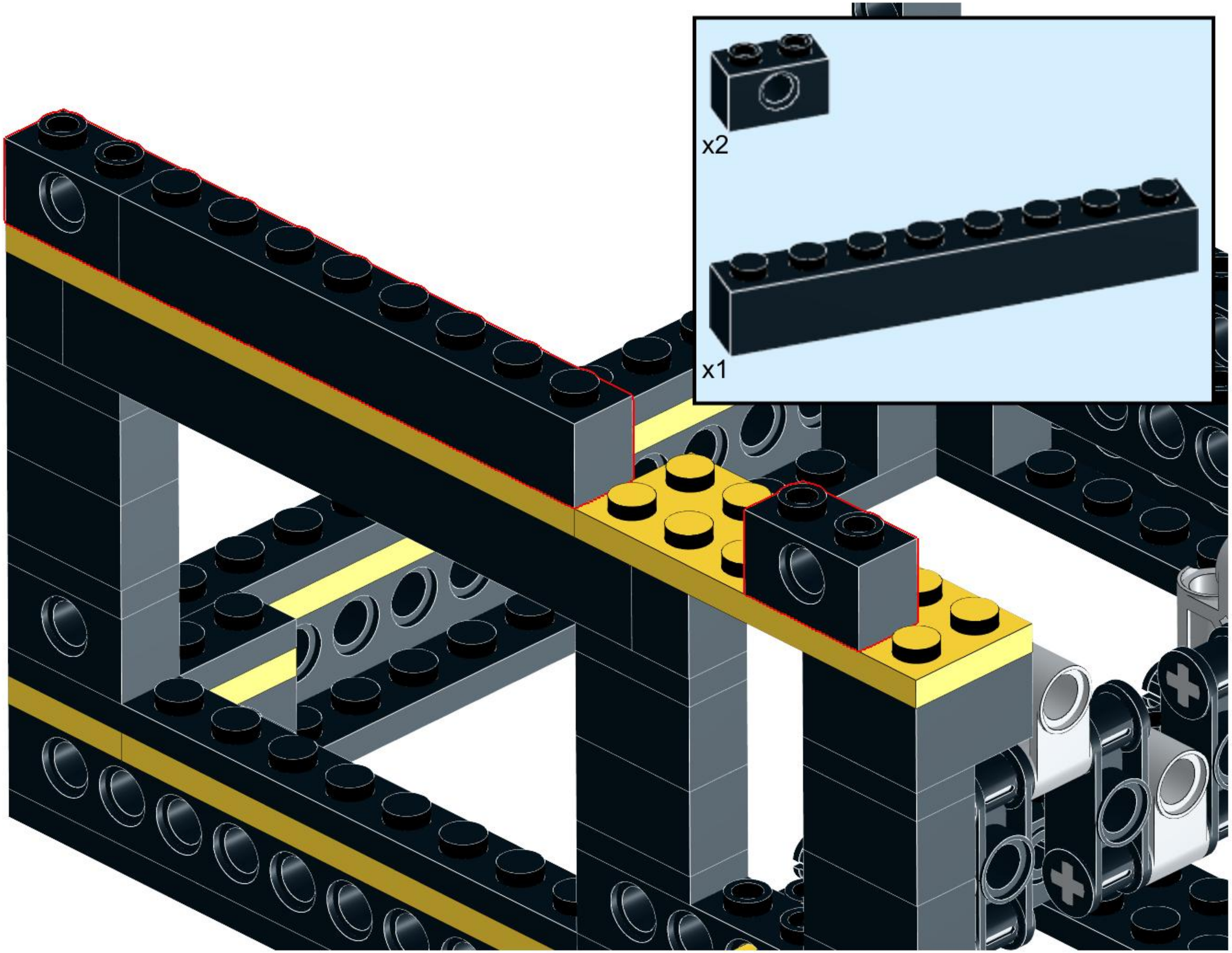

21

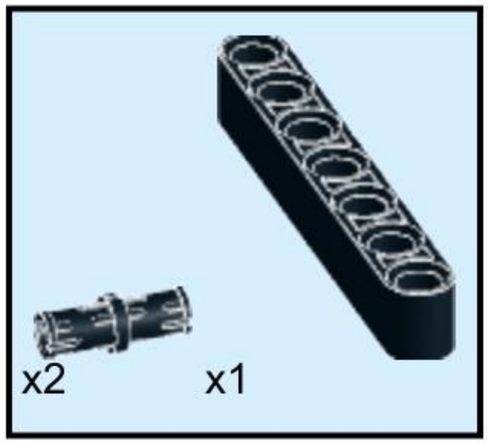

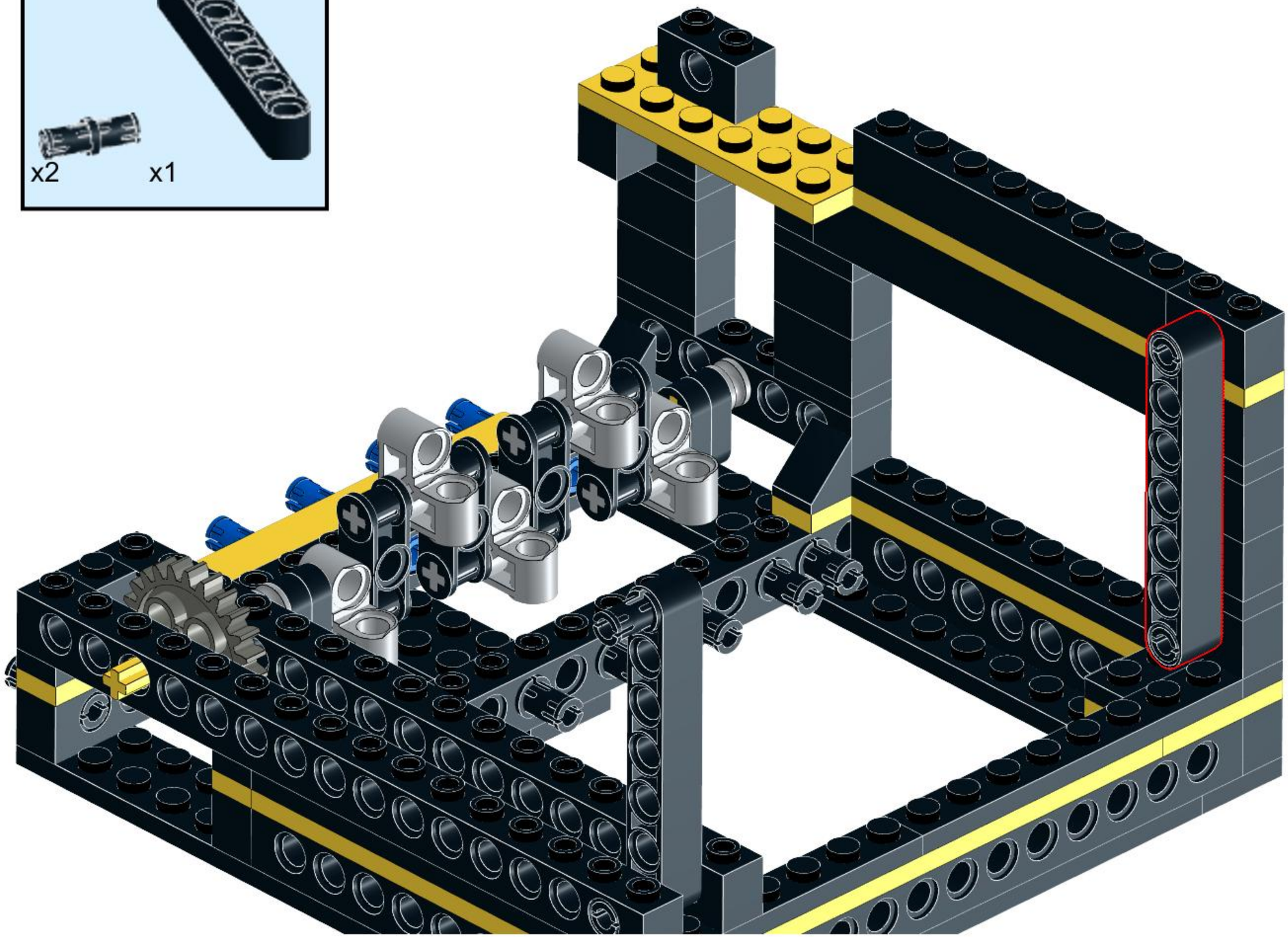

22

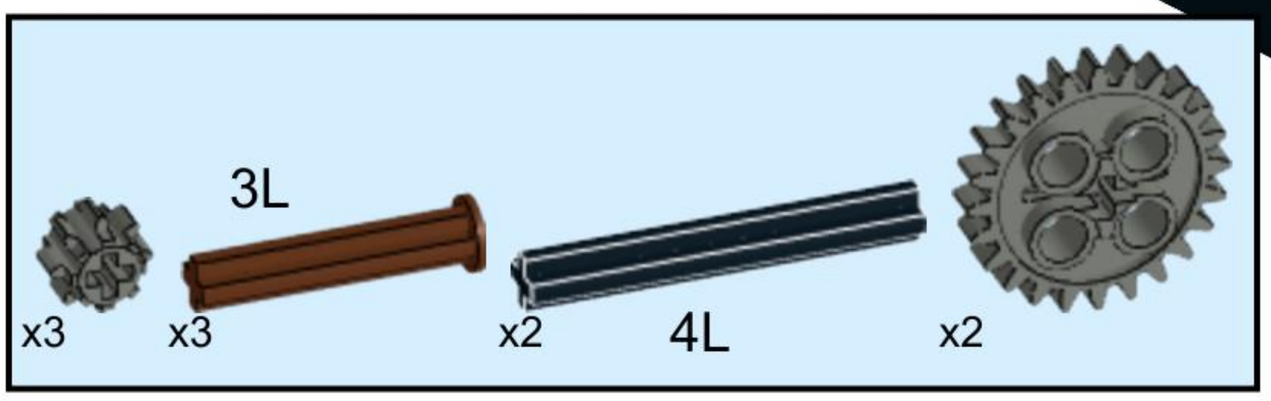

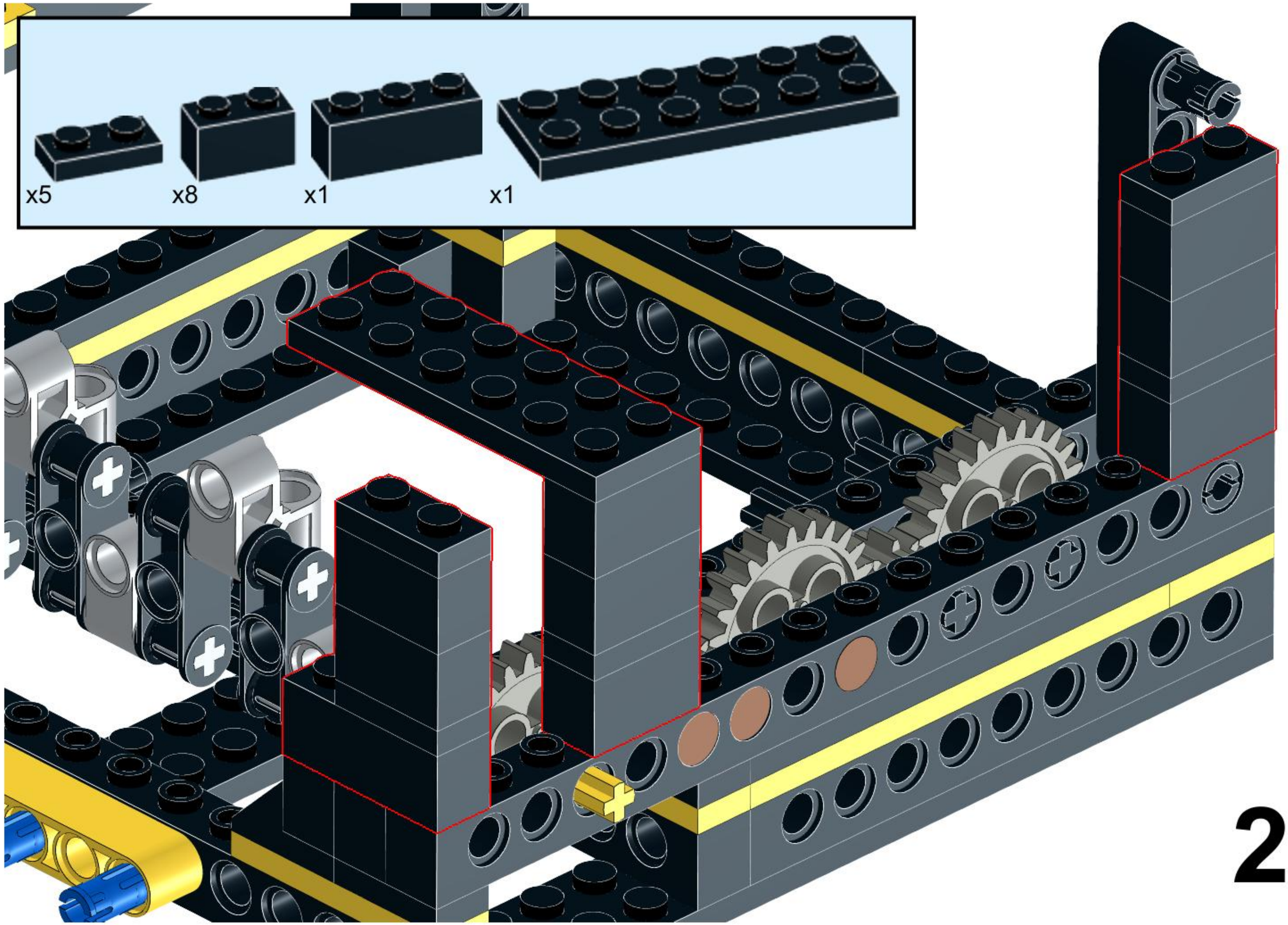
x5
x8
x1
x1

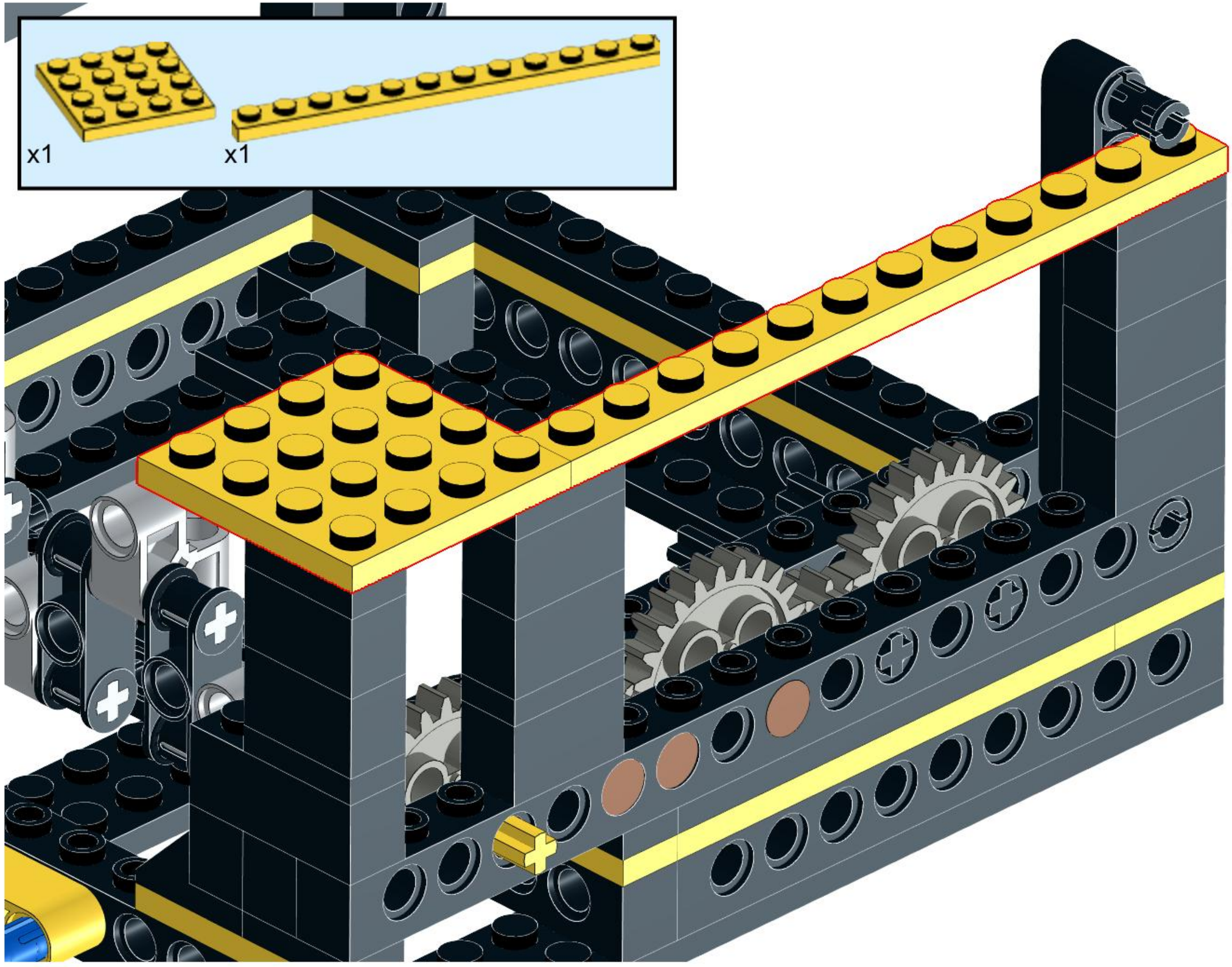
x1
x1

25

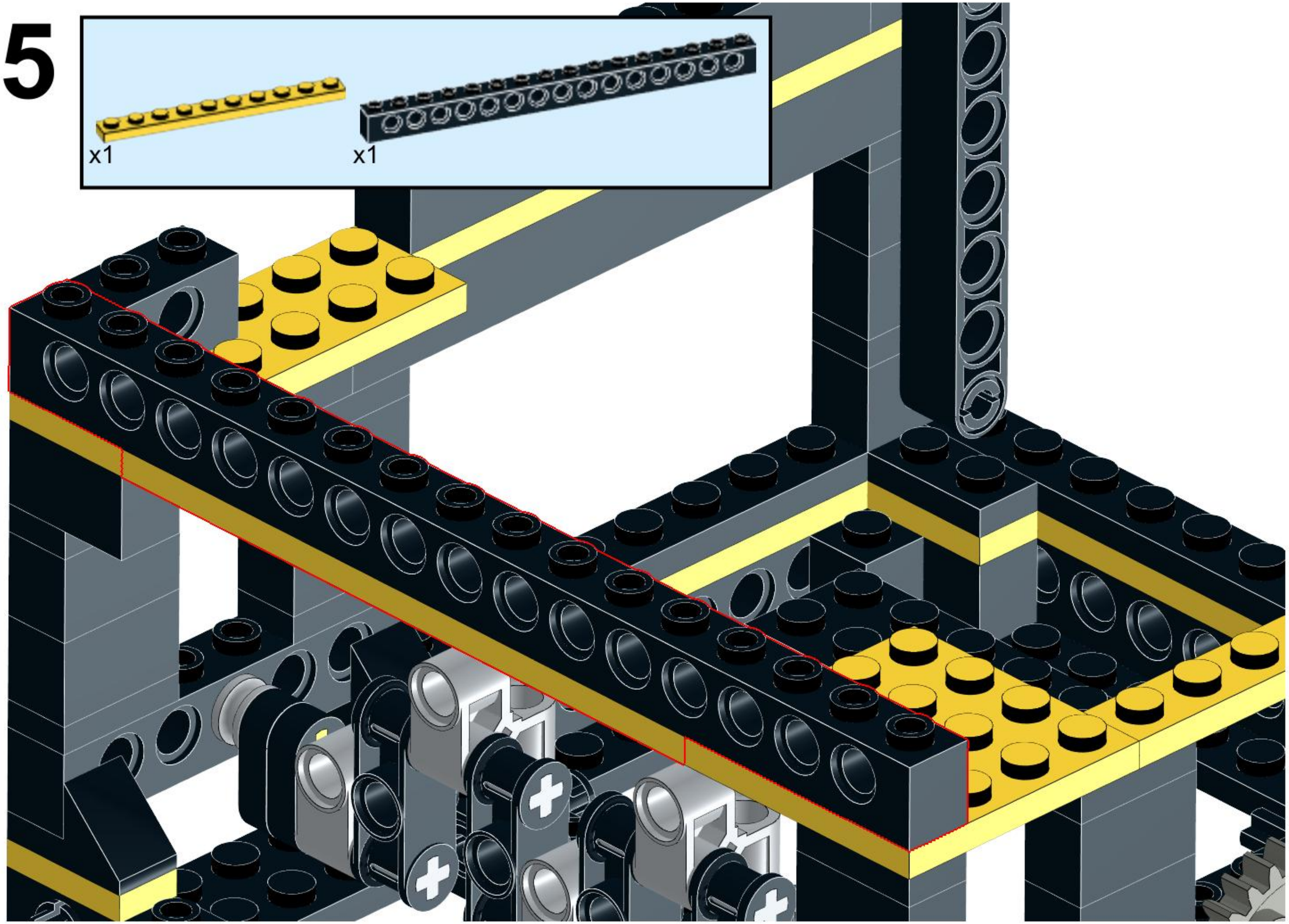

26

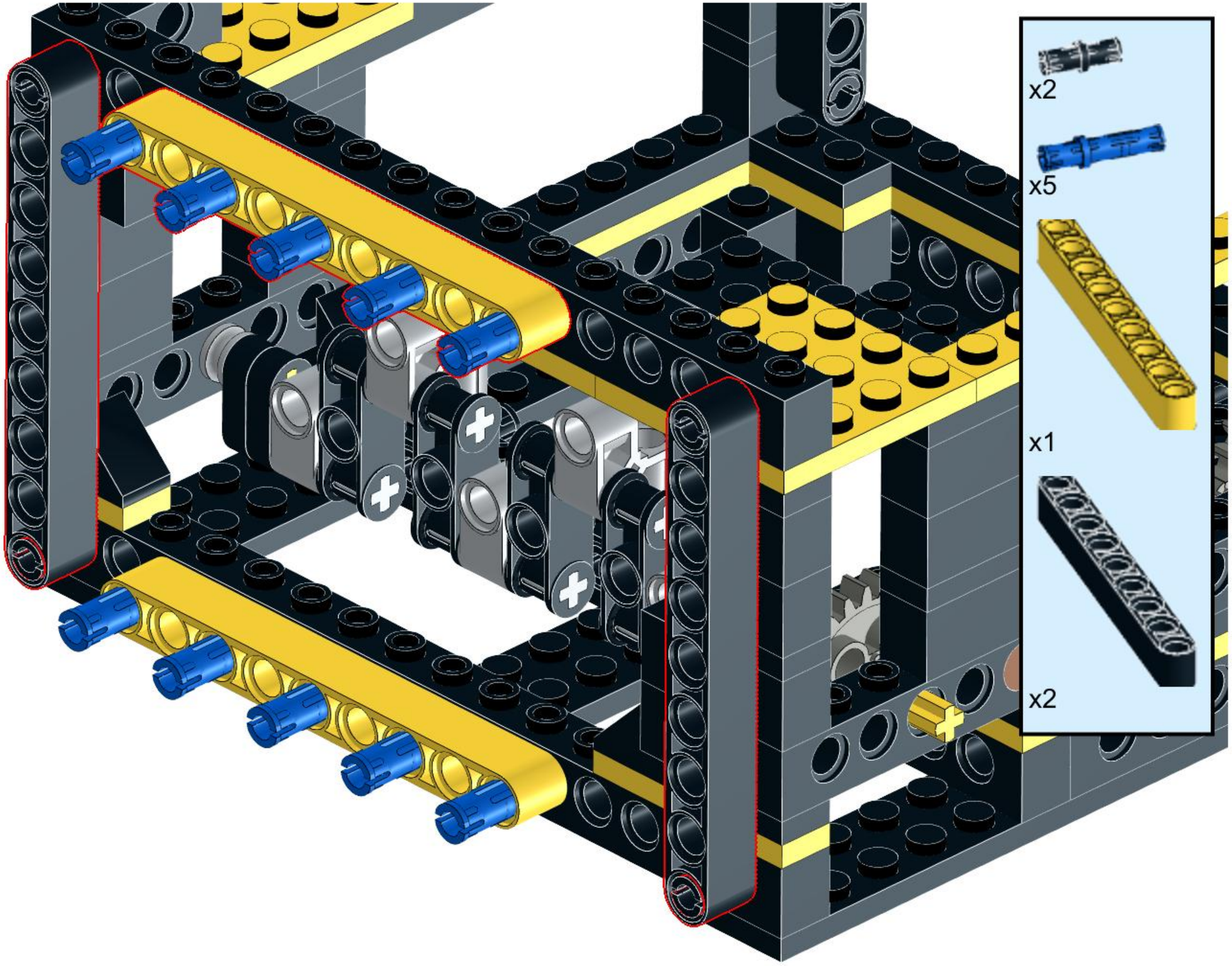

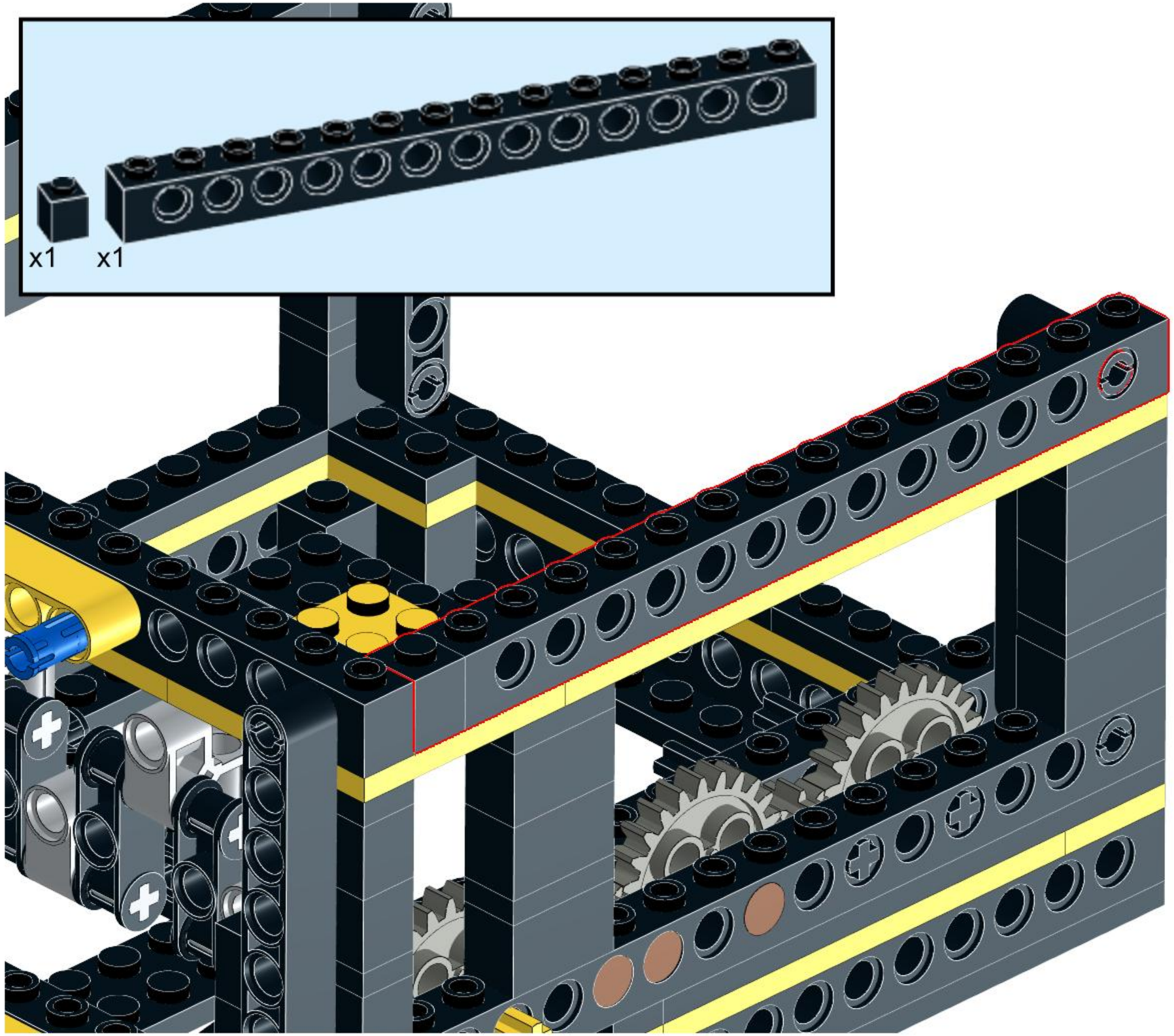
x1
x1

28

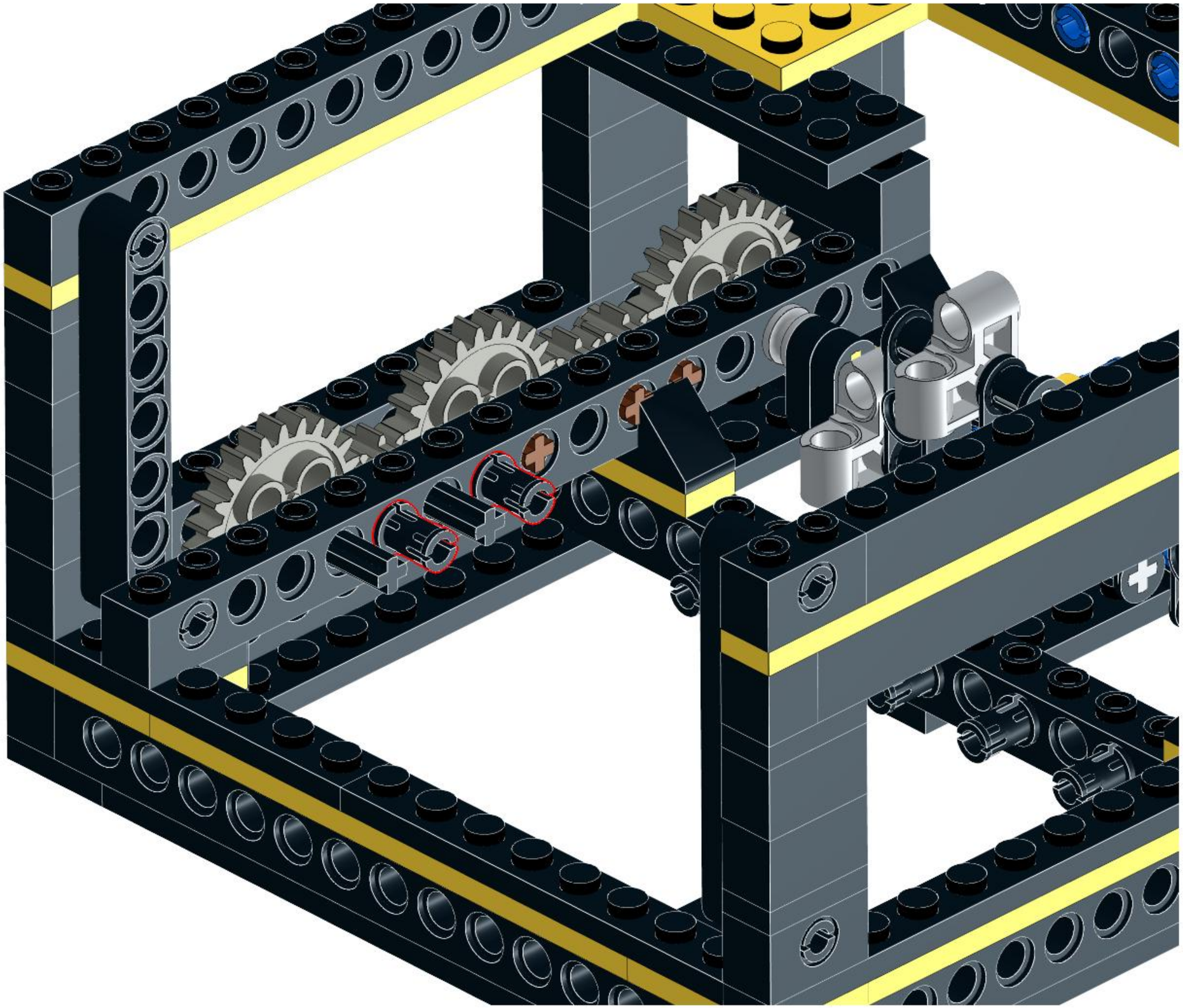

29

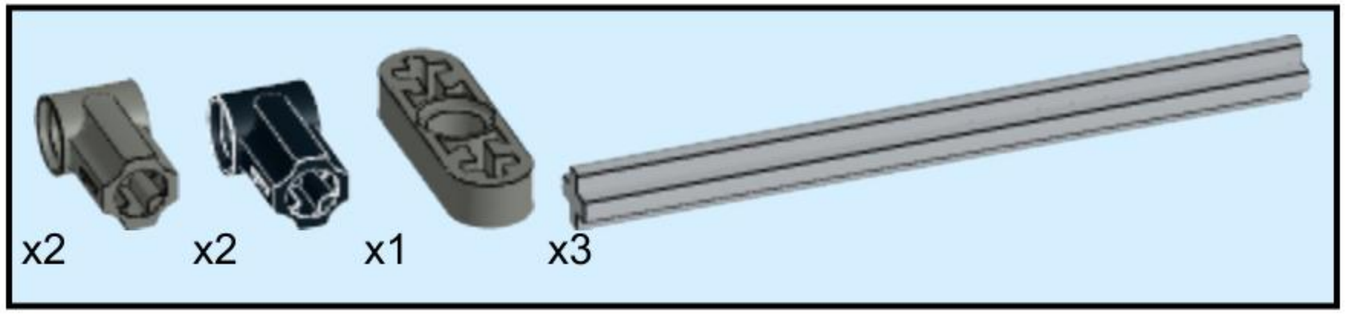

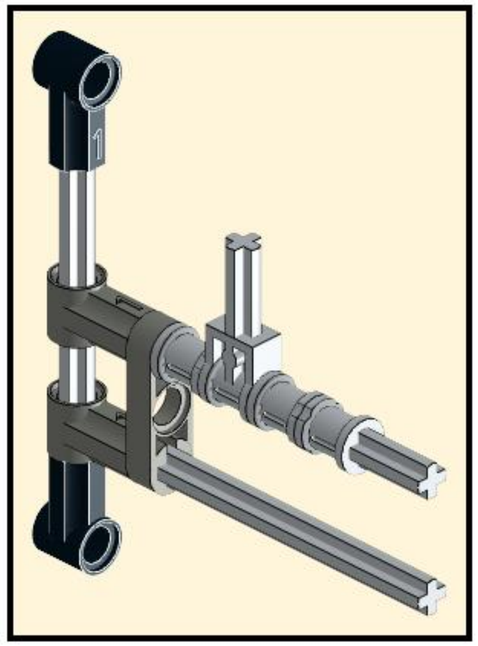

Five (5) of these assemblies will constructed and installed into the drive shaft in an identical manner. All Axles are 7L.

30

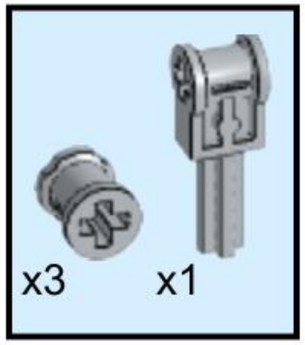

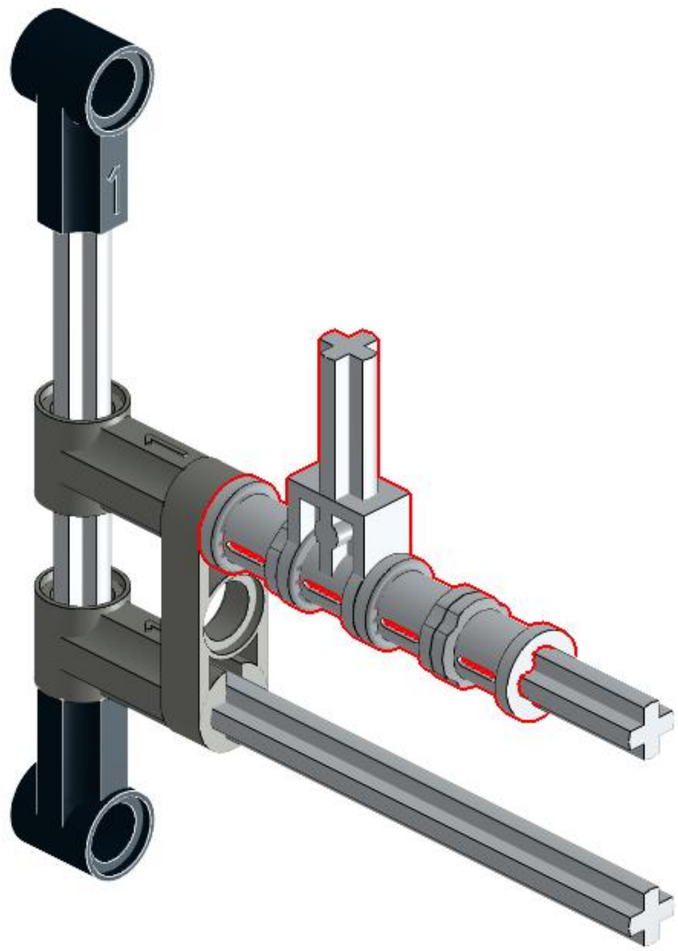

31

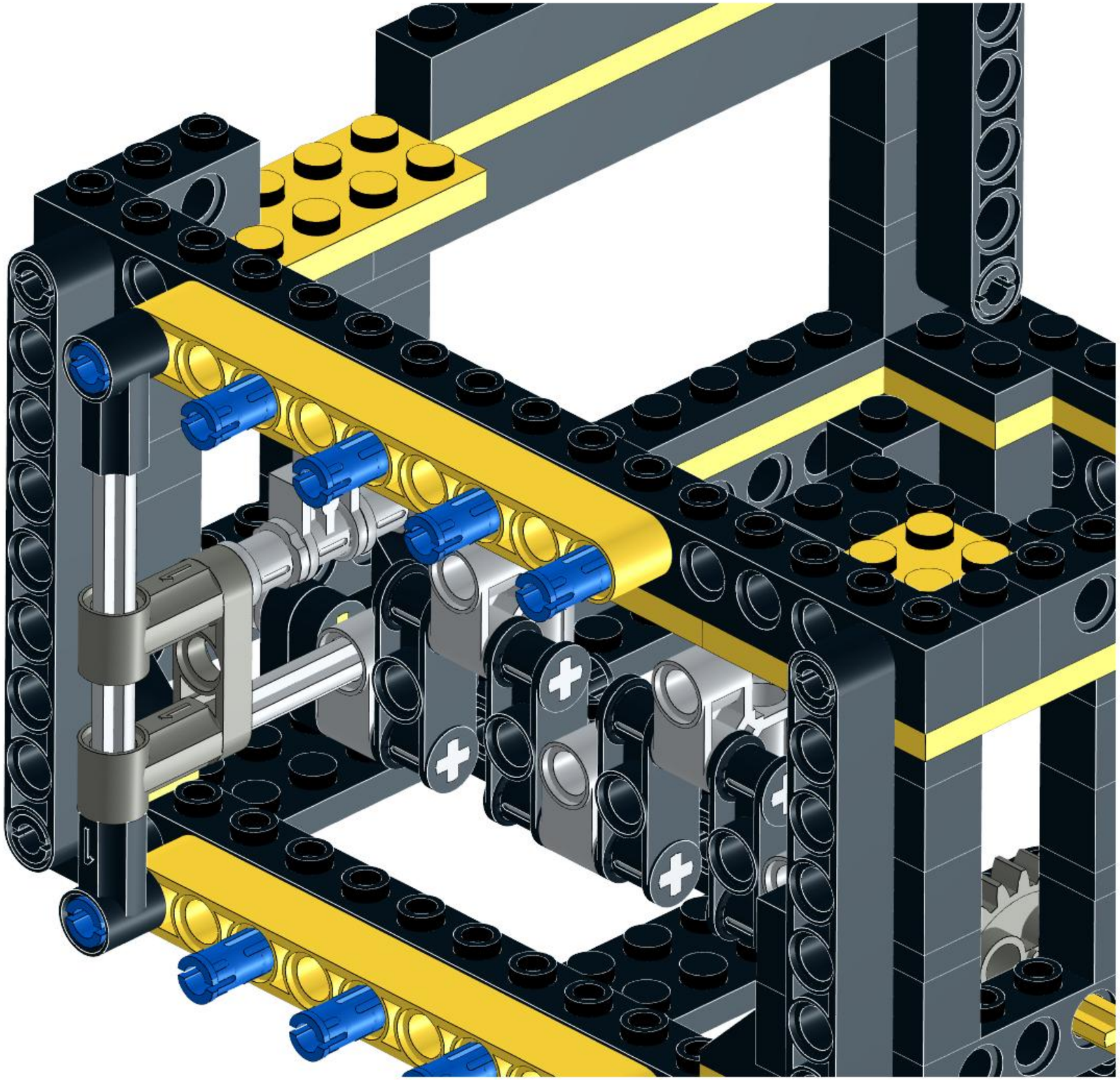

Alternate view
on next page.

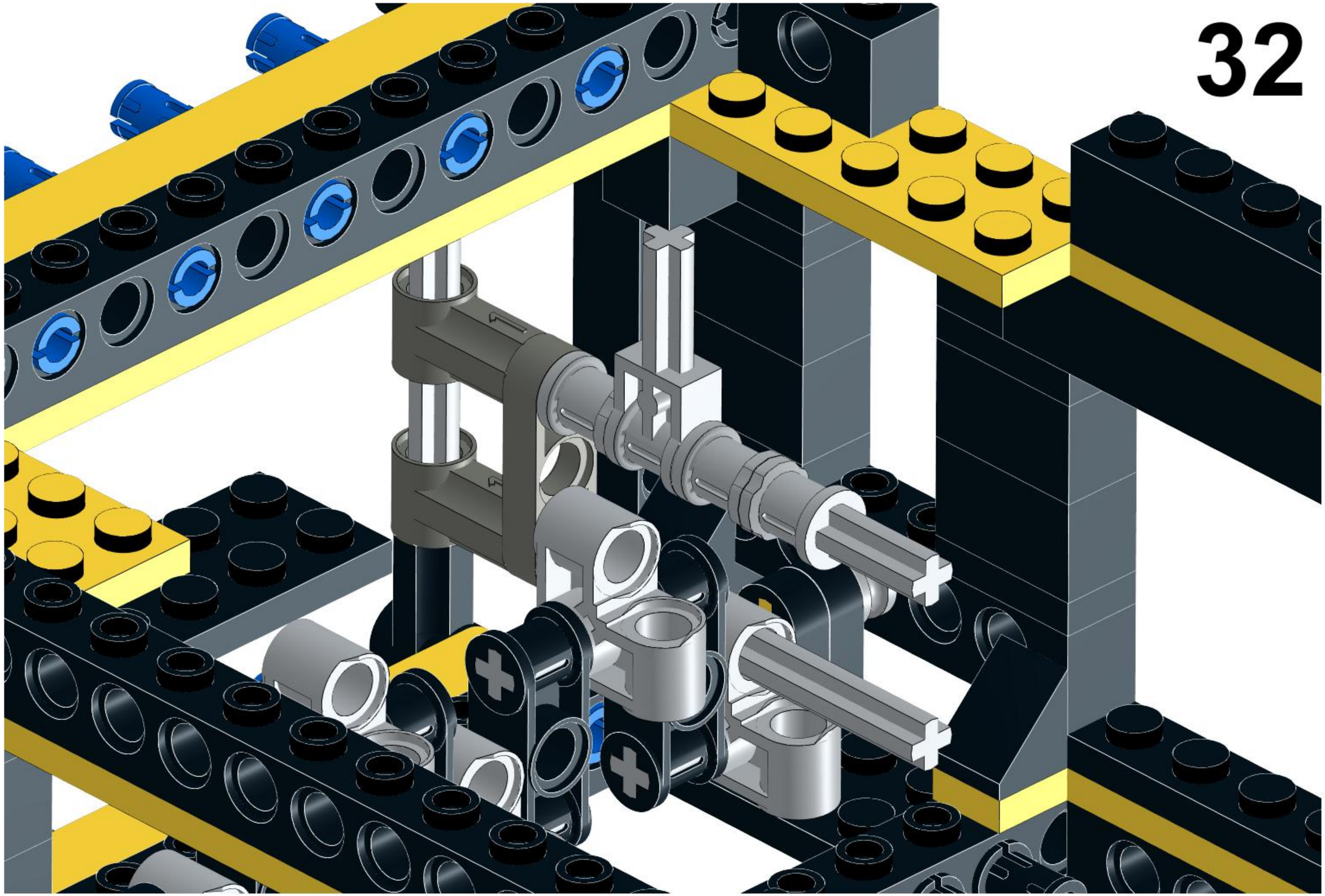

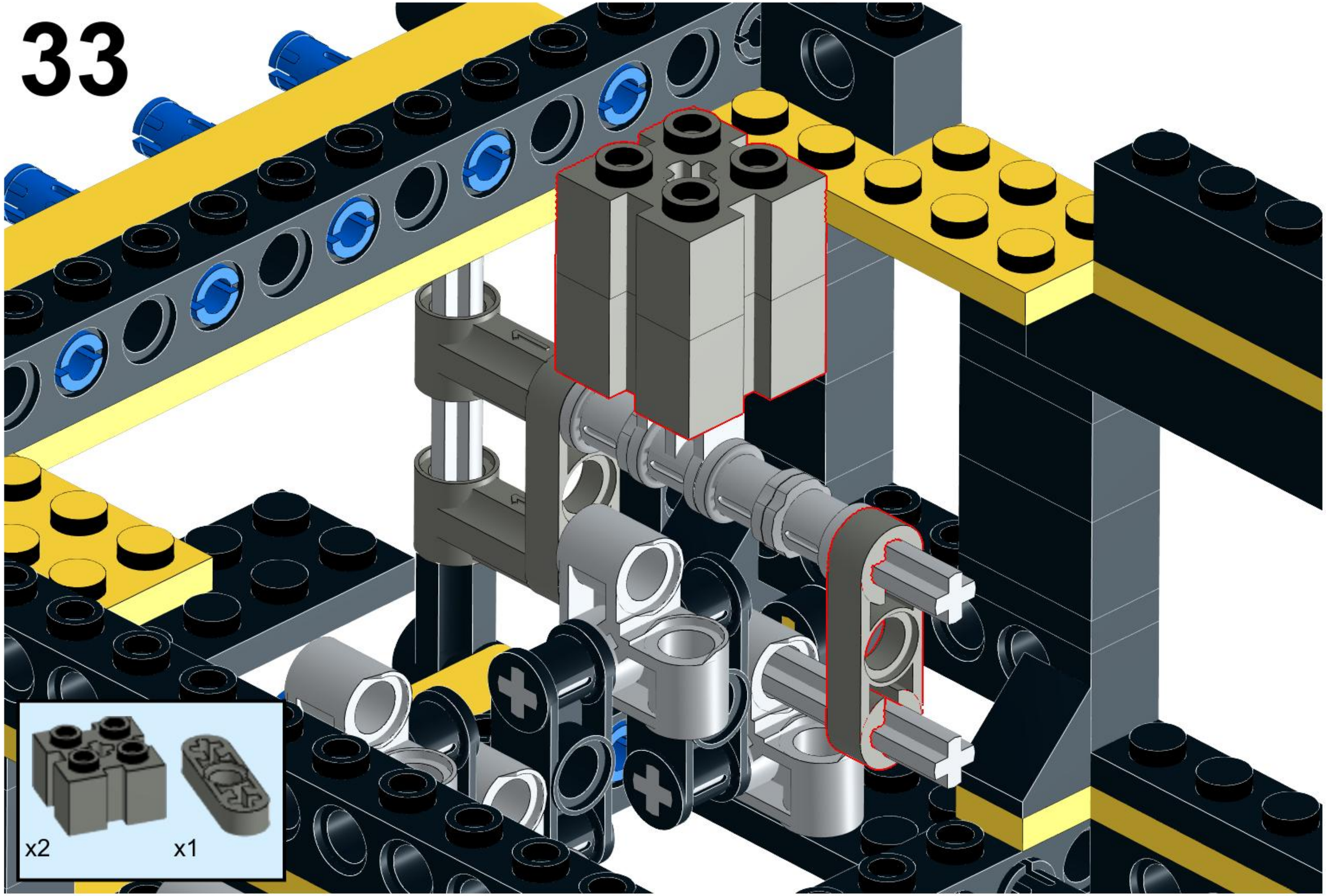
33
x2
x1

34

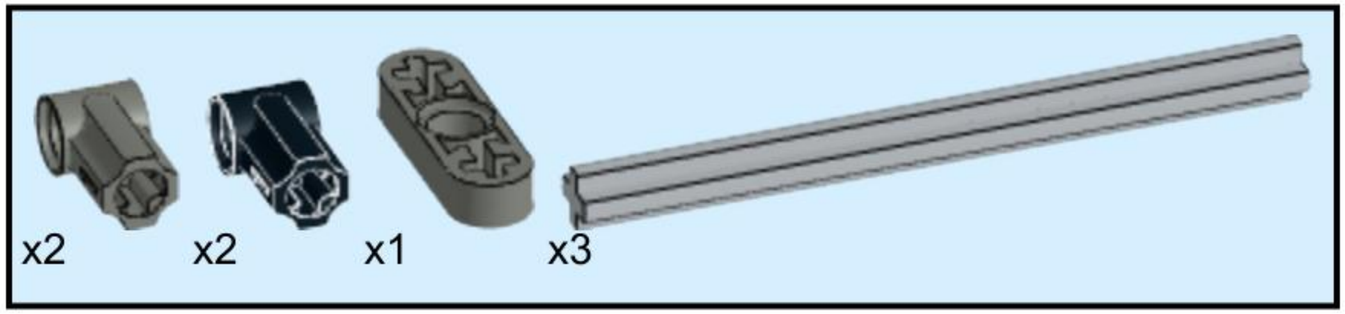

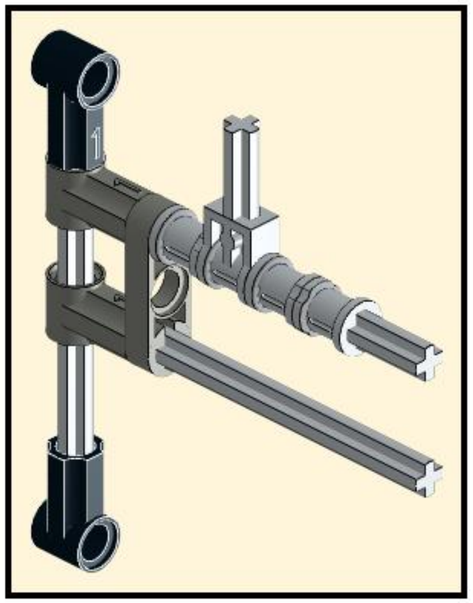

35

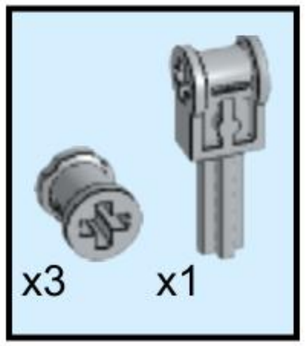

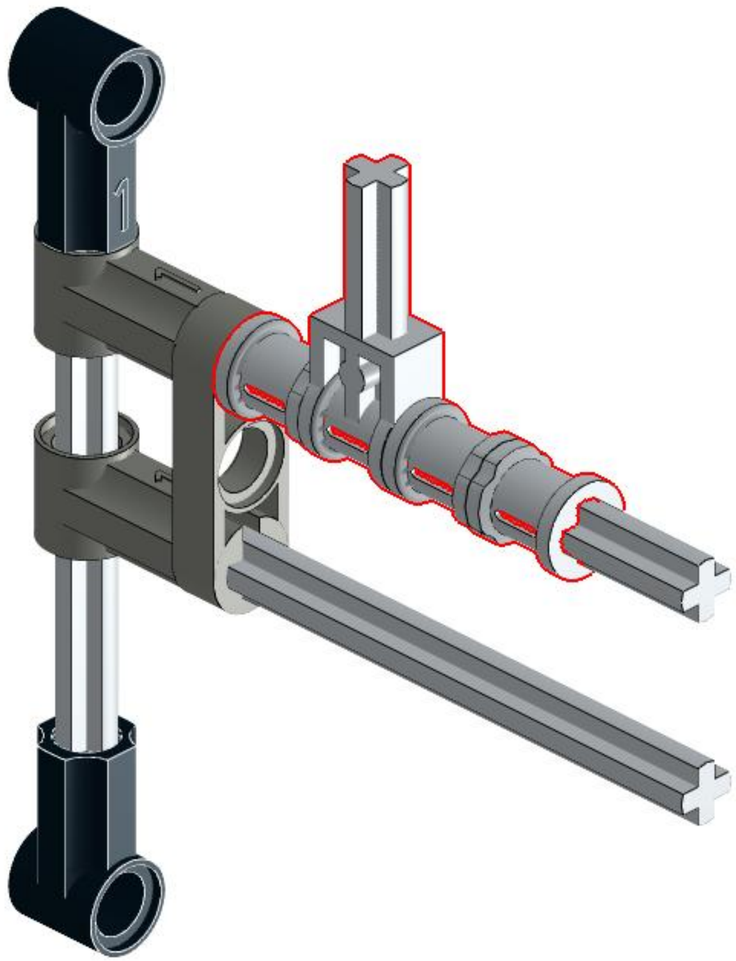

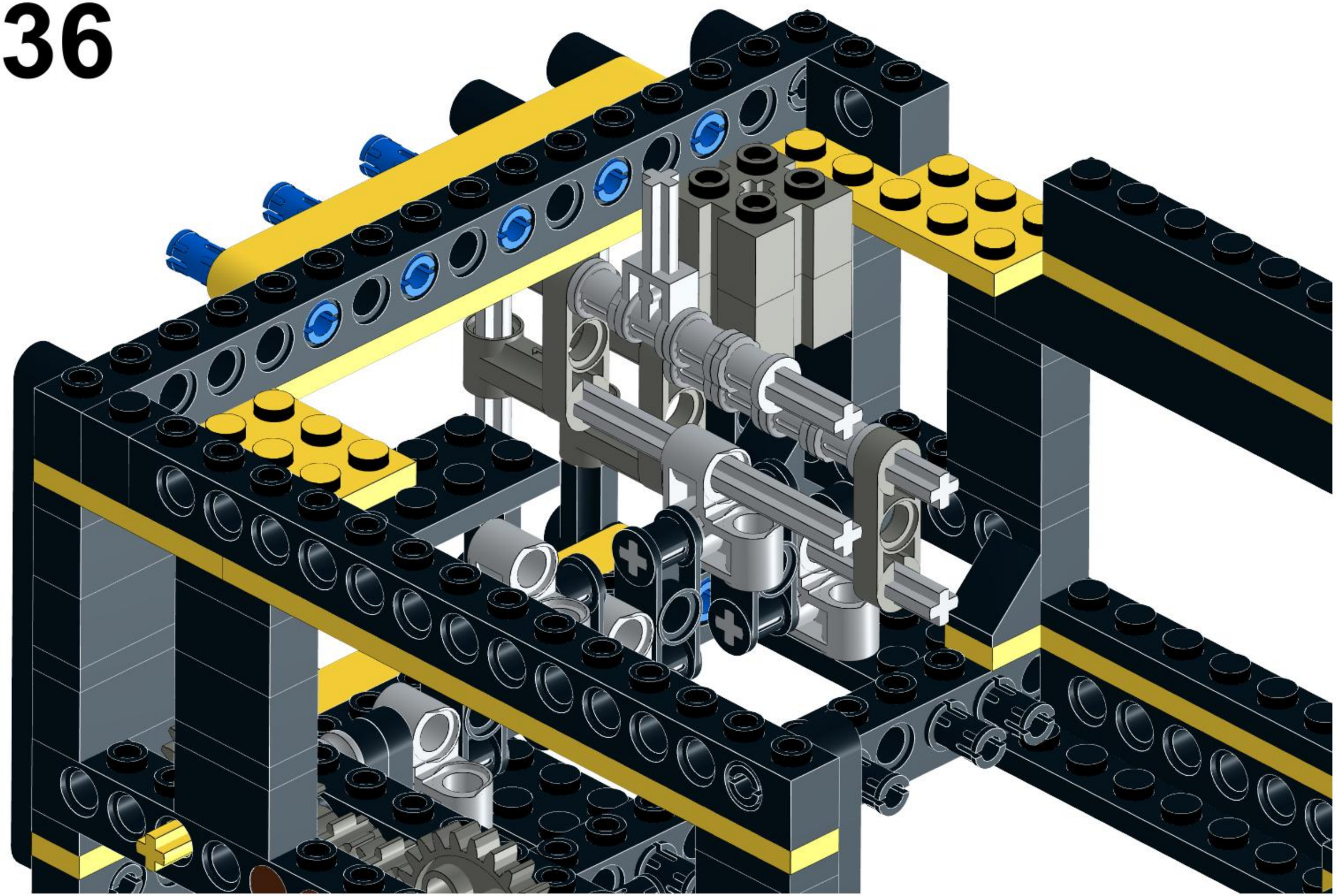

37

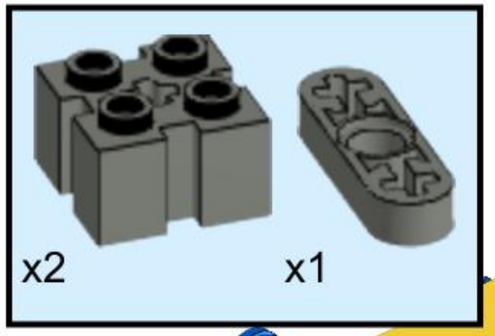

38

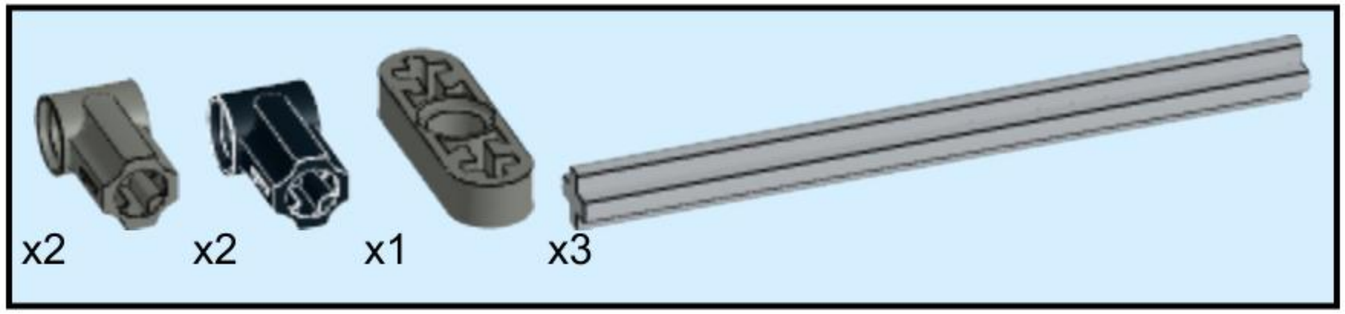

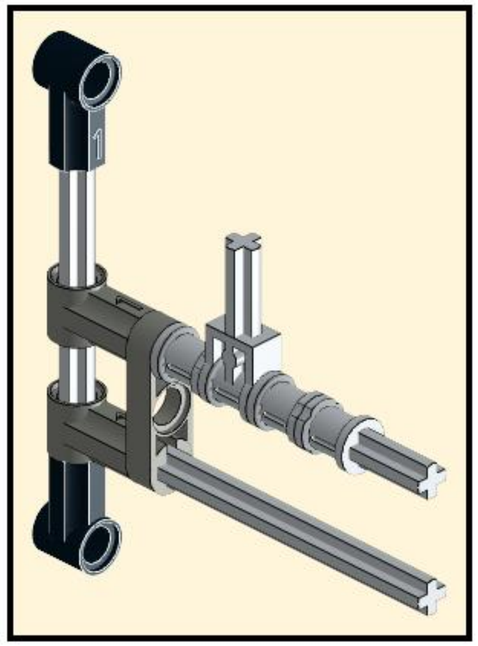

39

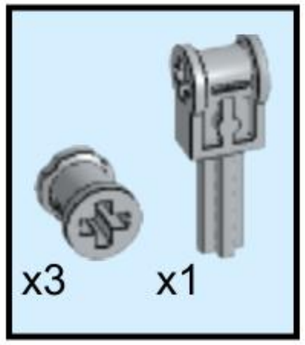

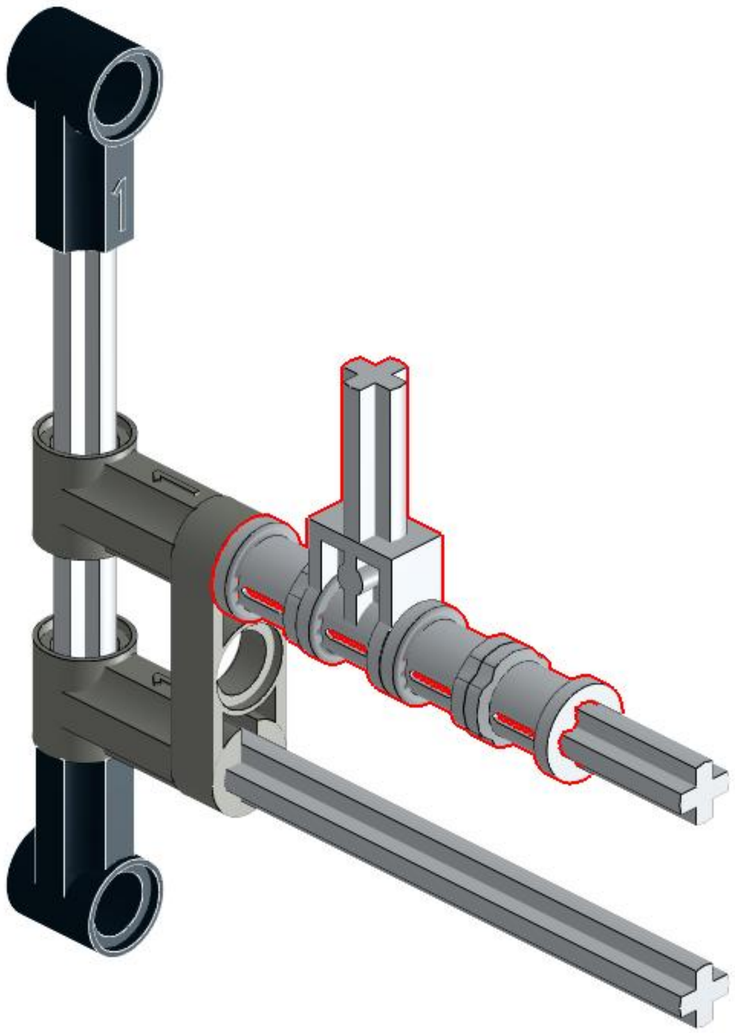

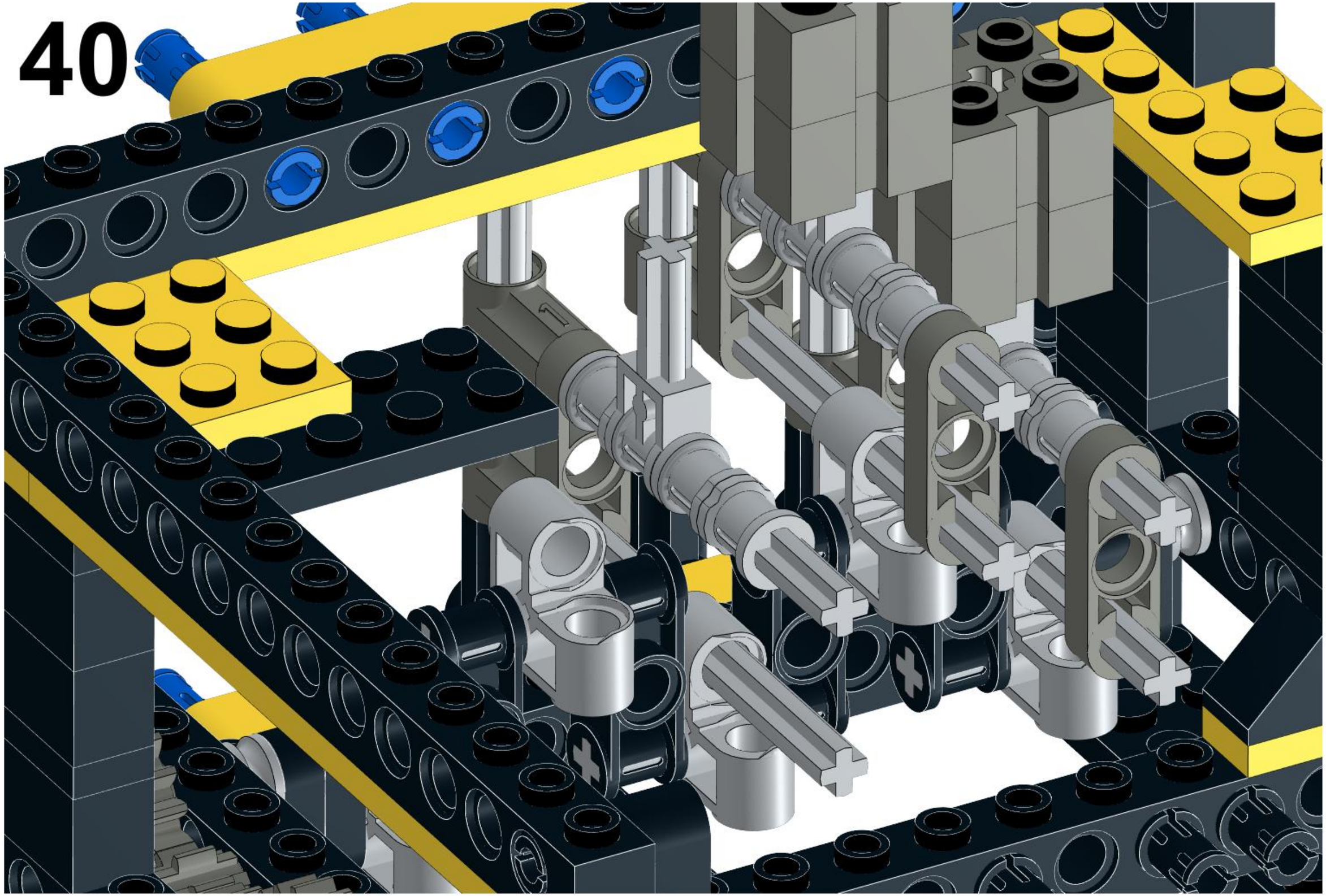

41

42

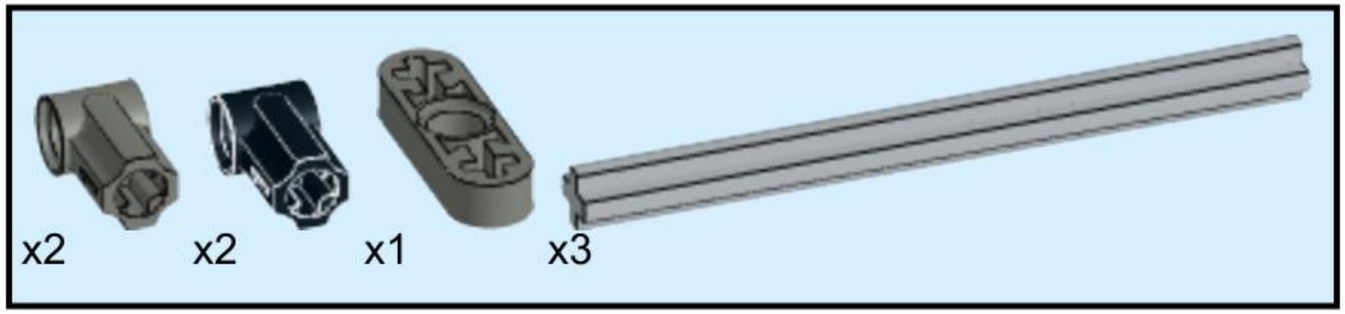

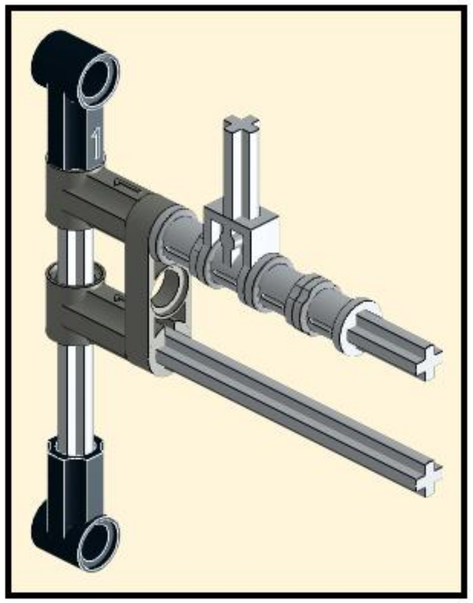

43

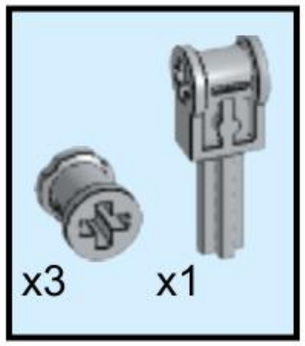

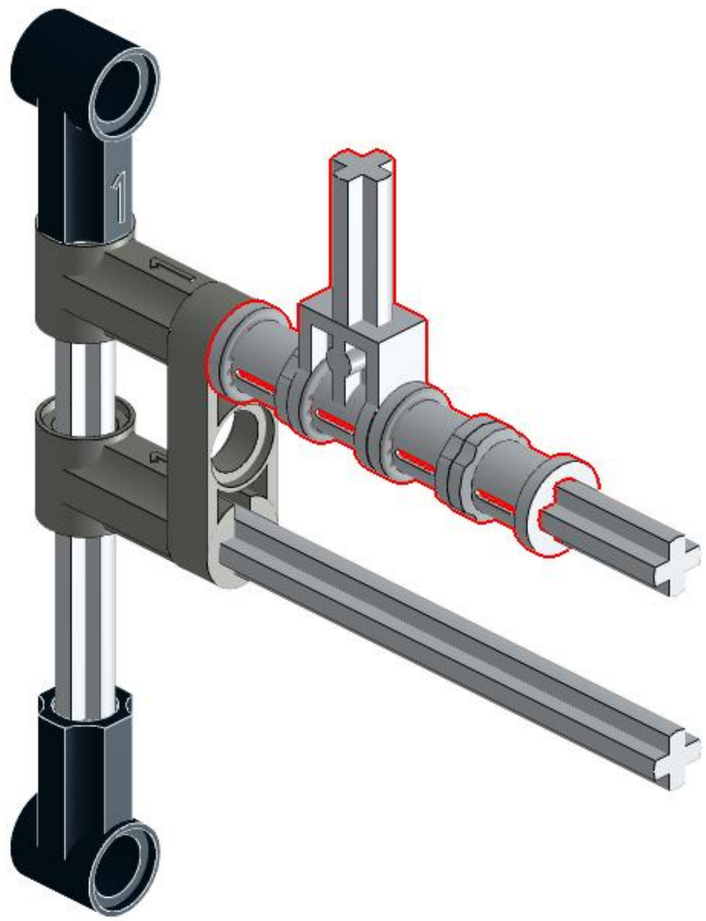

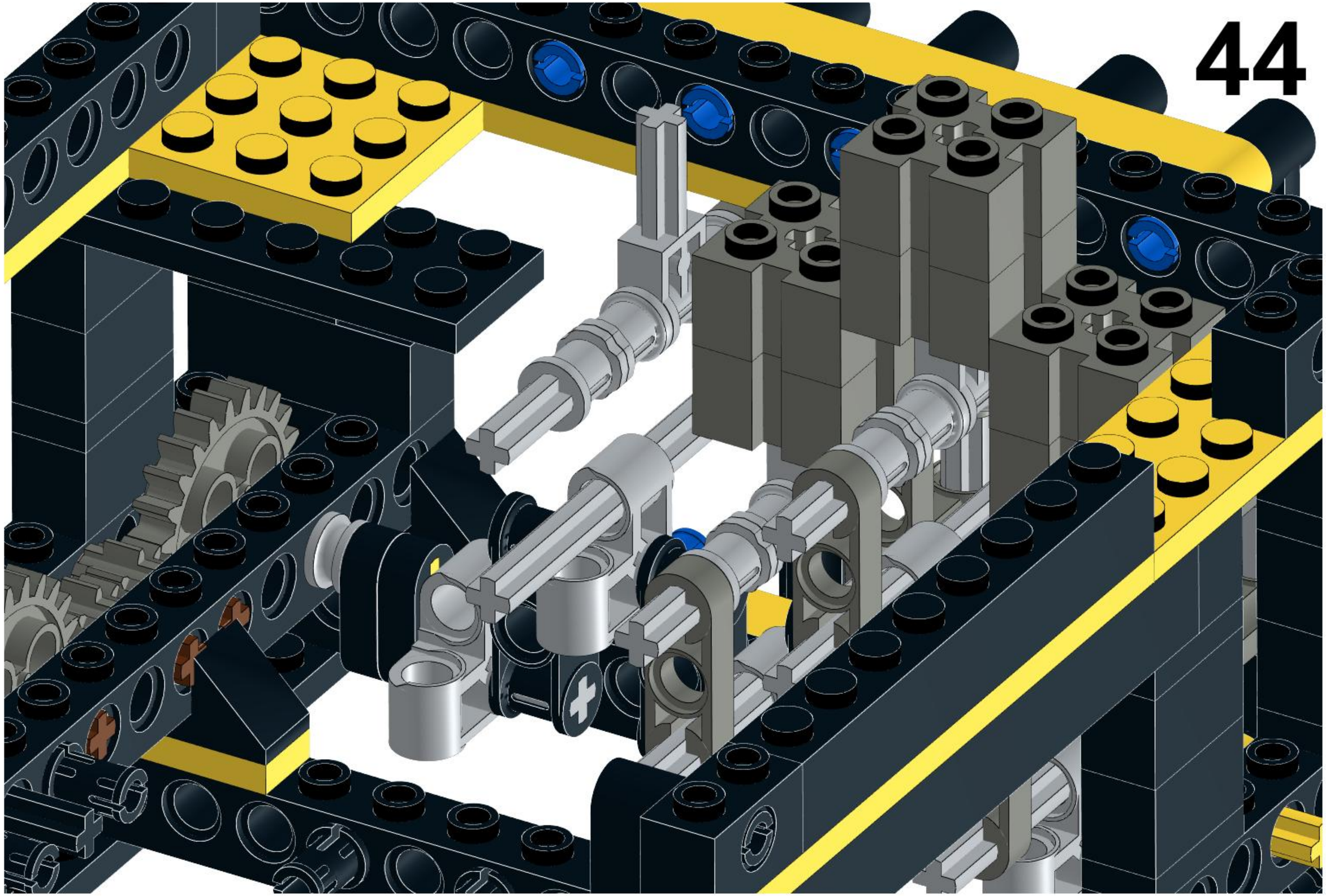

45

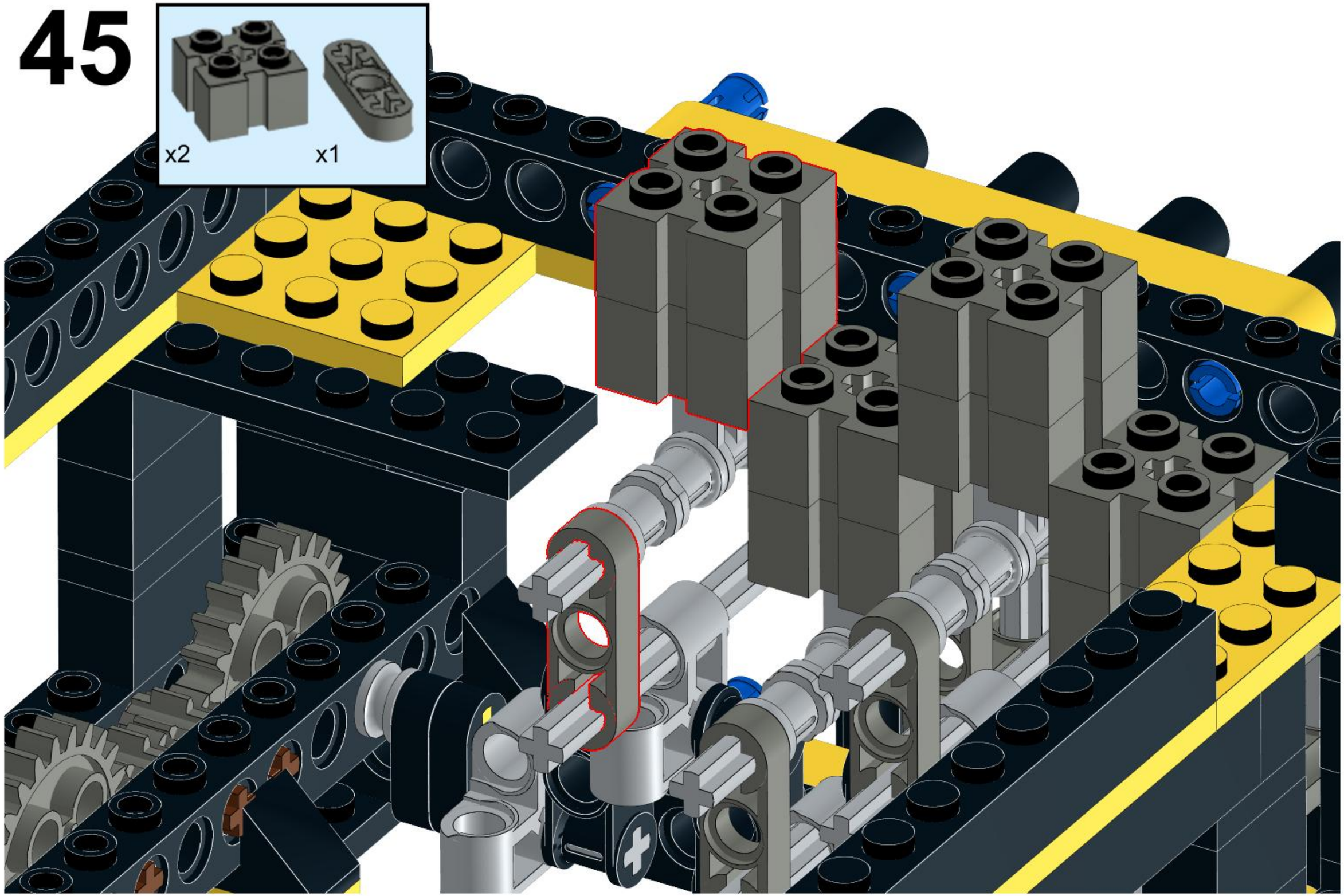

46

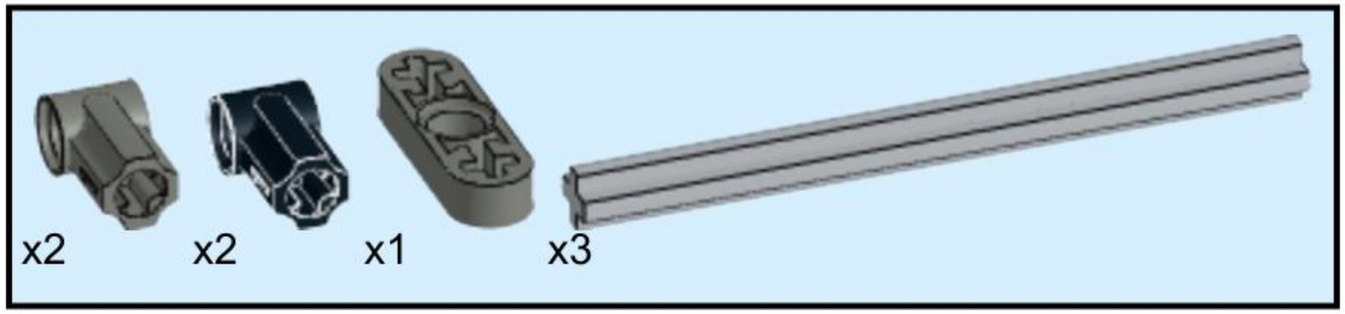

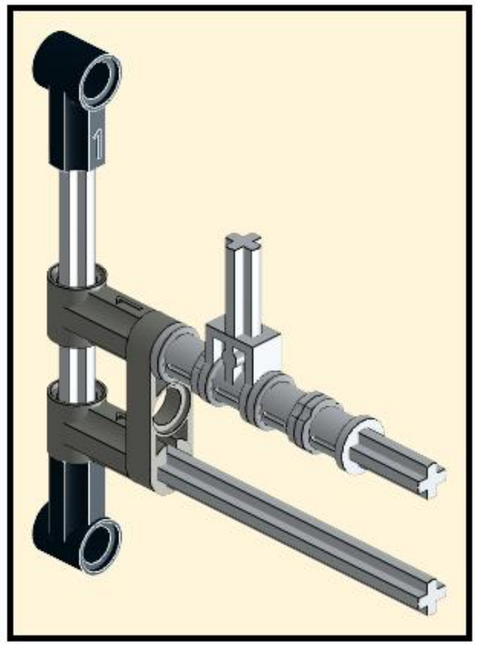

47

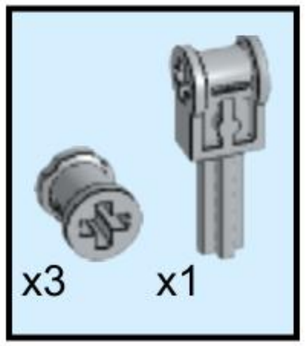

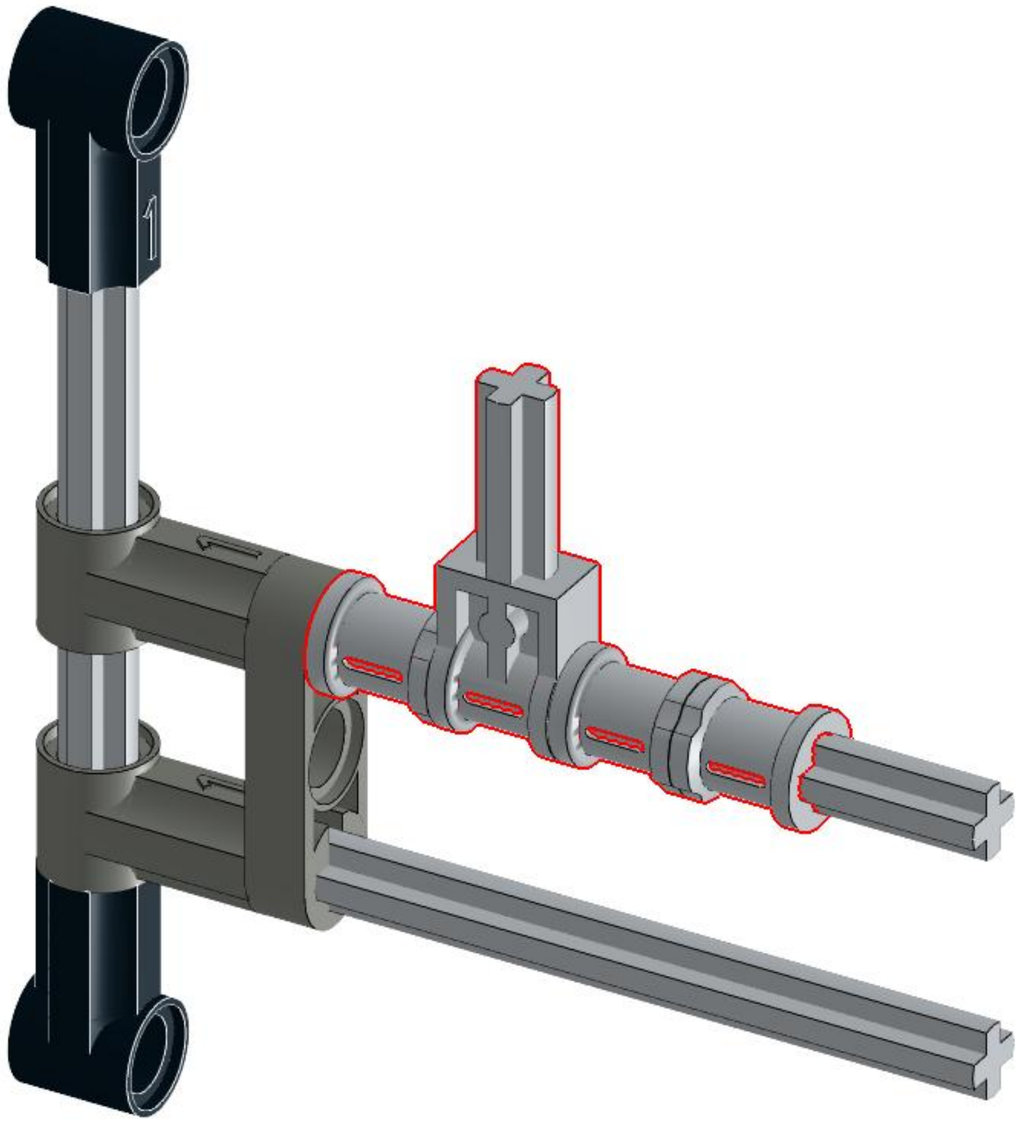

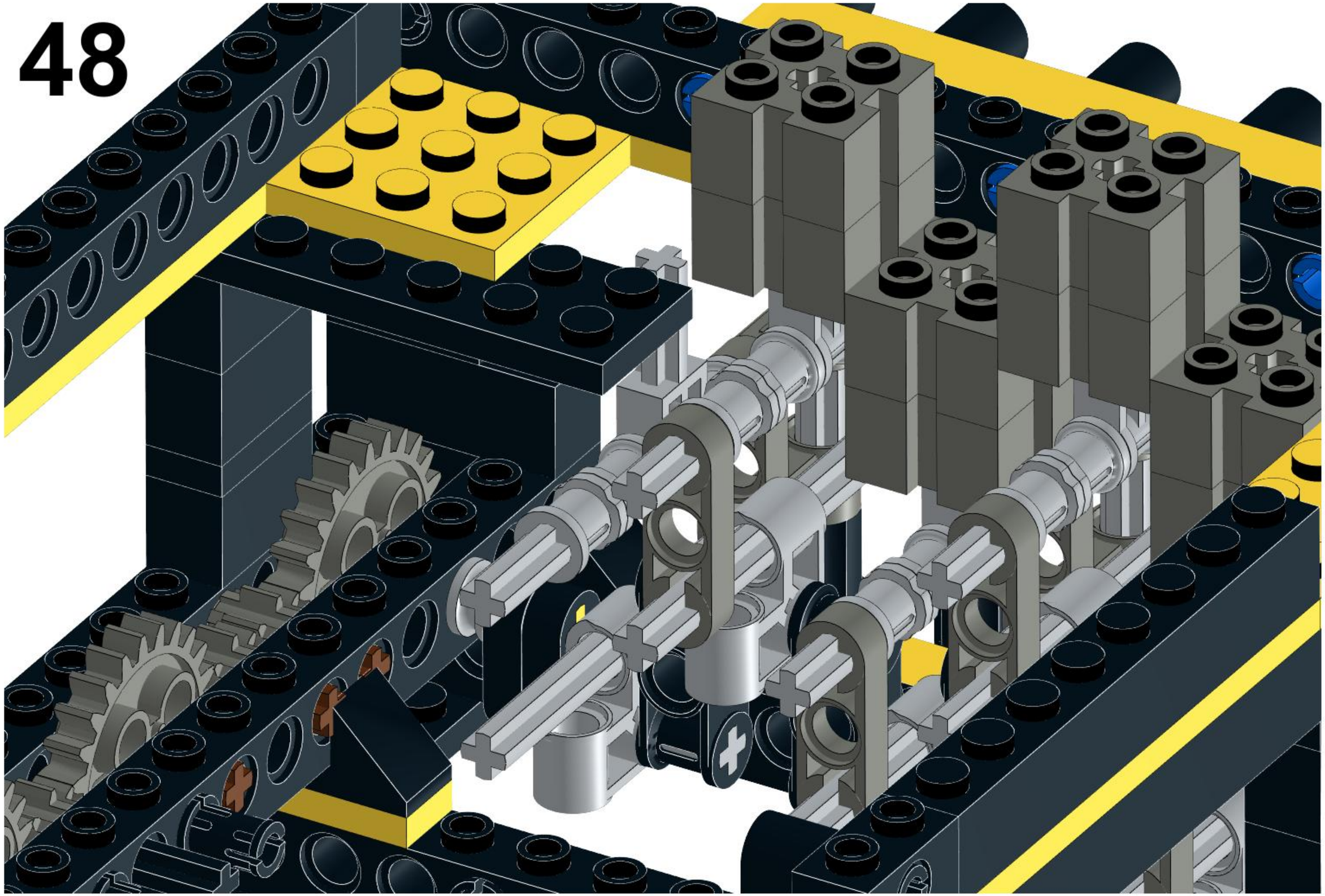

49

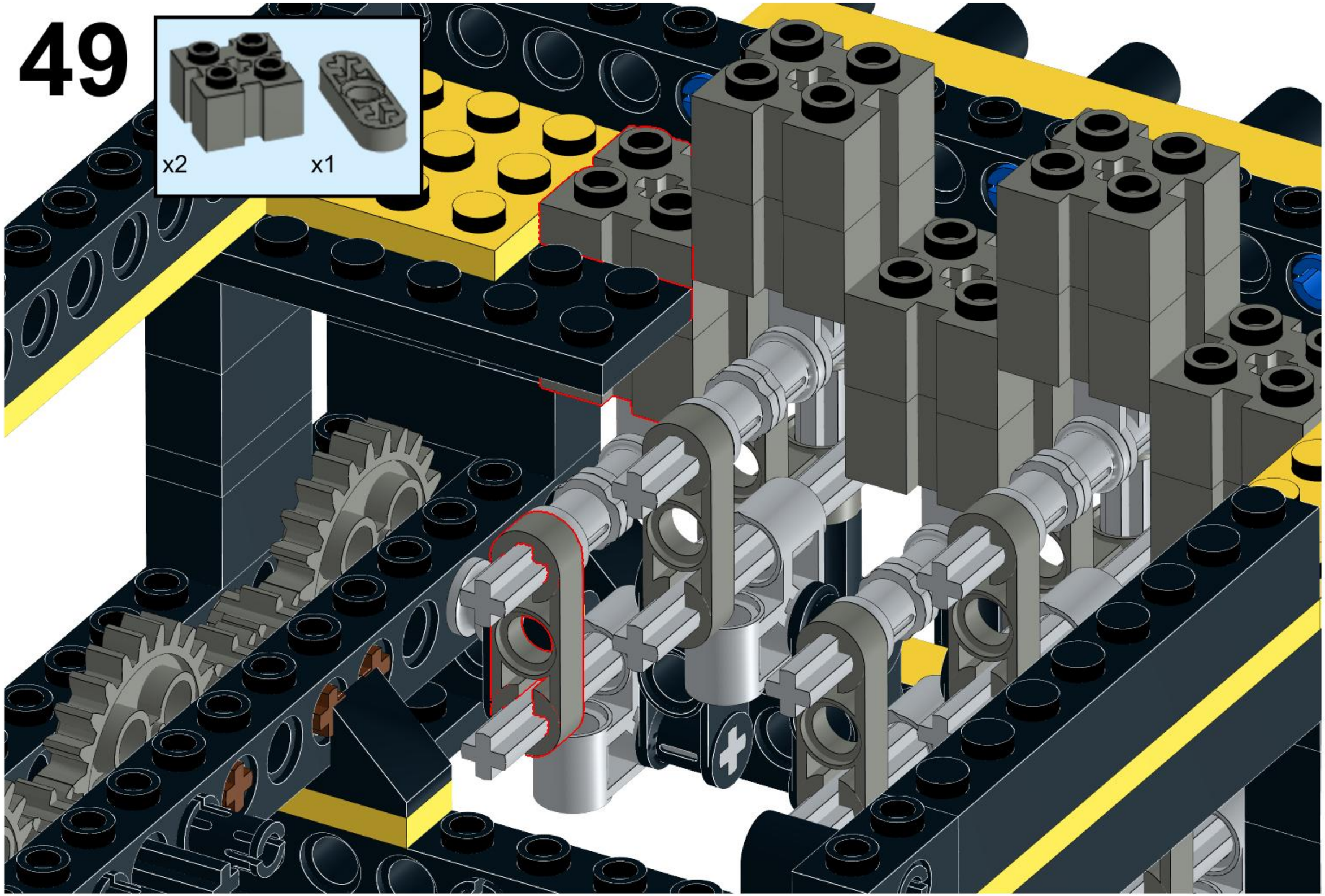

50

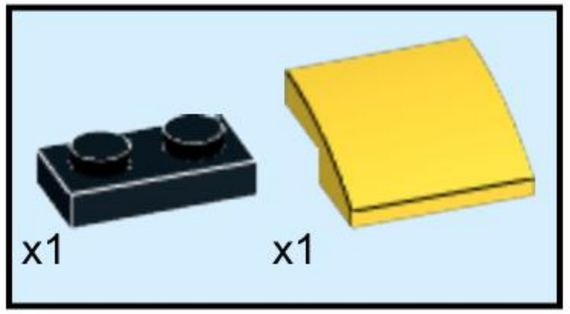

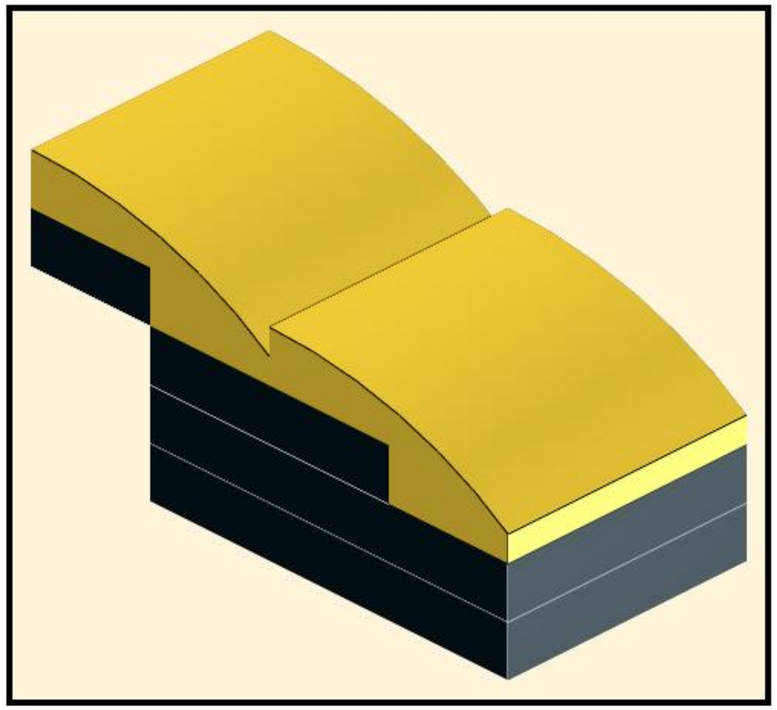

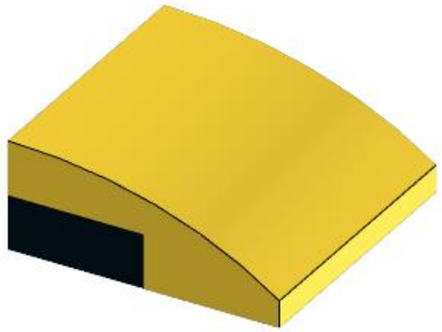

51

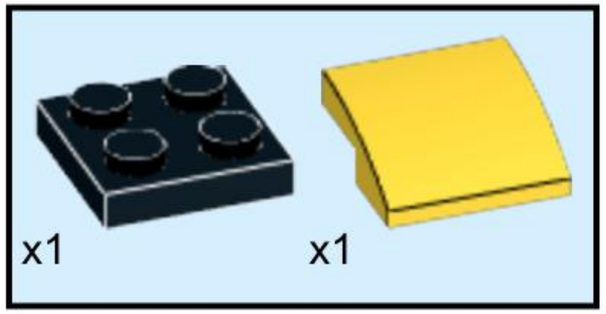

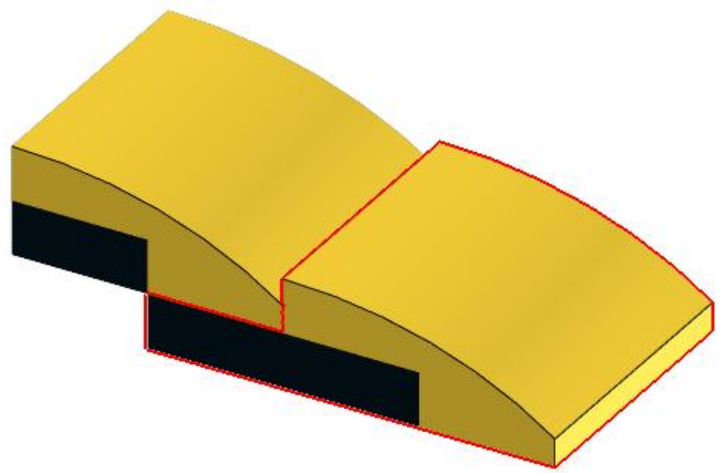

52

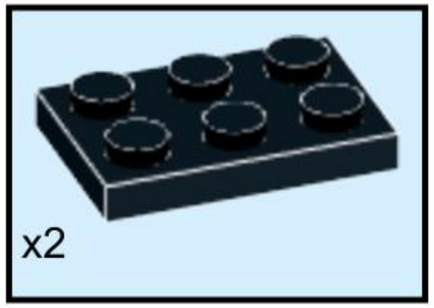

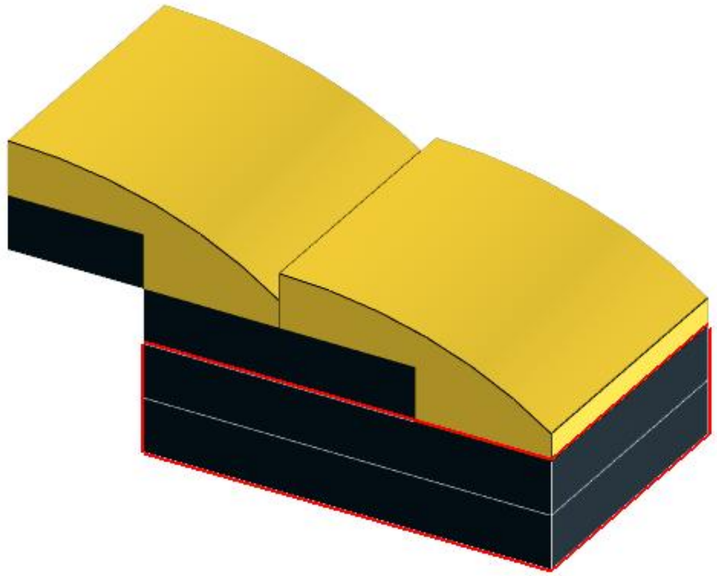

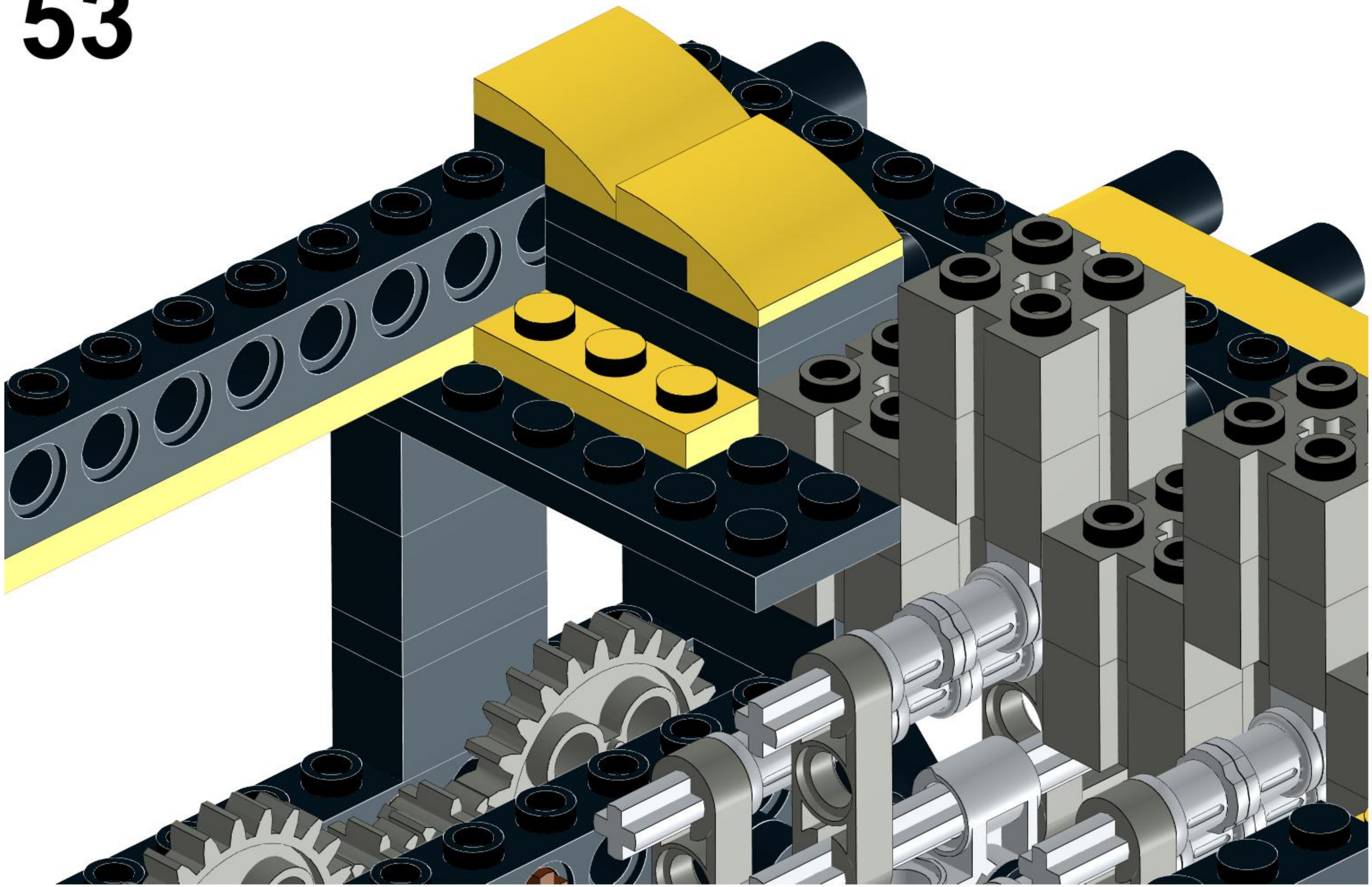

54

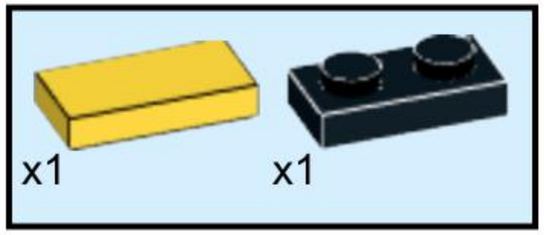

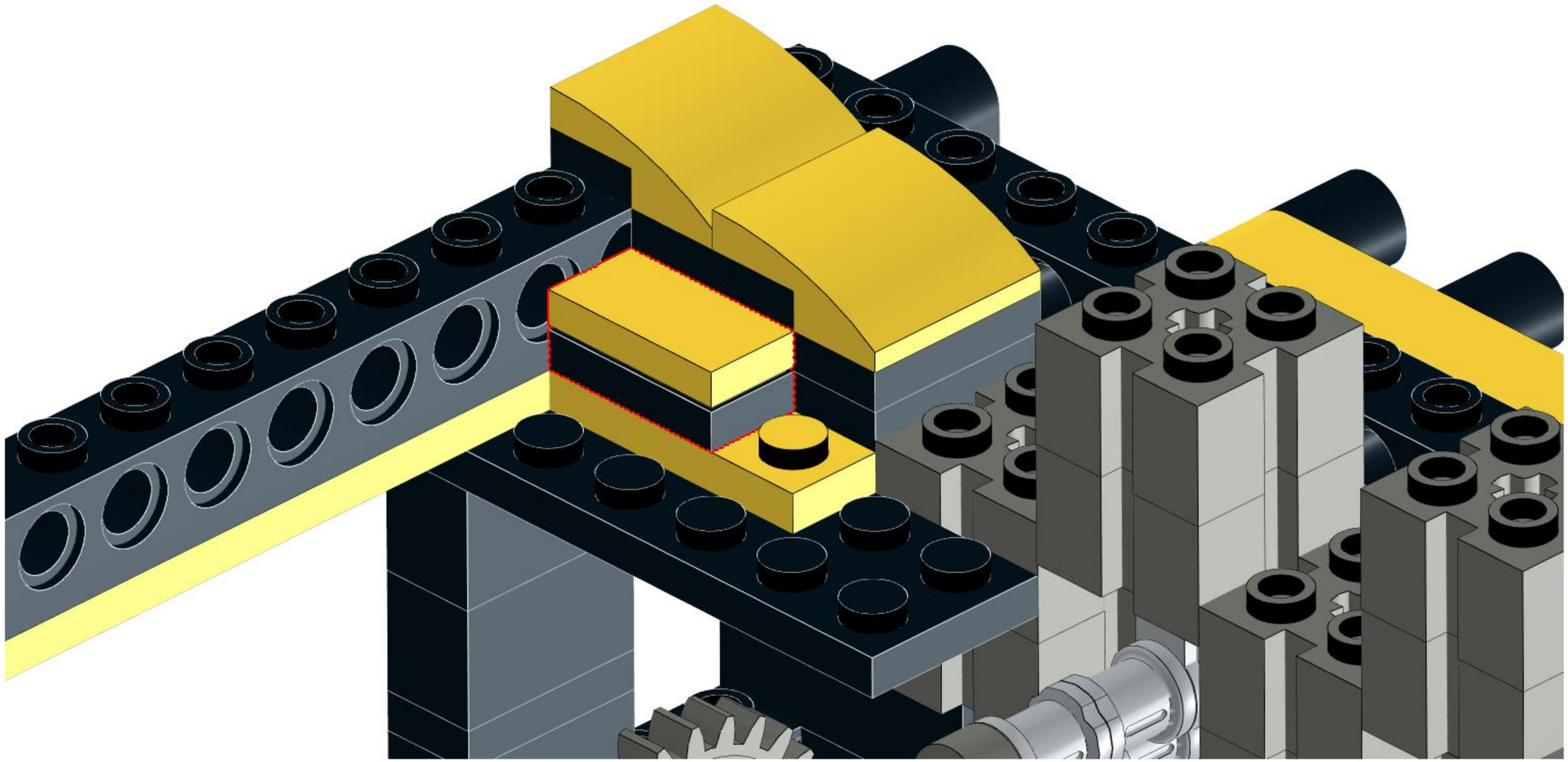

55

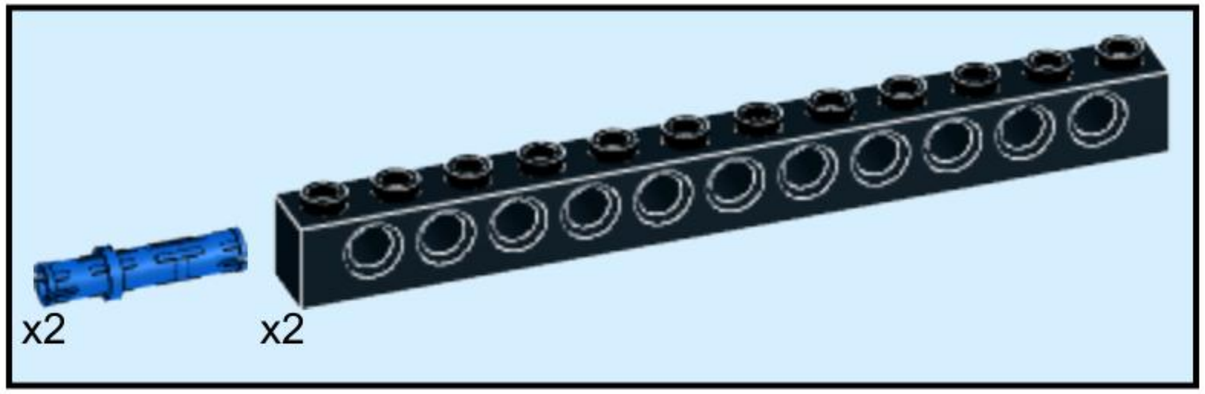

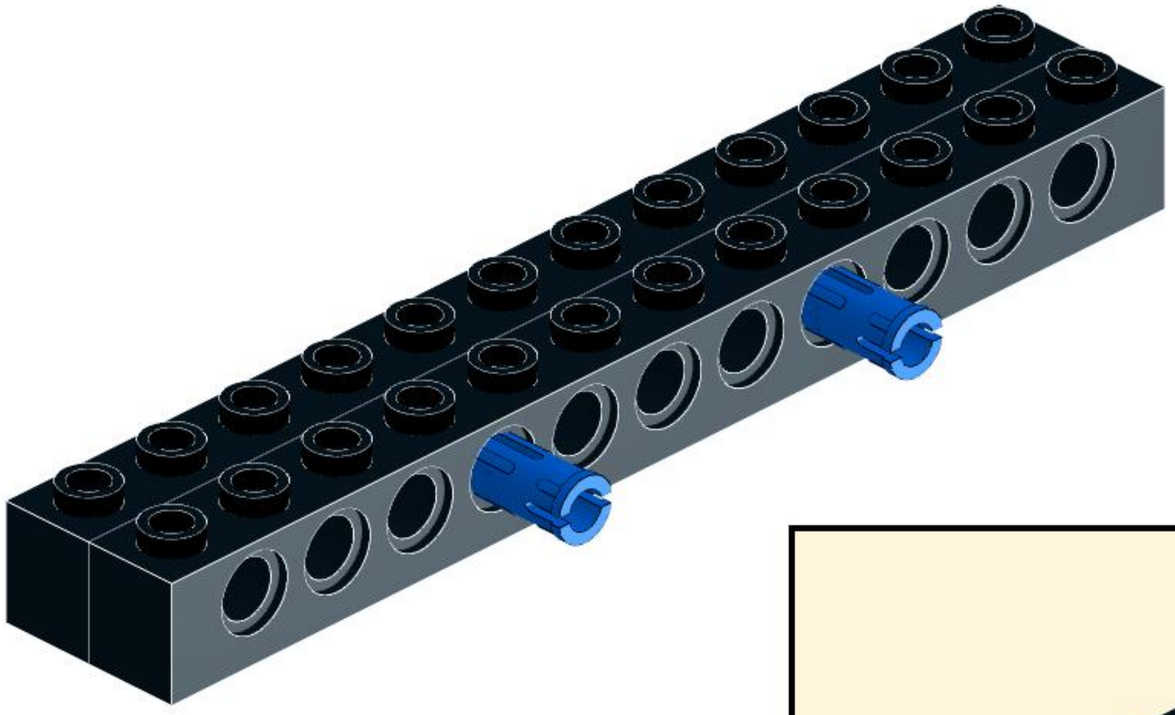

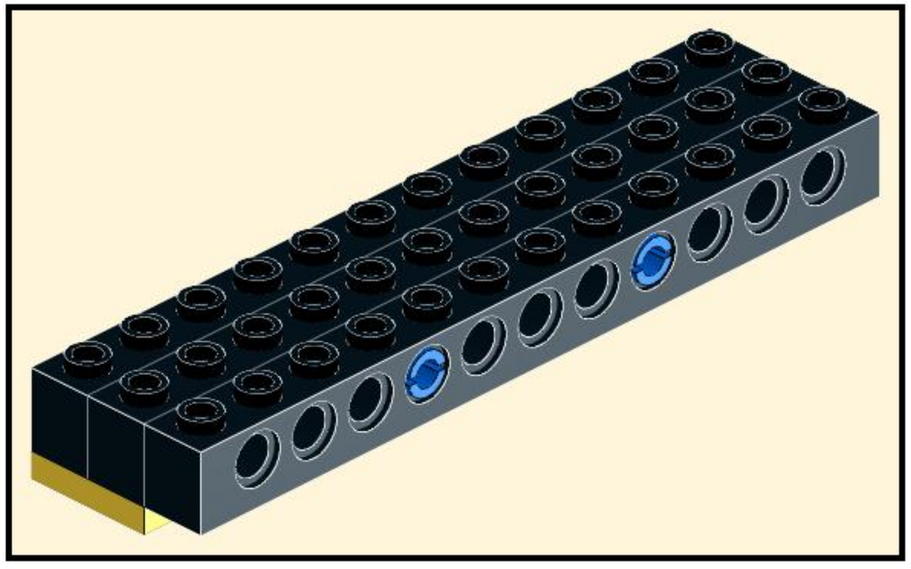

56

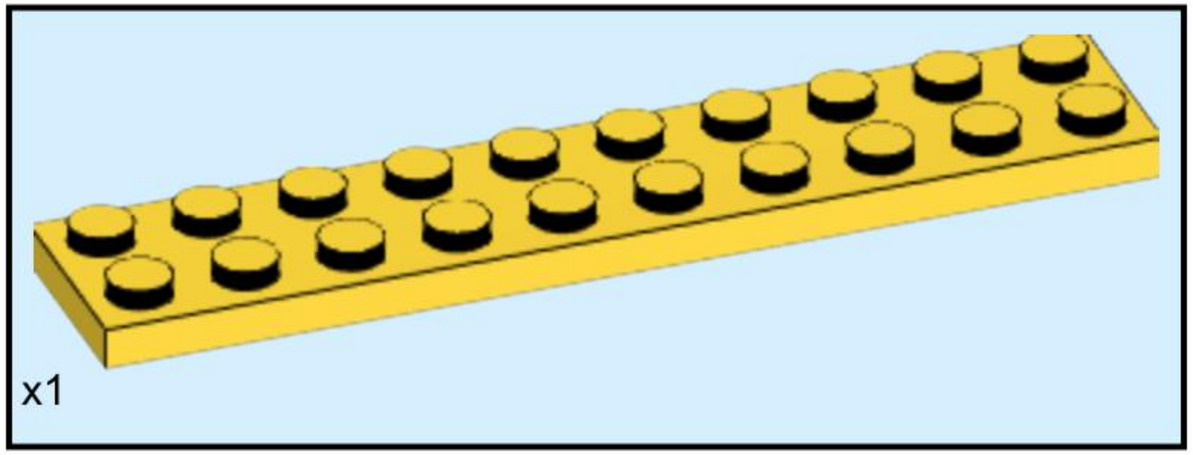

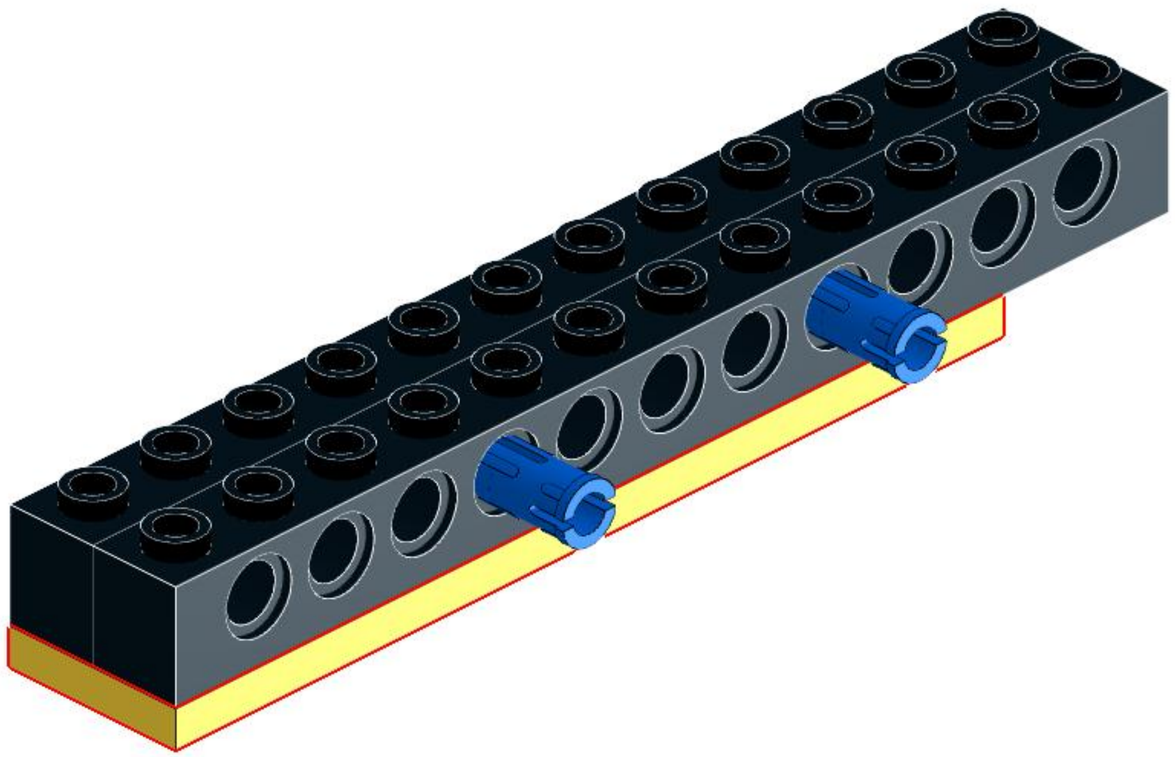

57

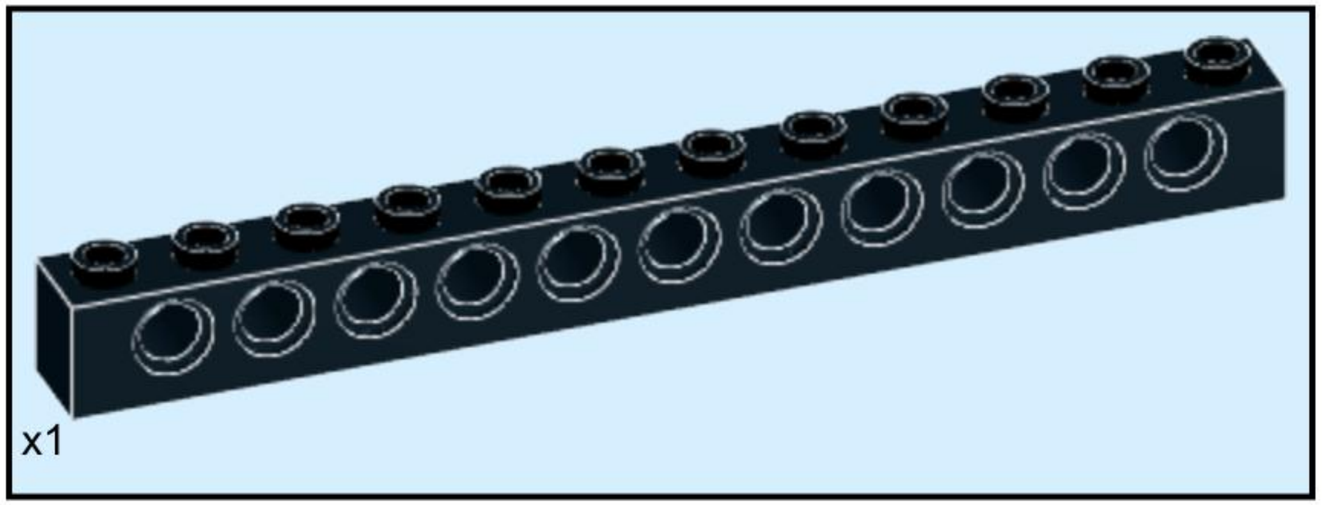

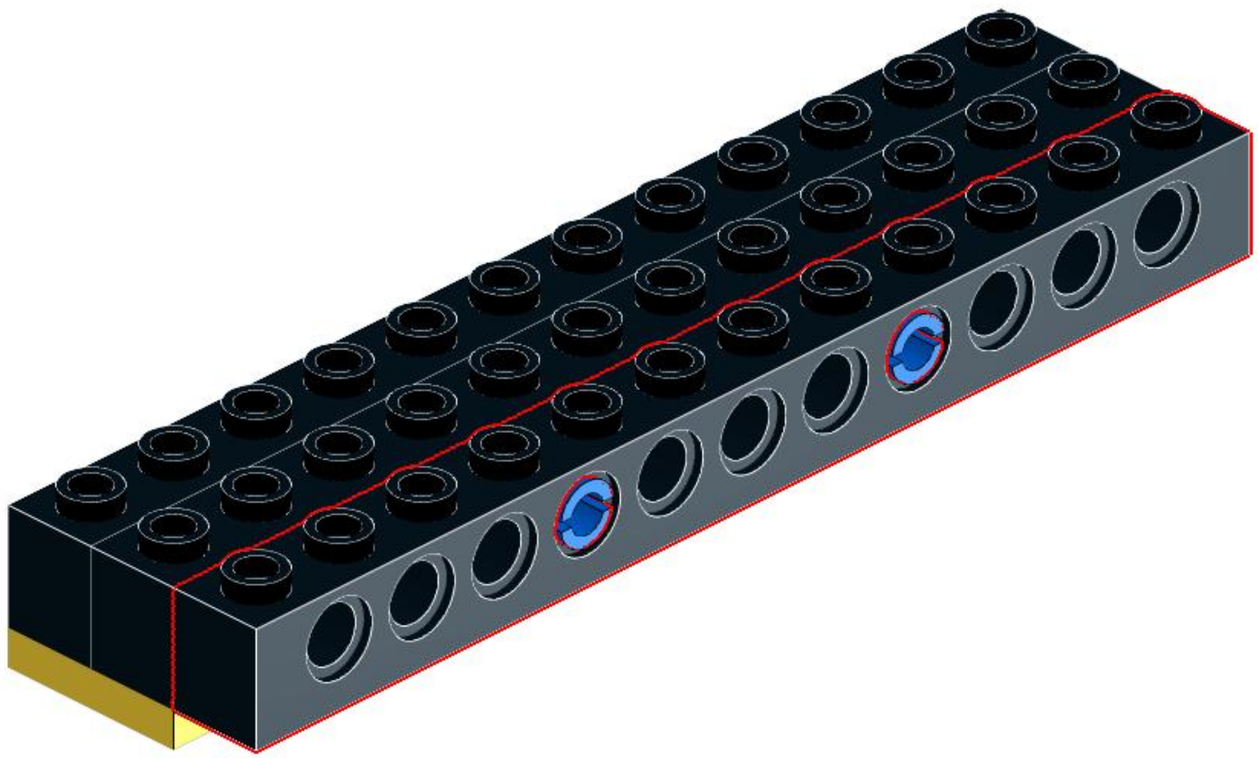

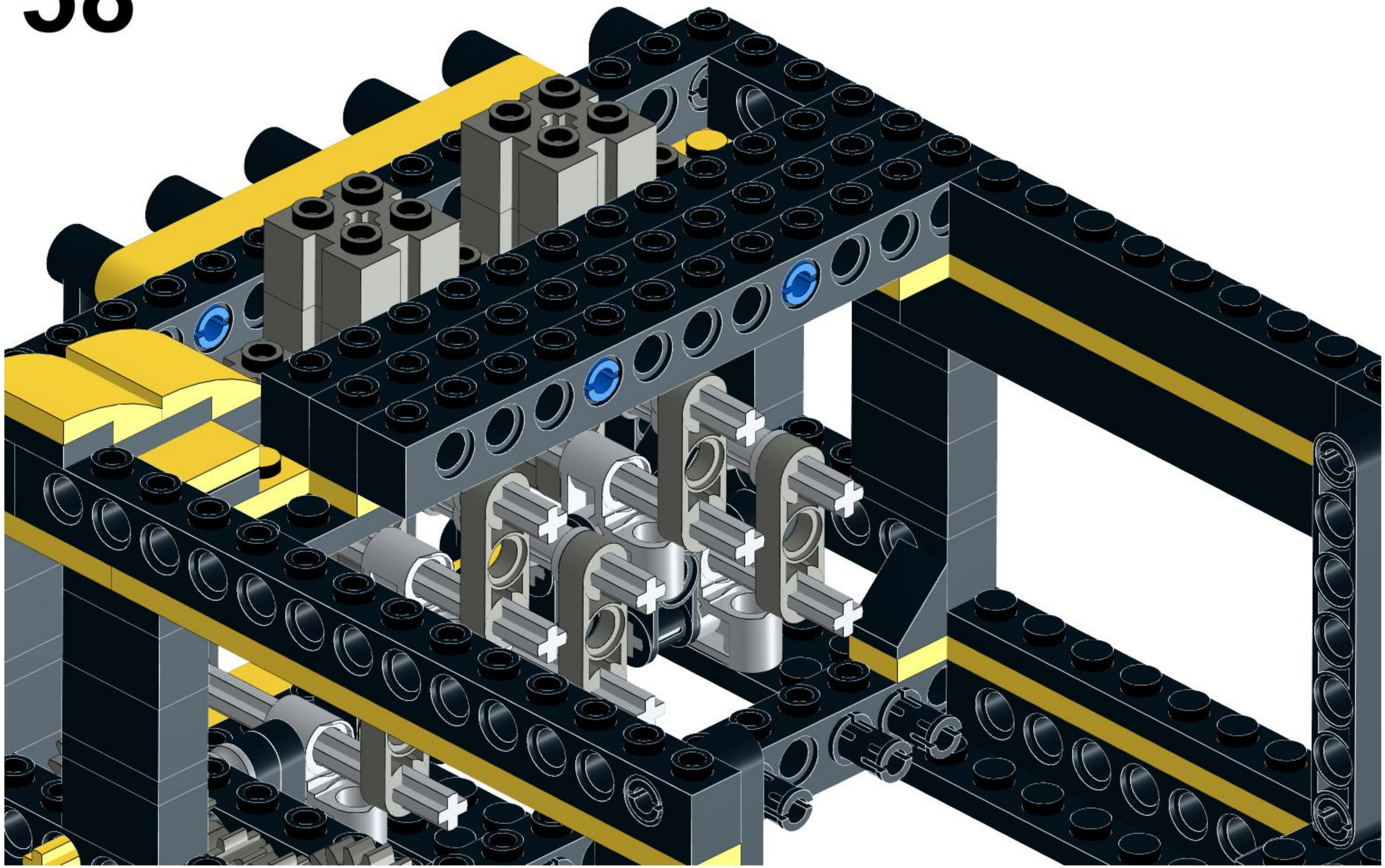

59

60

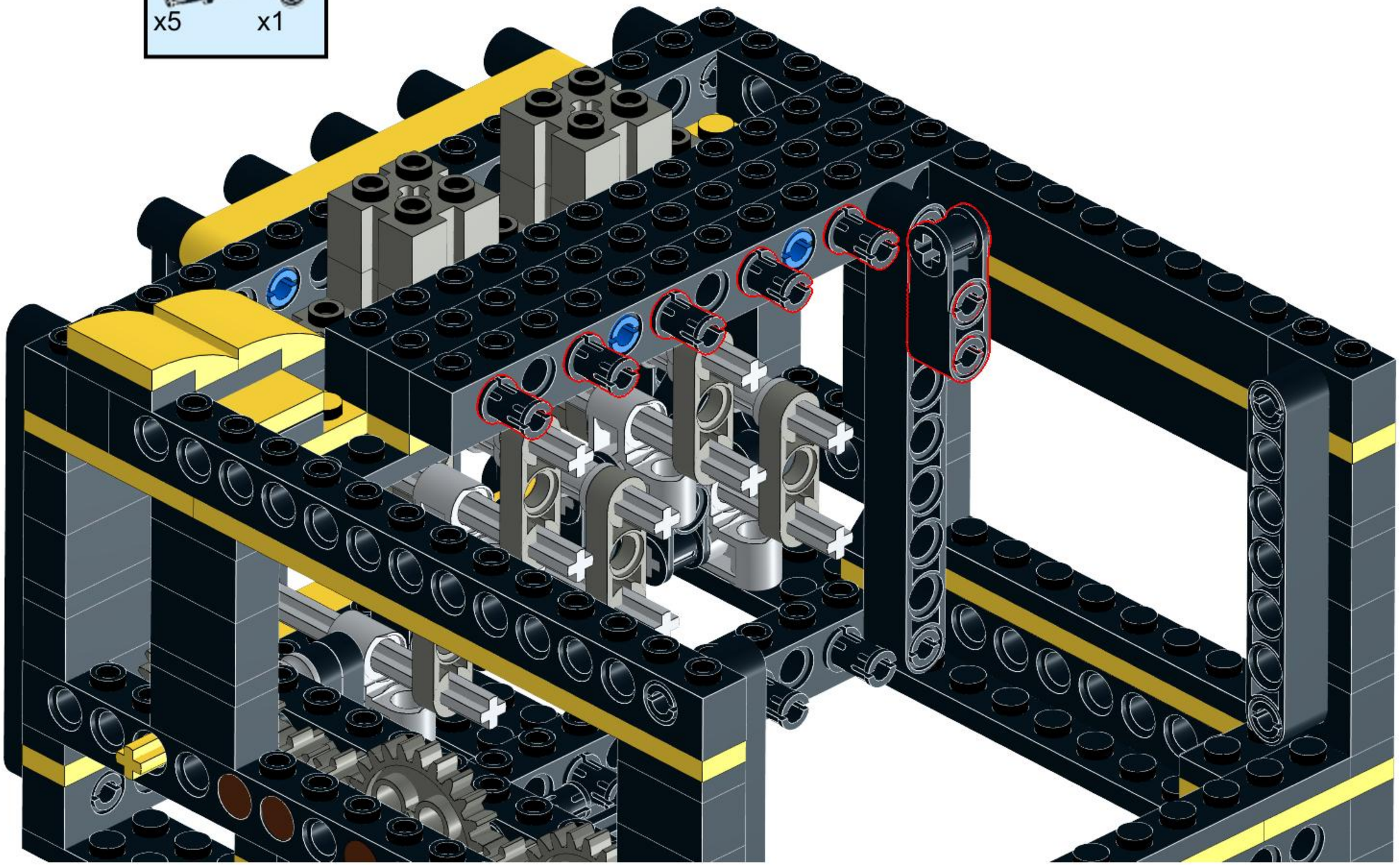

61

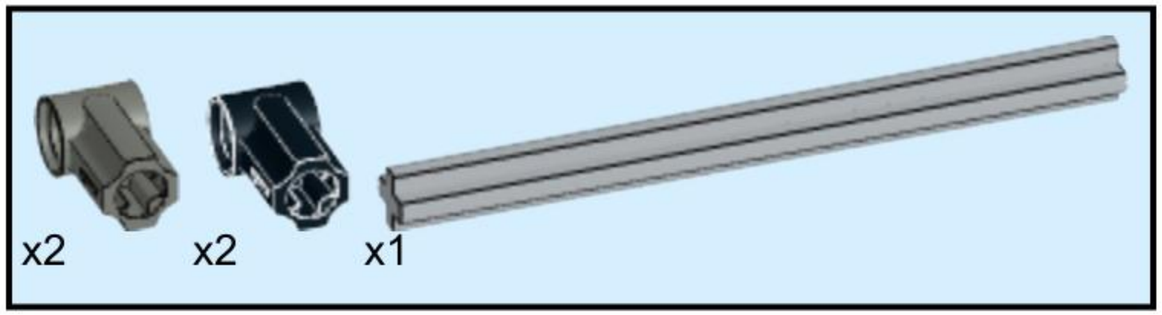

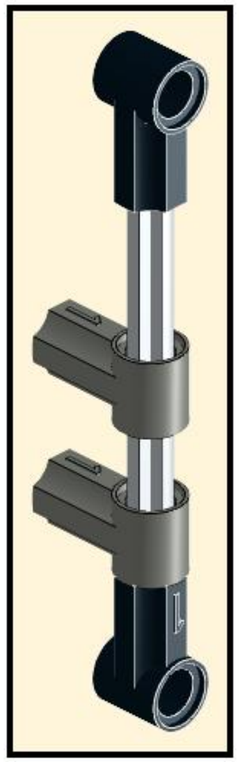

Five (5) of these assemblies will be constructed and attached in an identical manner.
All axles are 7L.

62

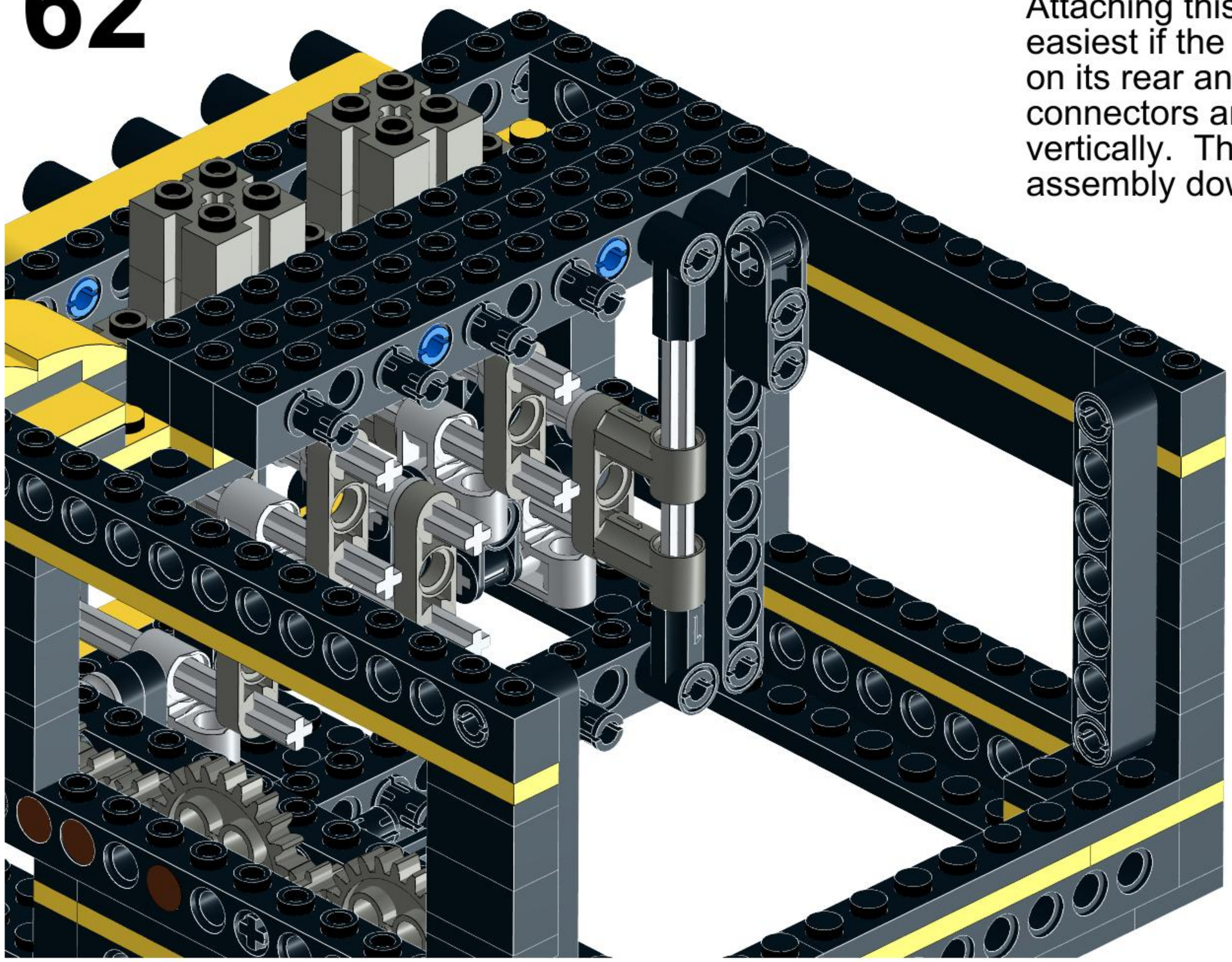

Note:

Attaching this assembly is easiest if the module is standing on its rear and the grey connectors are hanging vertically. Then slide the assembly down onto the axles.

63

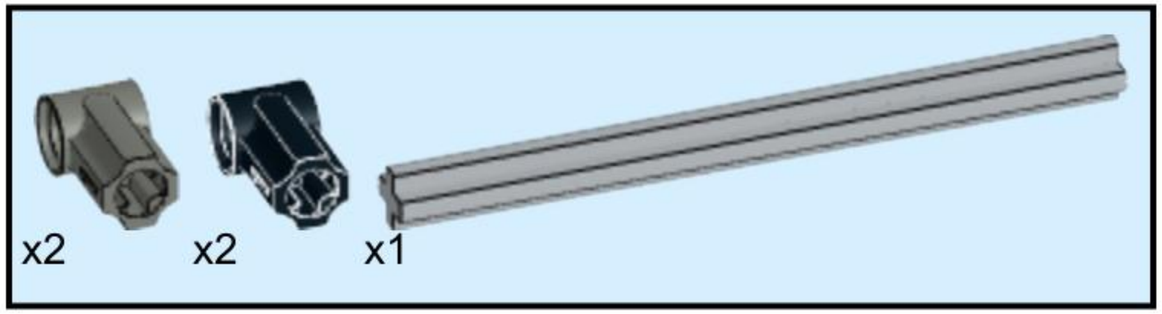

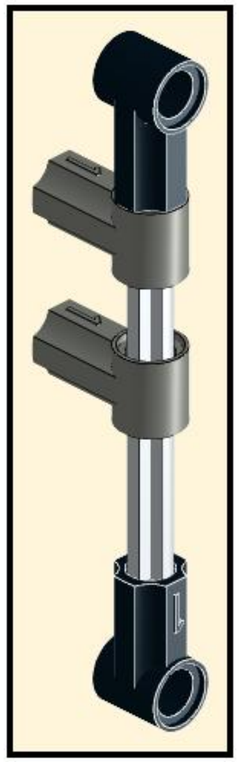

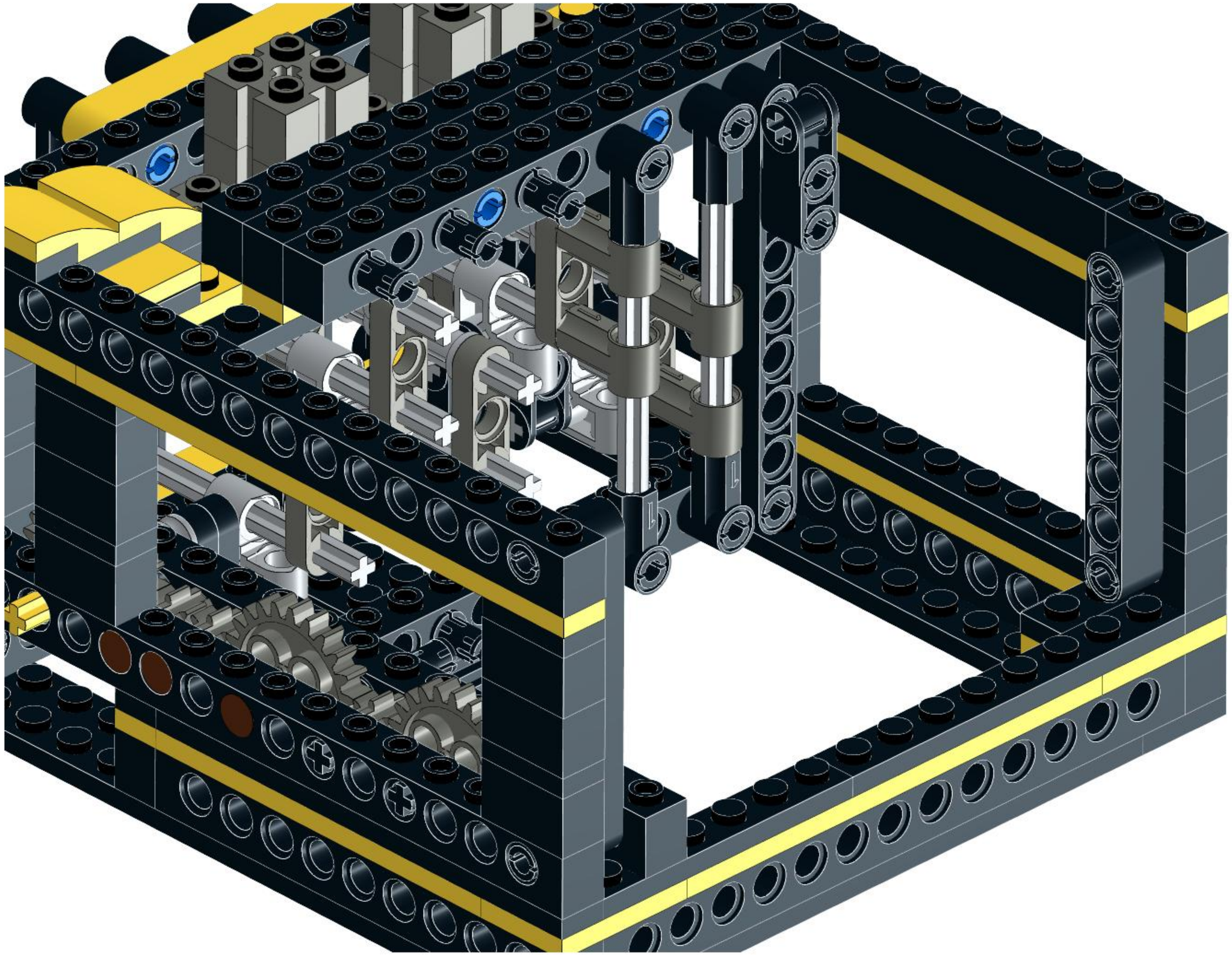

65

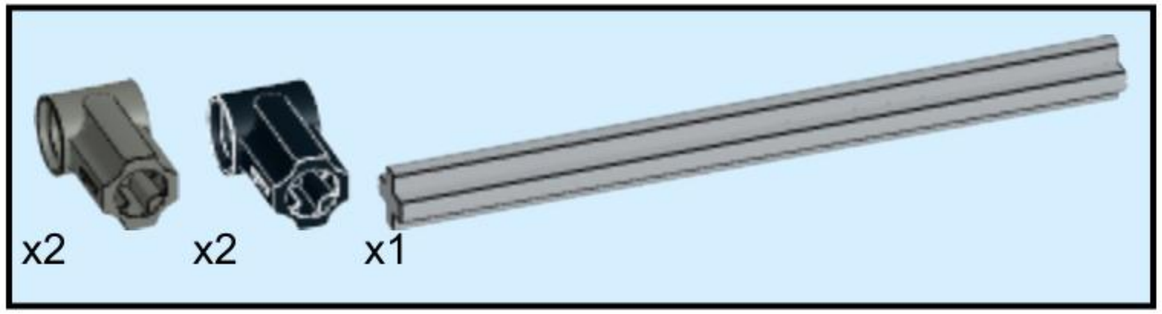

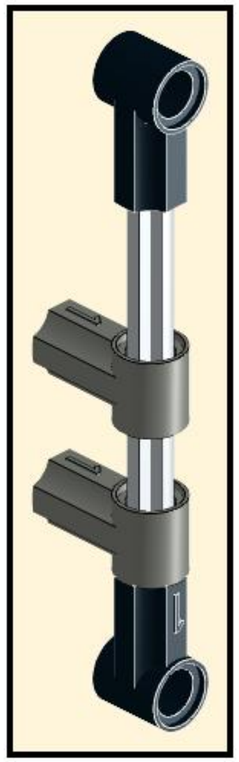

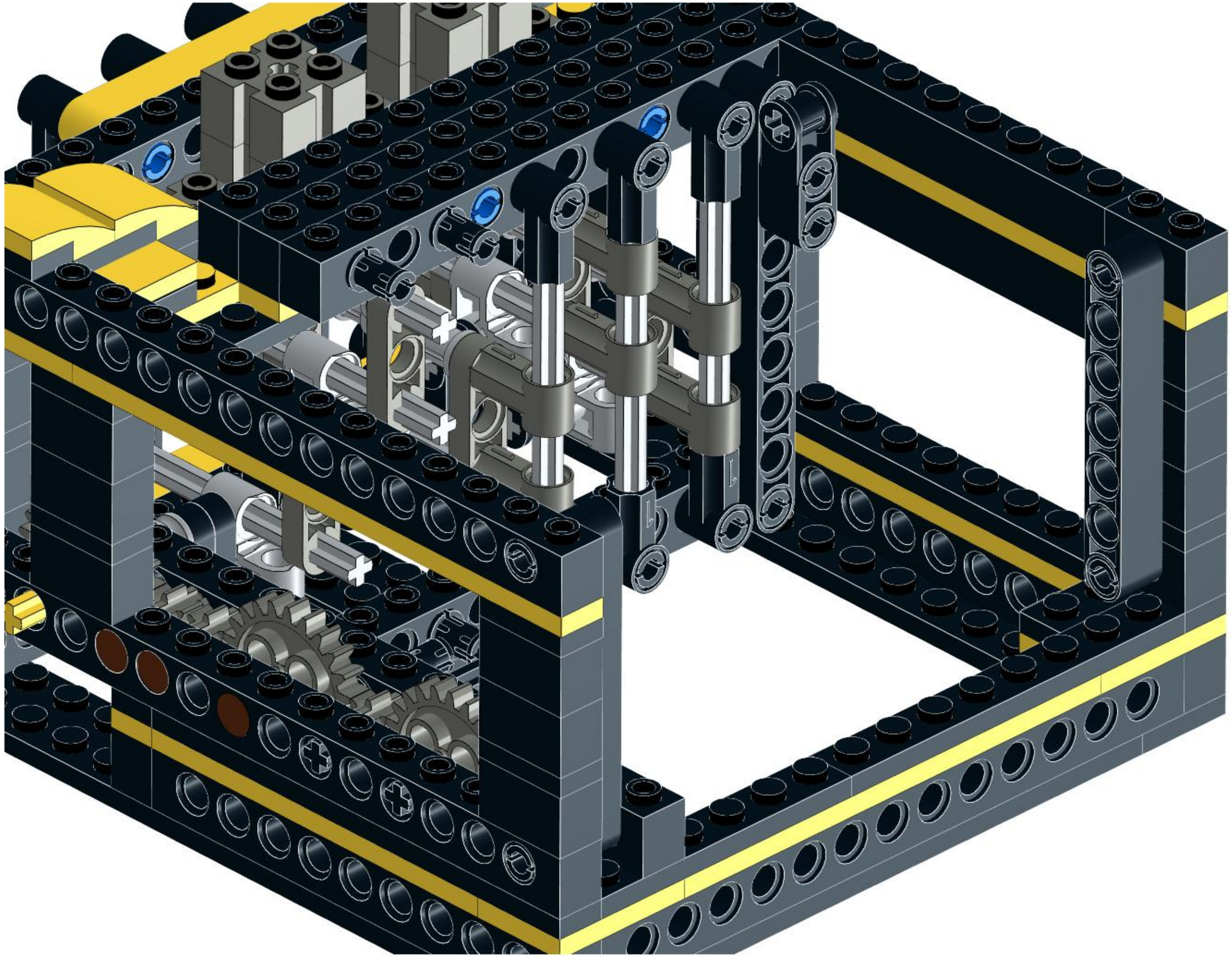

67

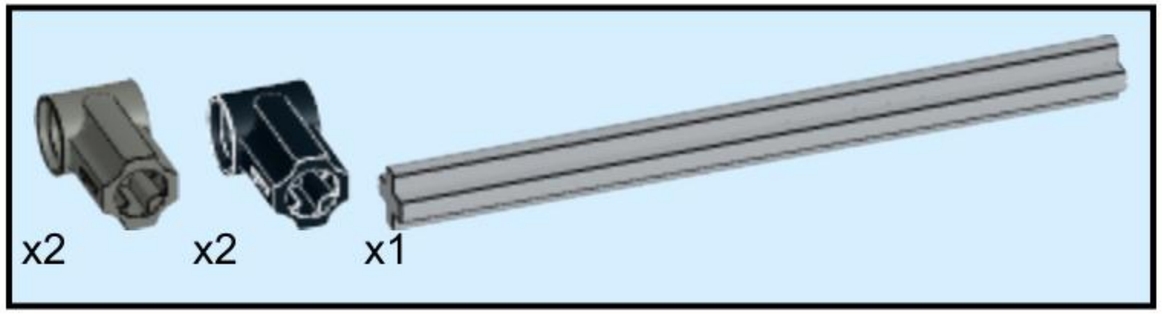

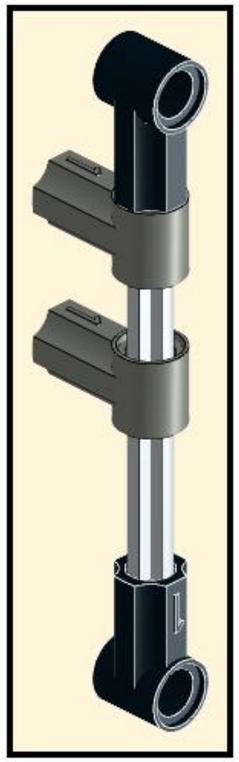

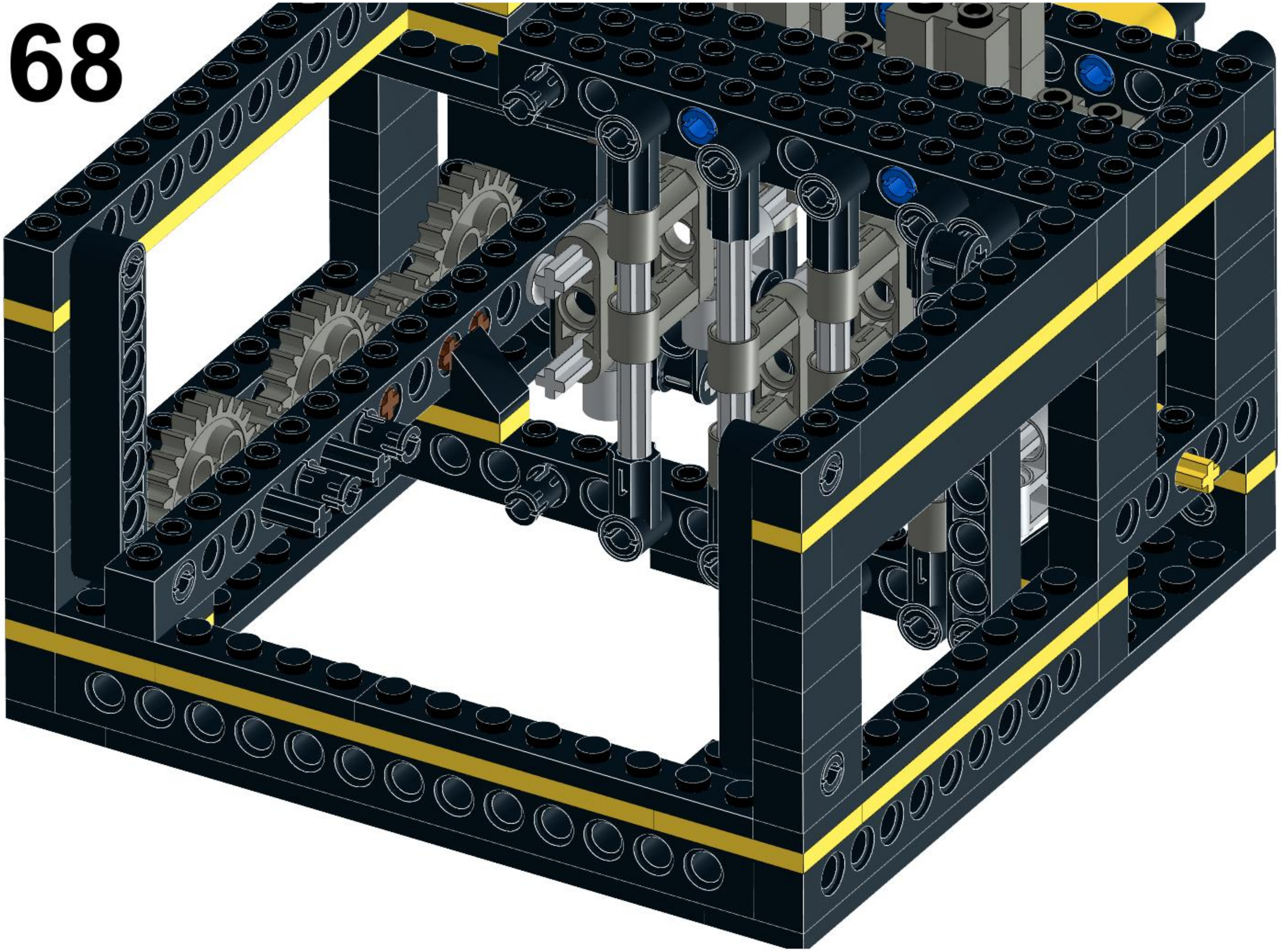

69

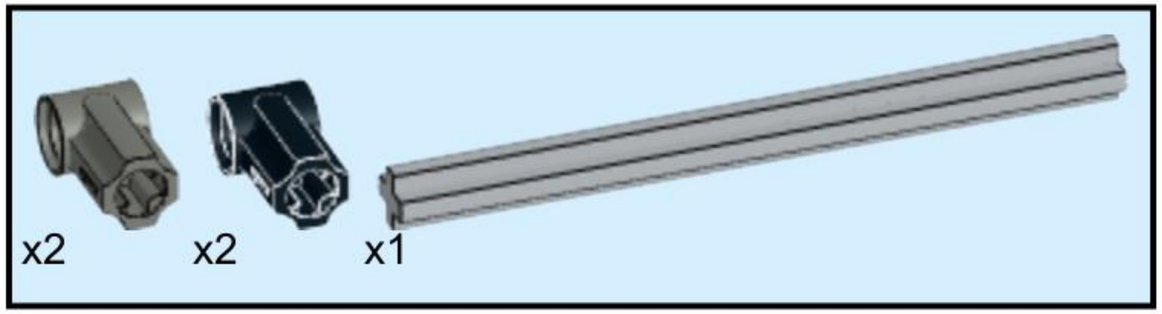

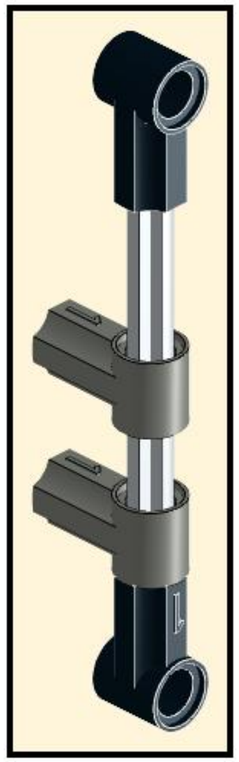

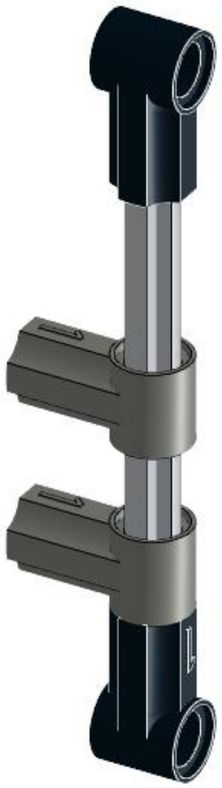

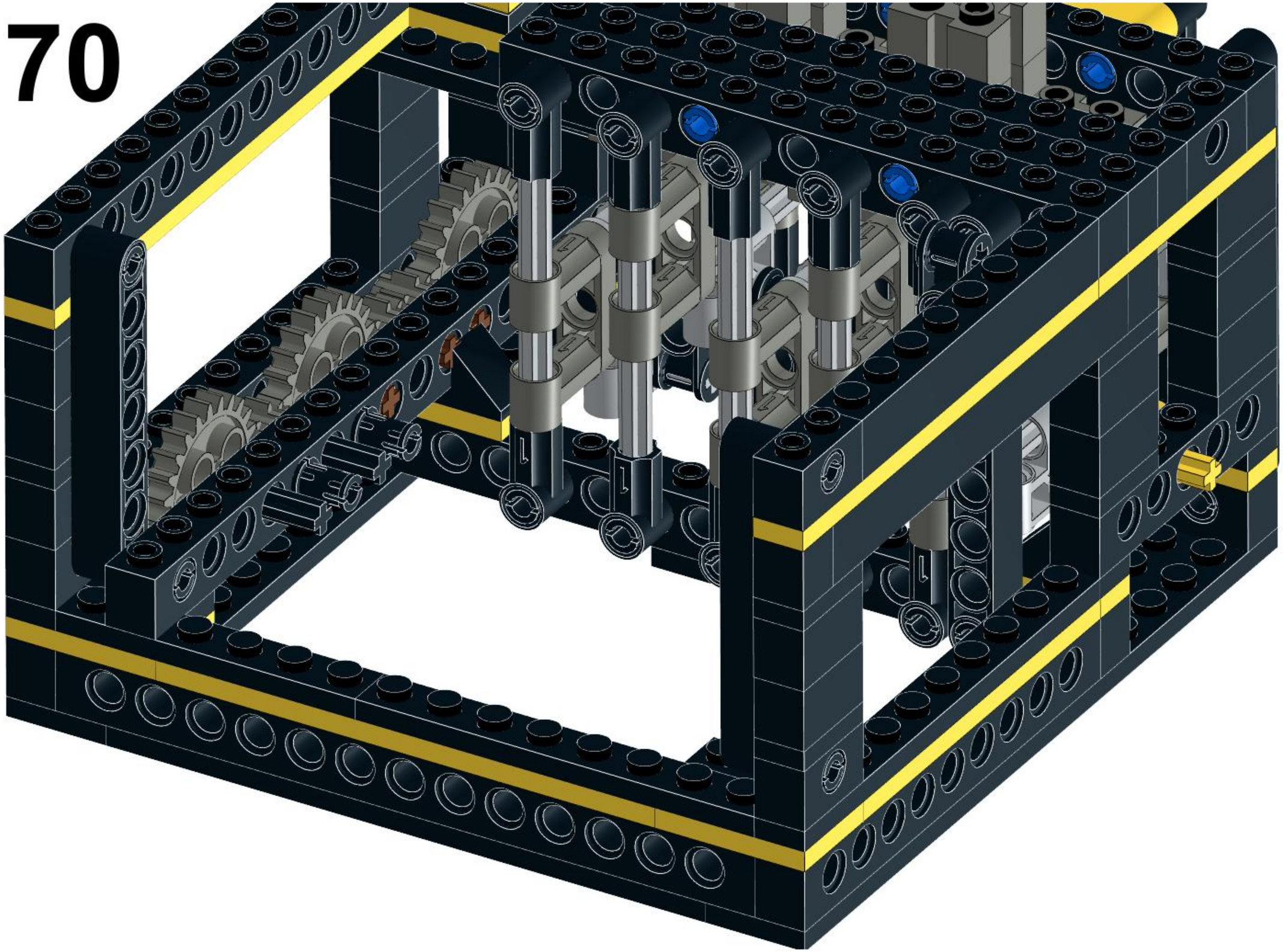

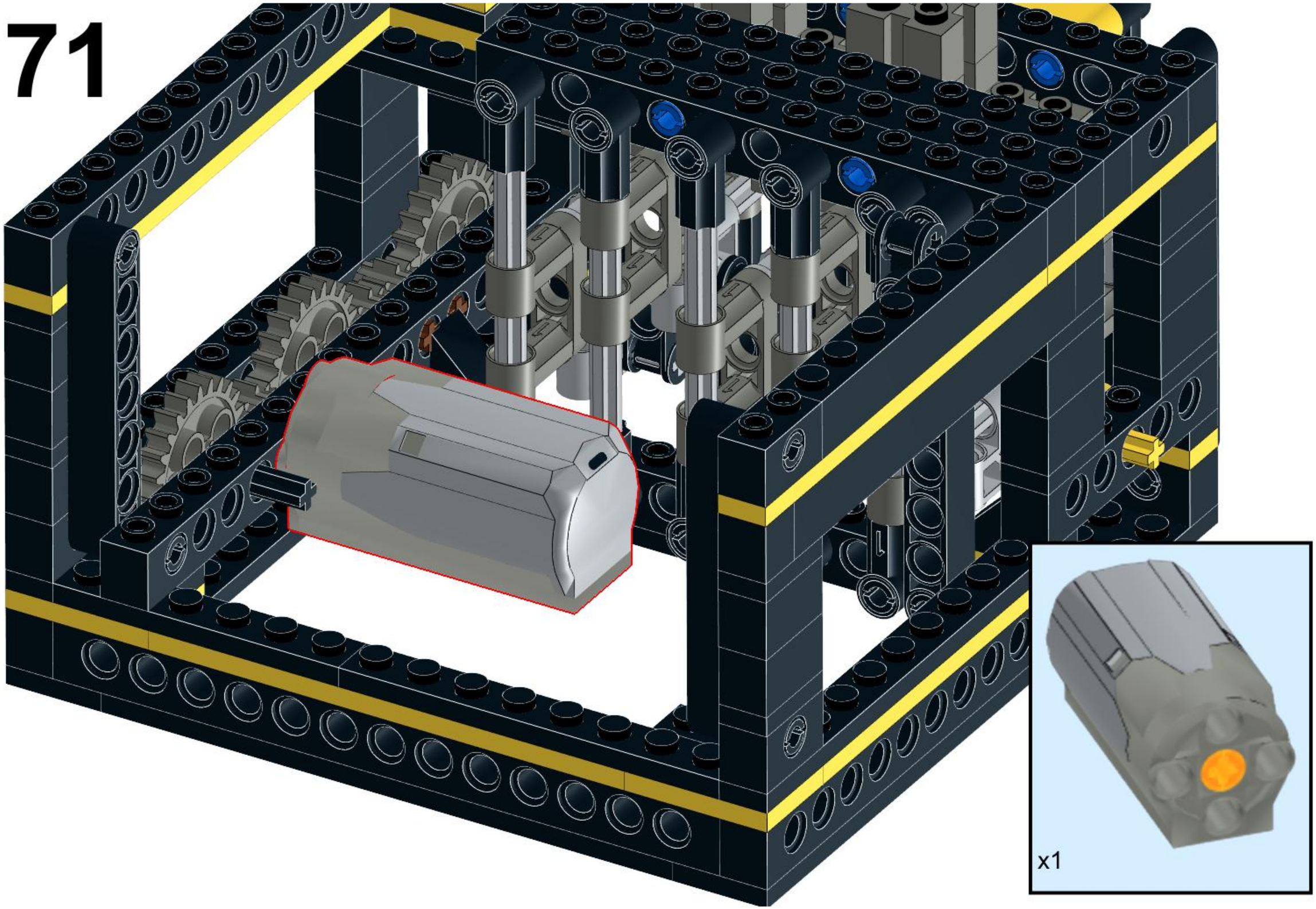
x1

72

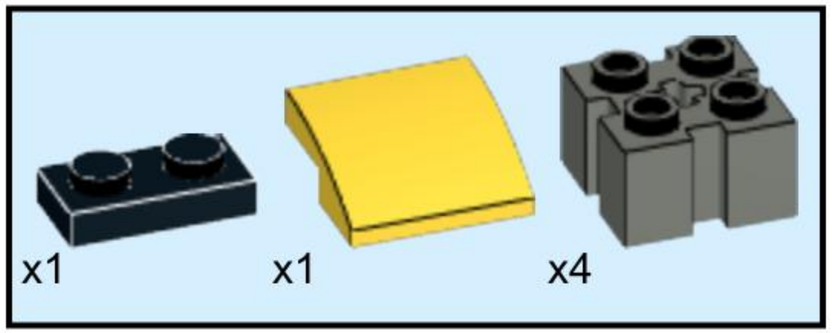

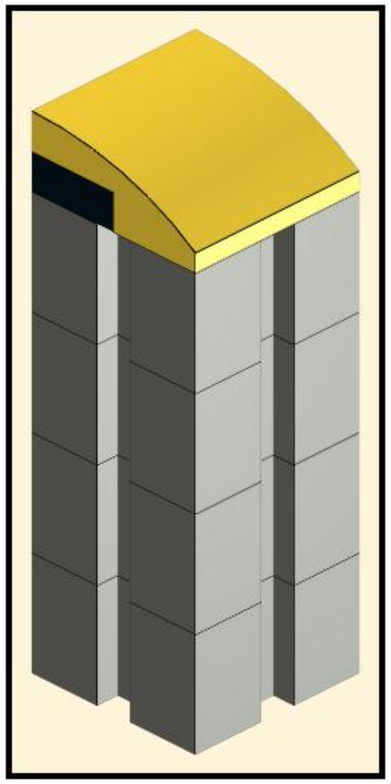

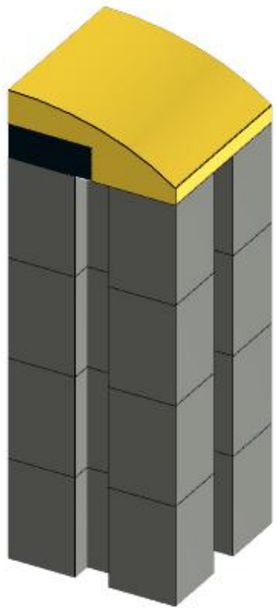

73

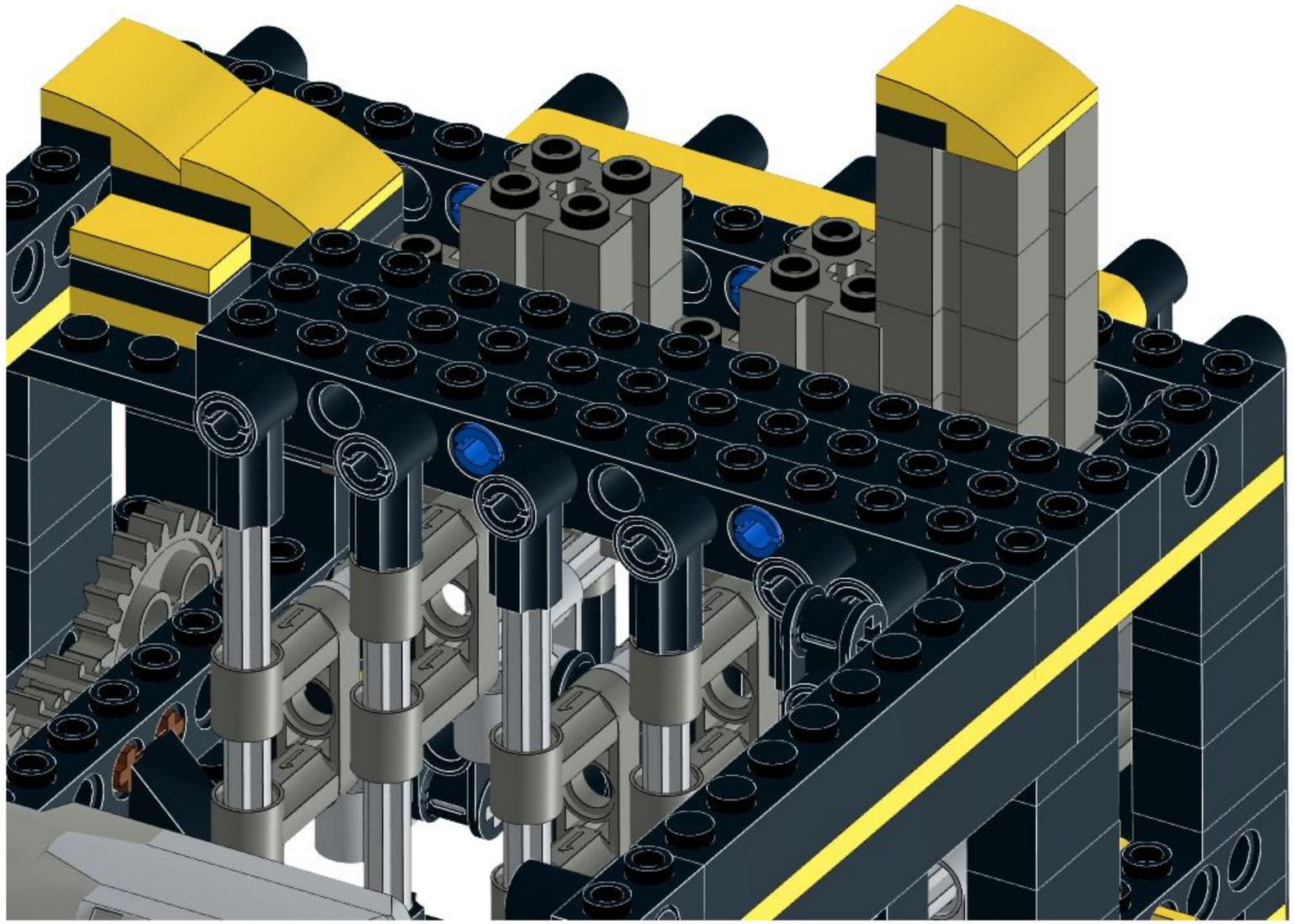

74

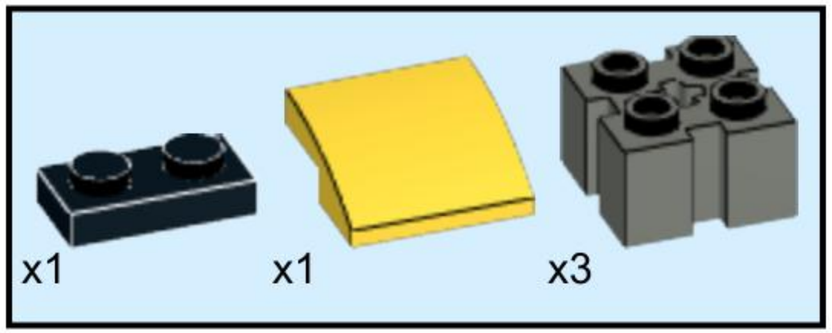

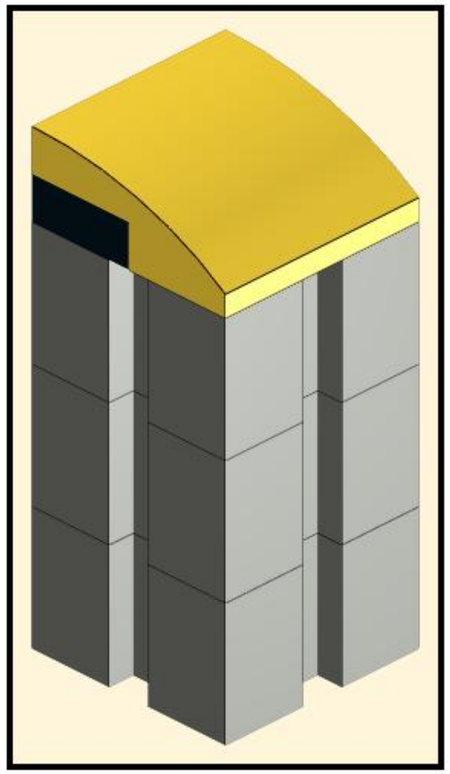

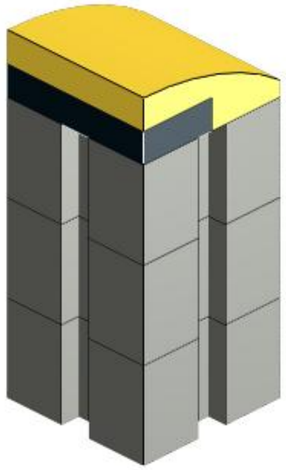

75

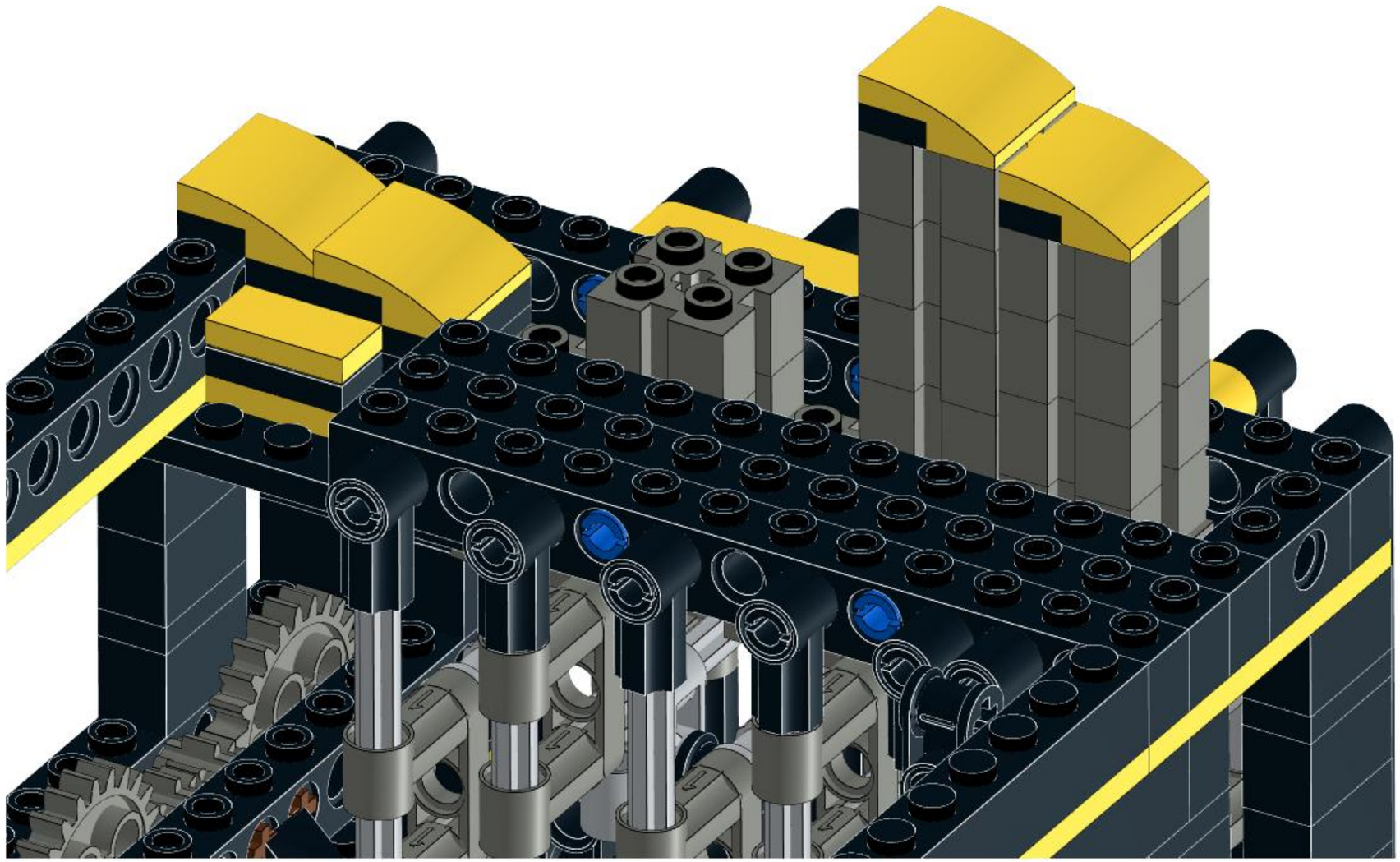

76

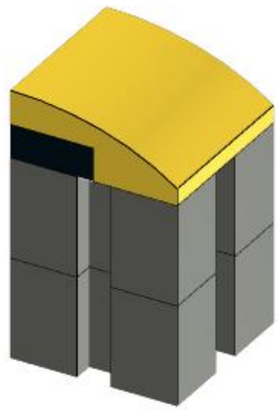

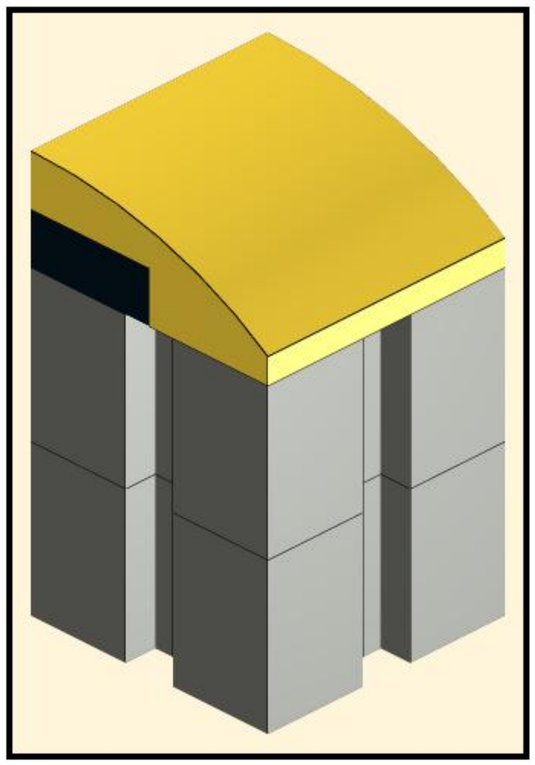

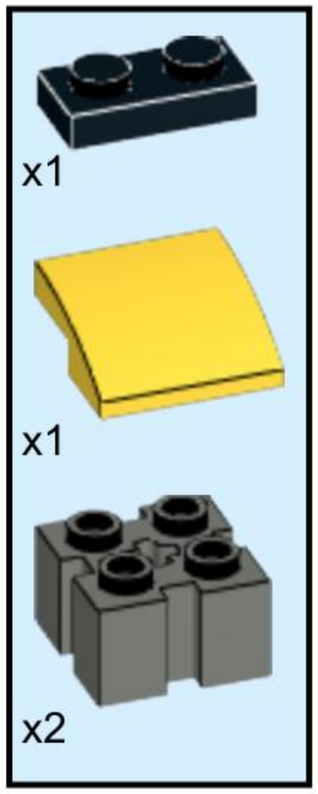

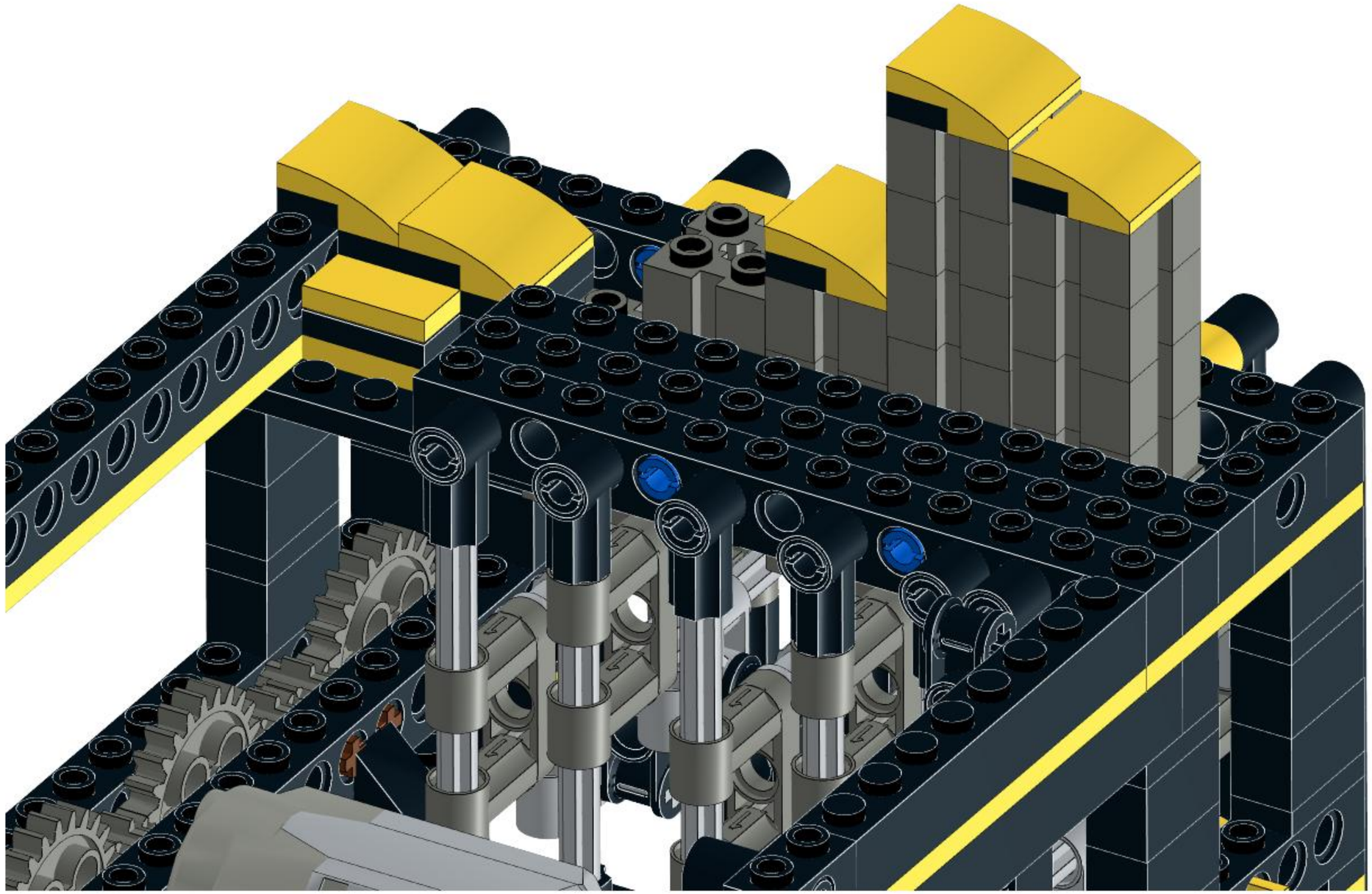

78

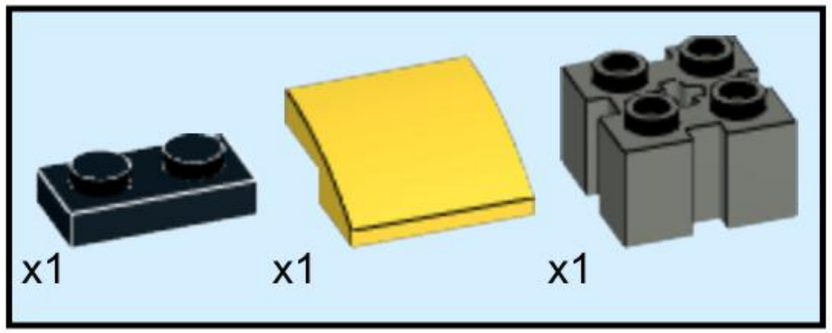

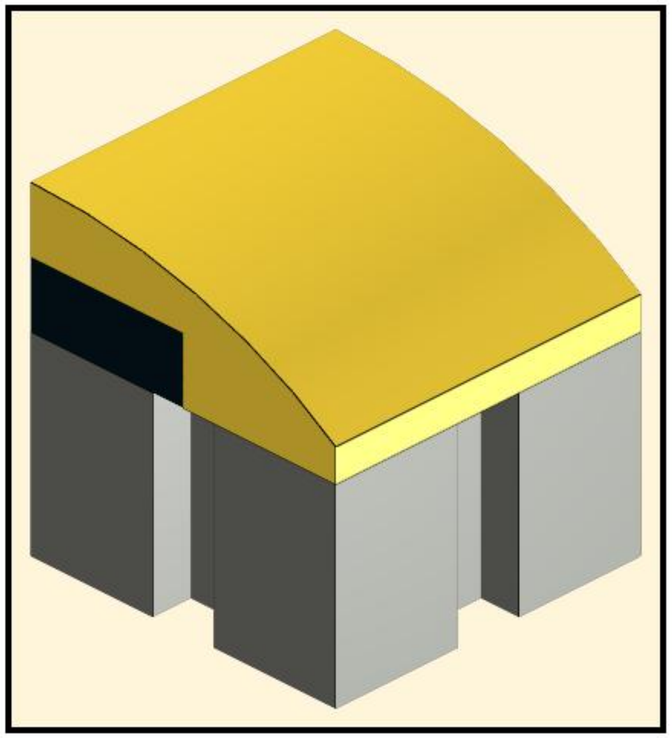

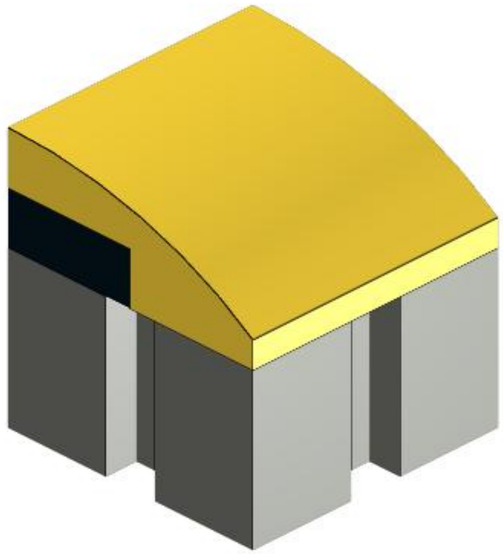

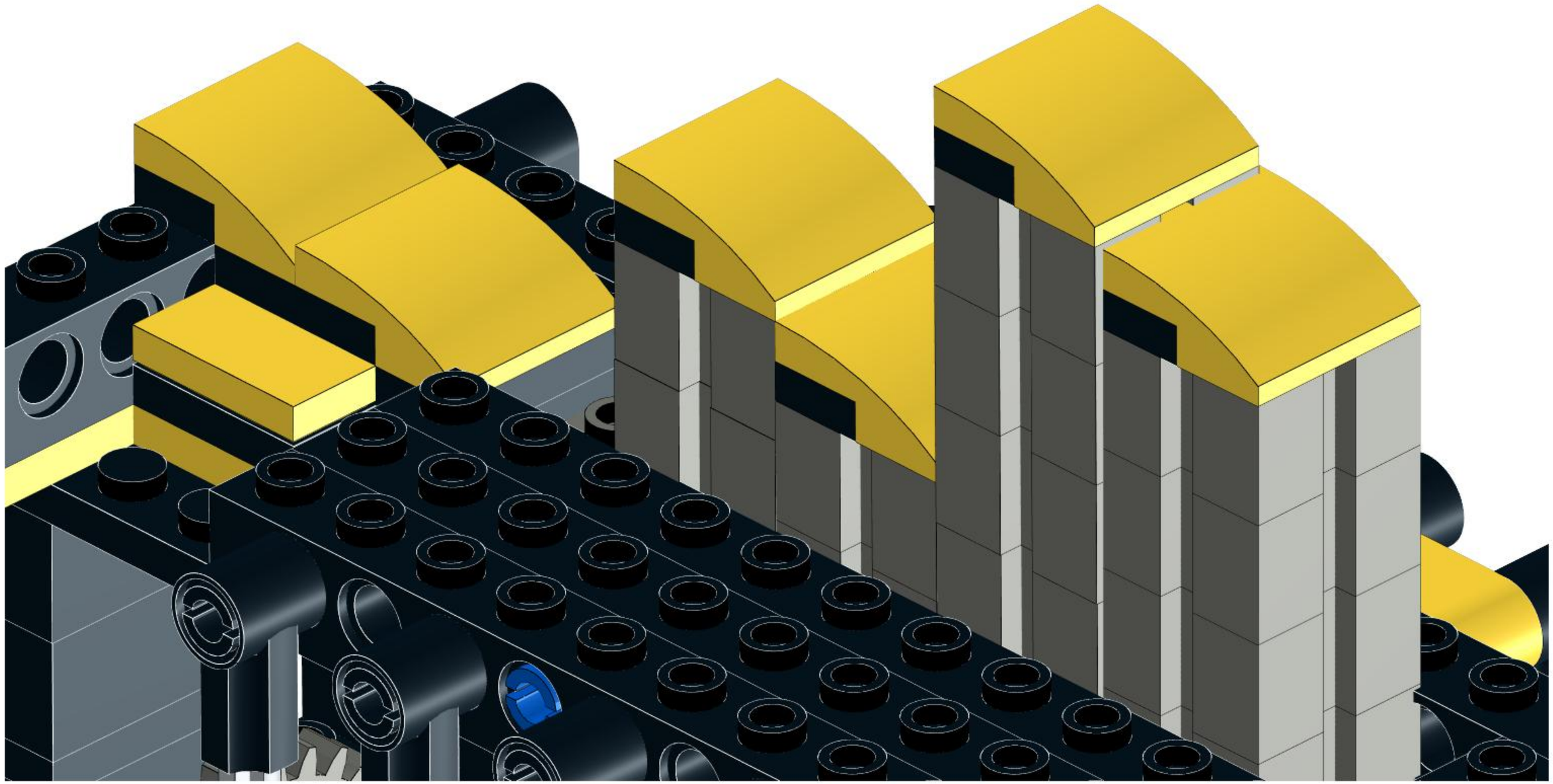

80

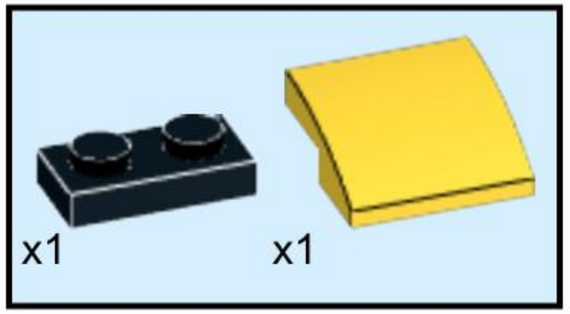

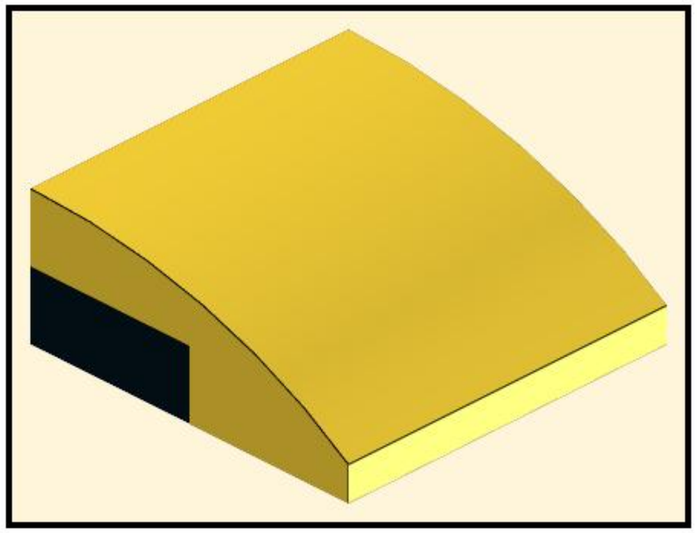

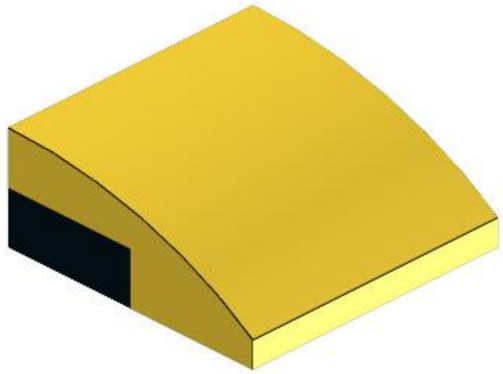

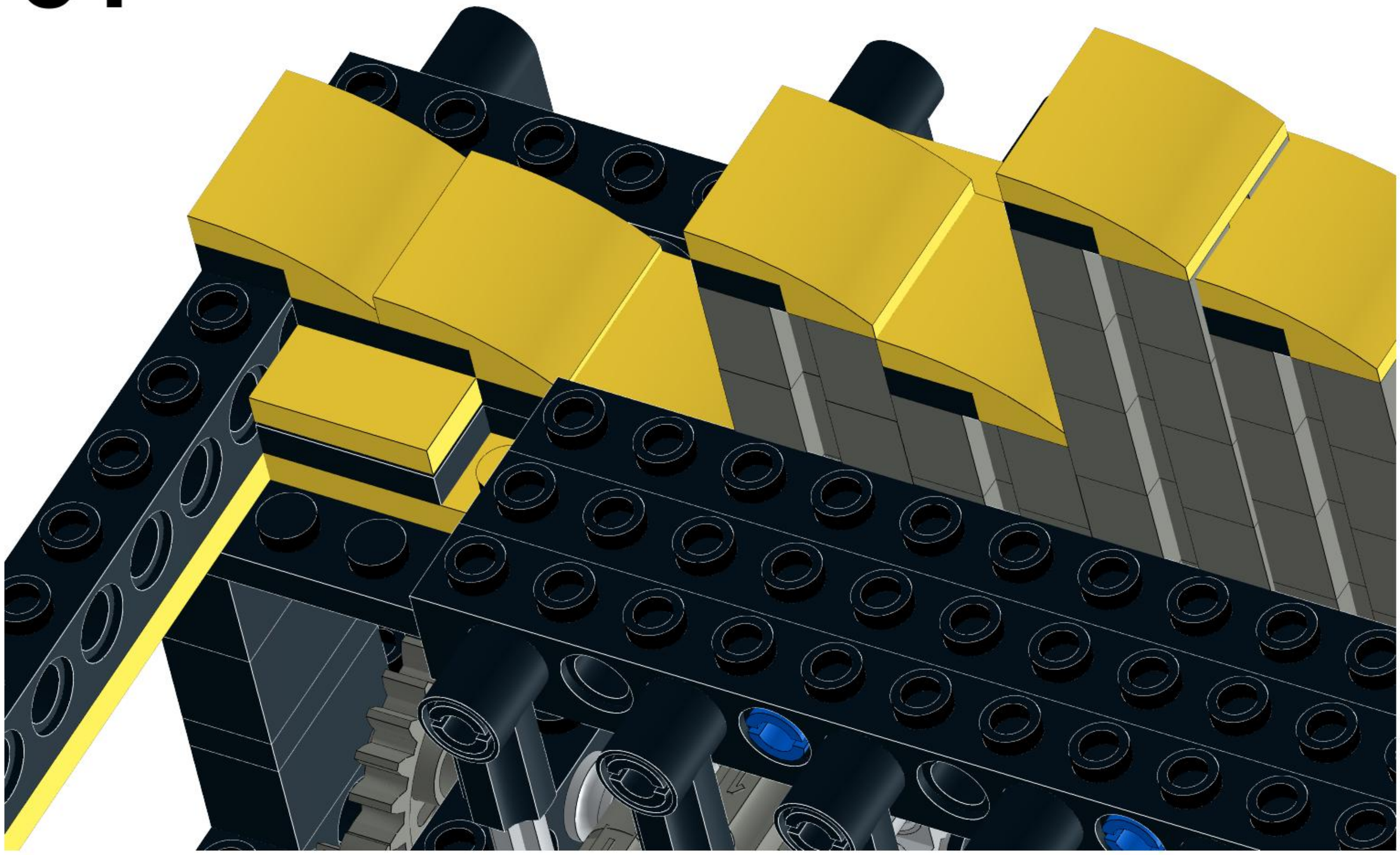

82

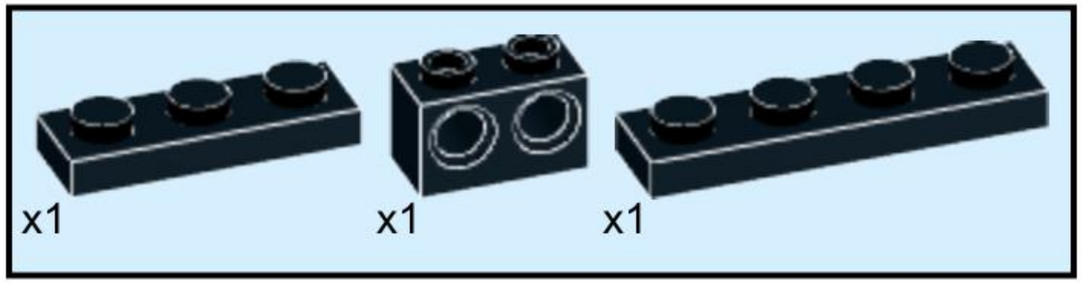

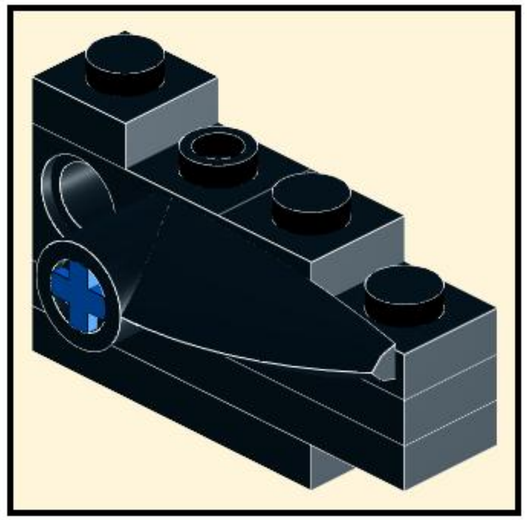

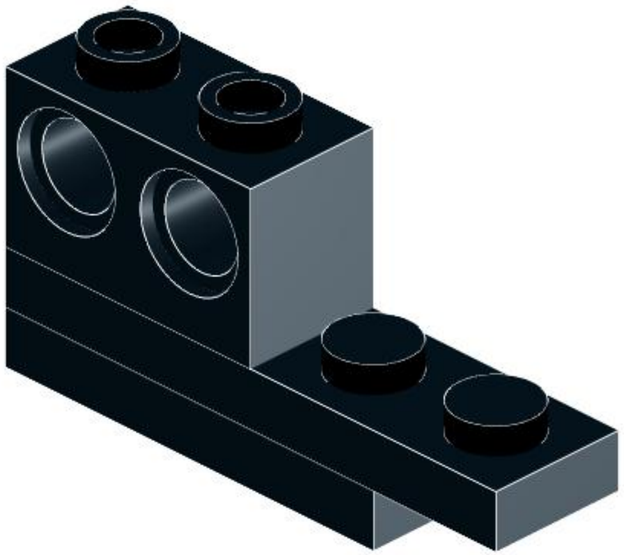

83

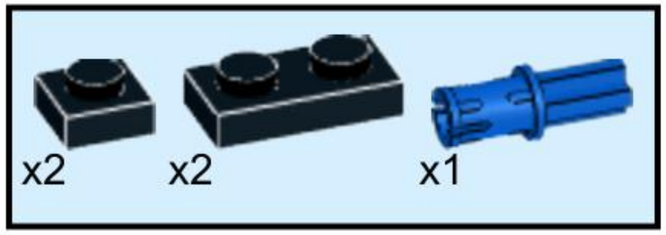

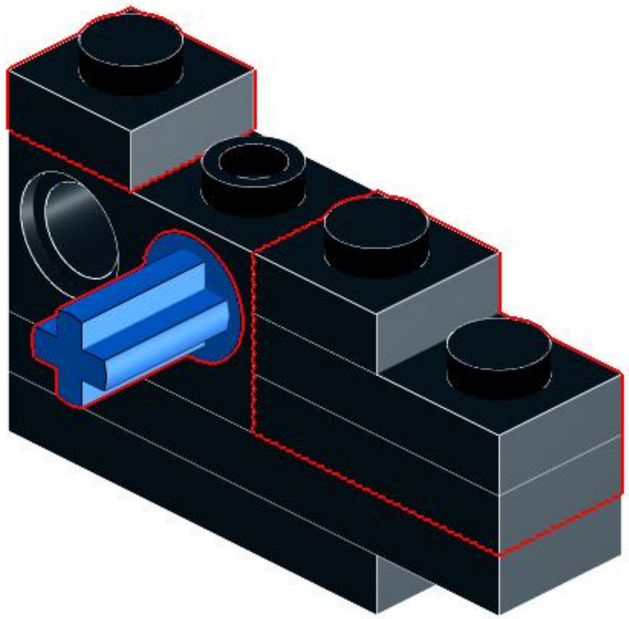

84

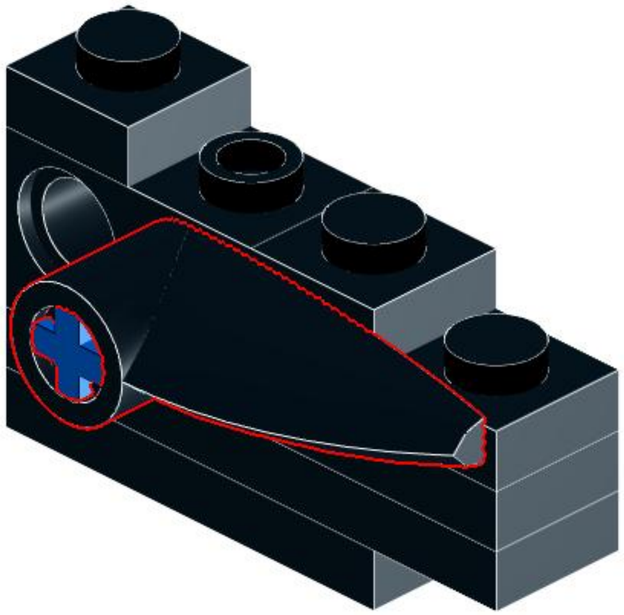

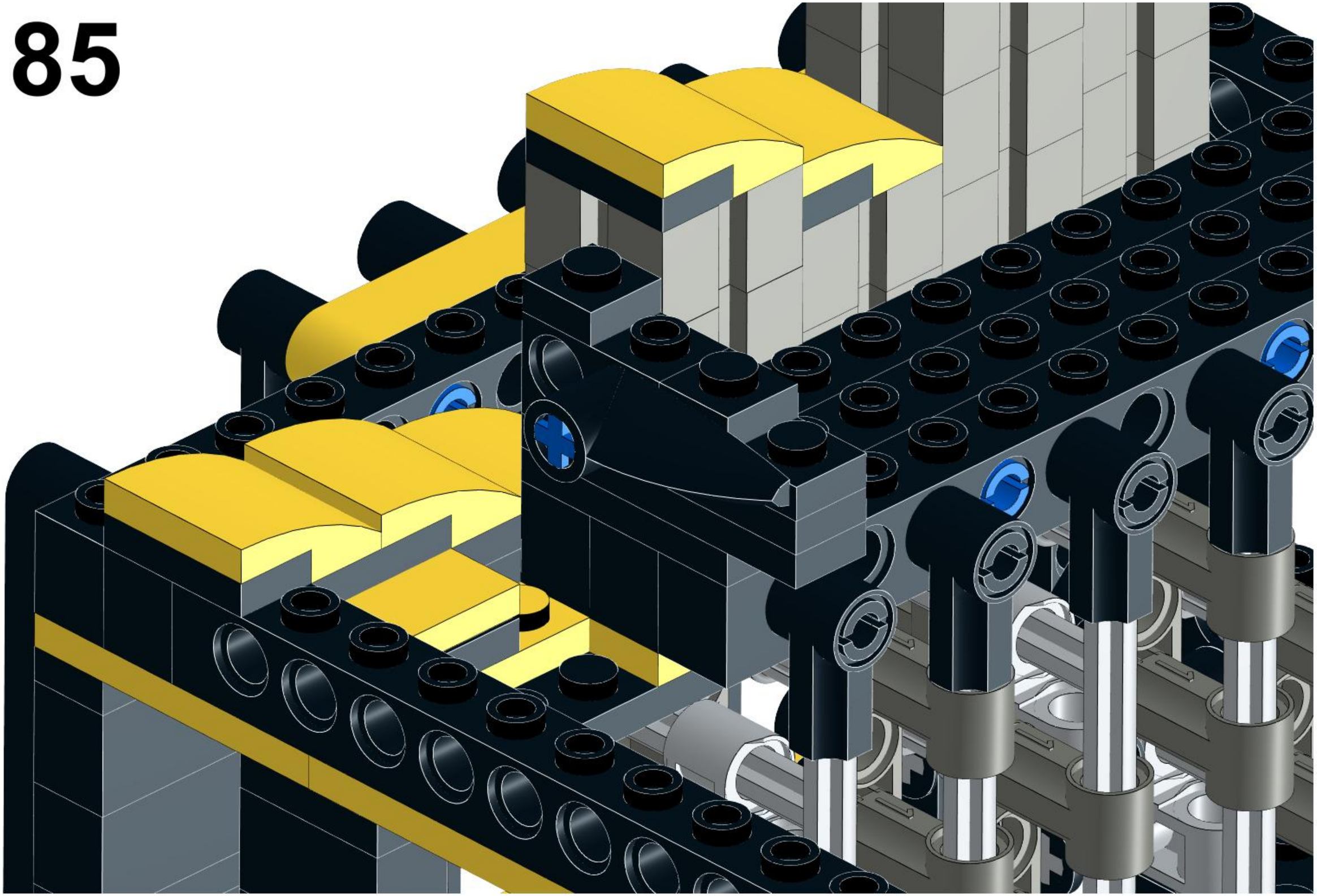

86

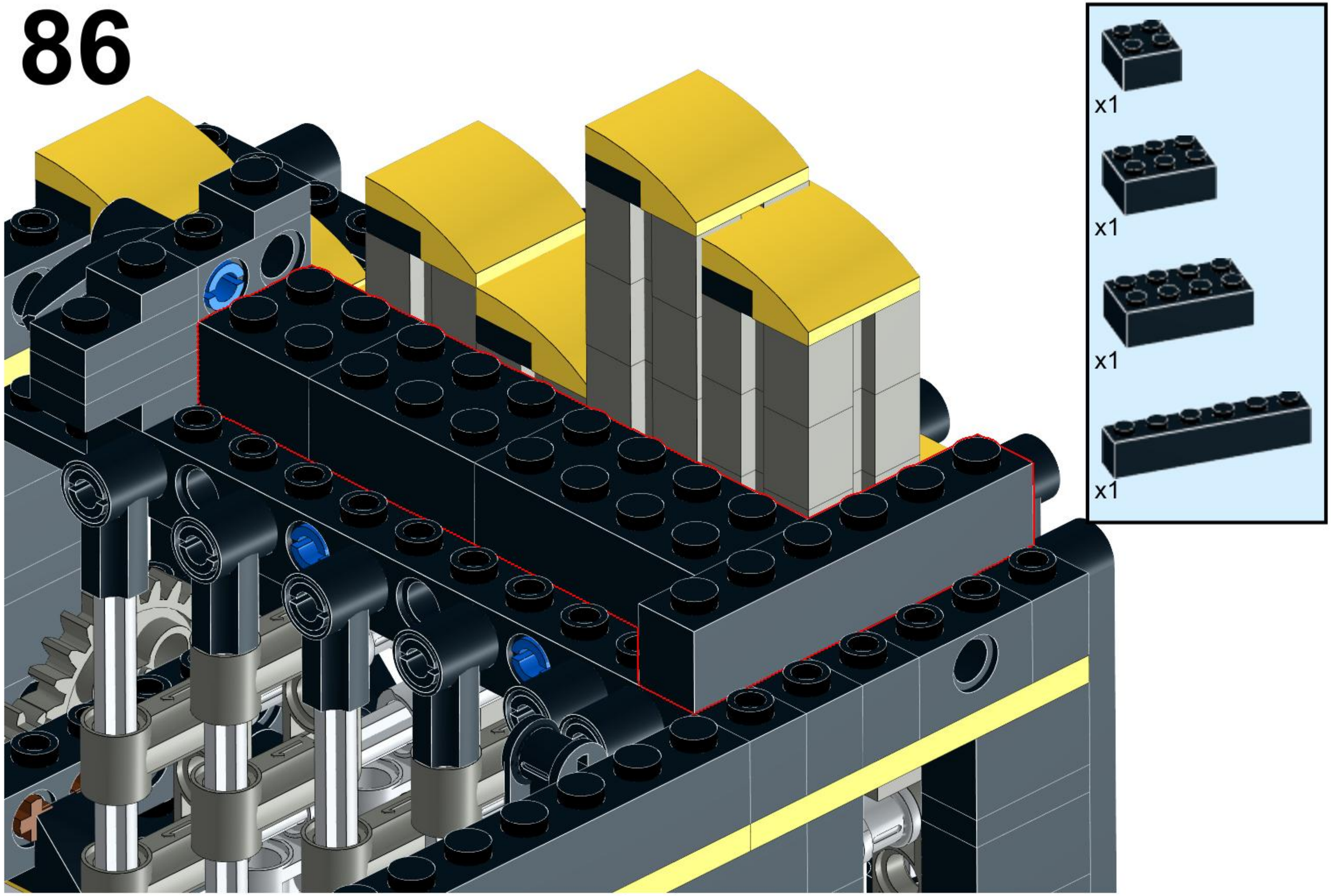

87

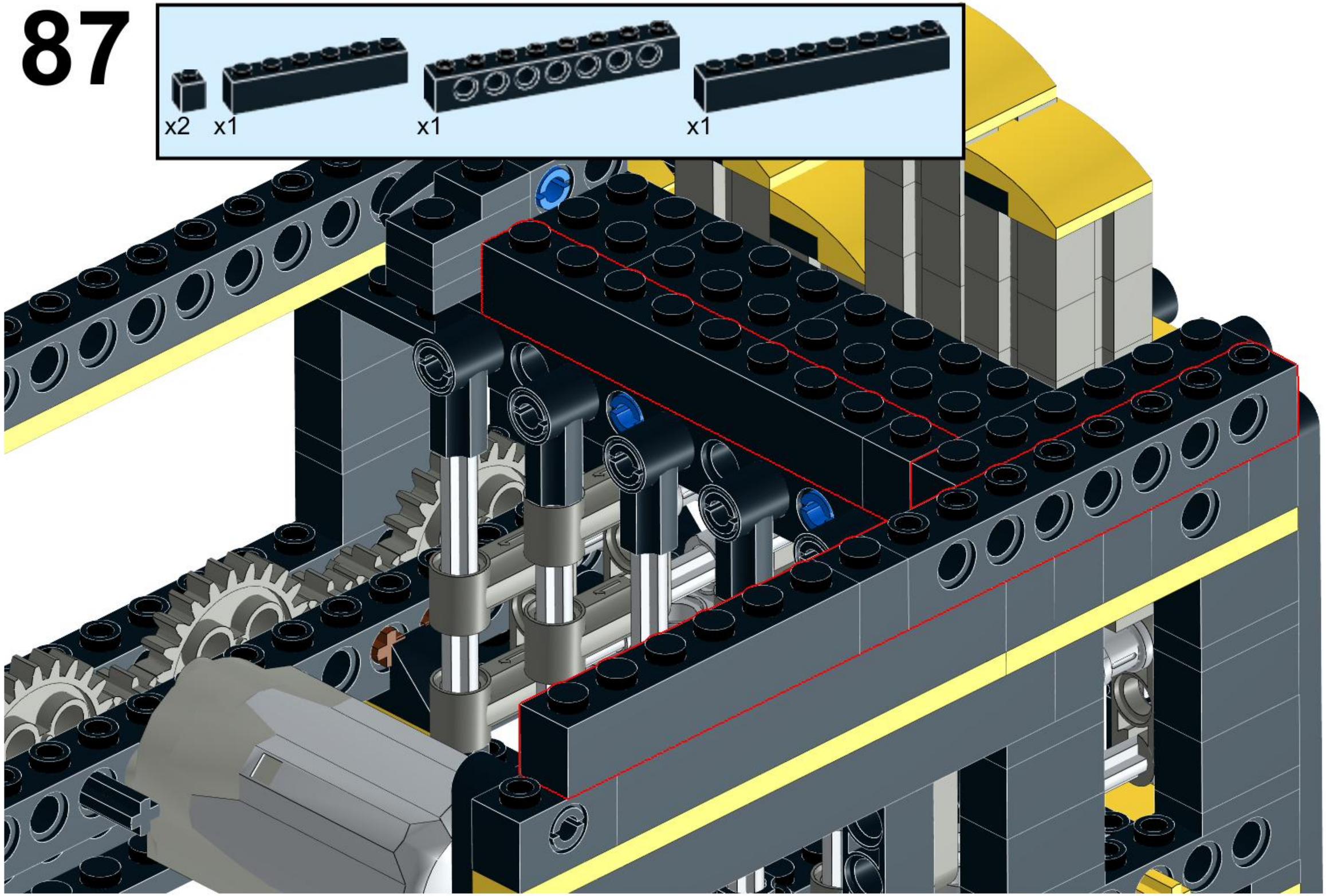

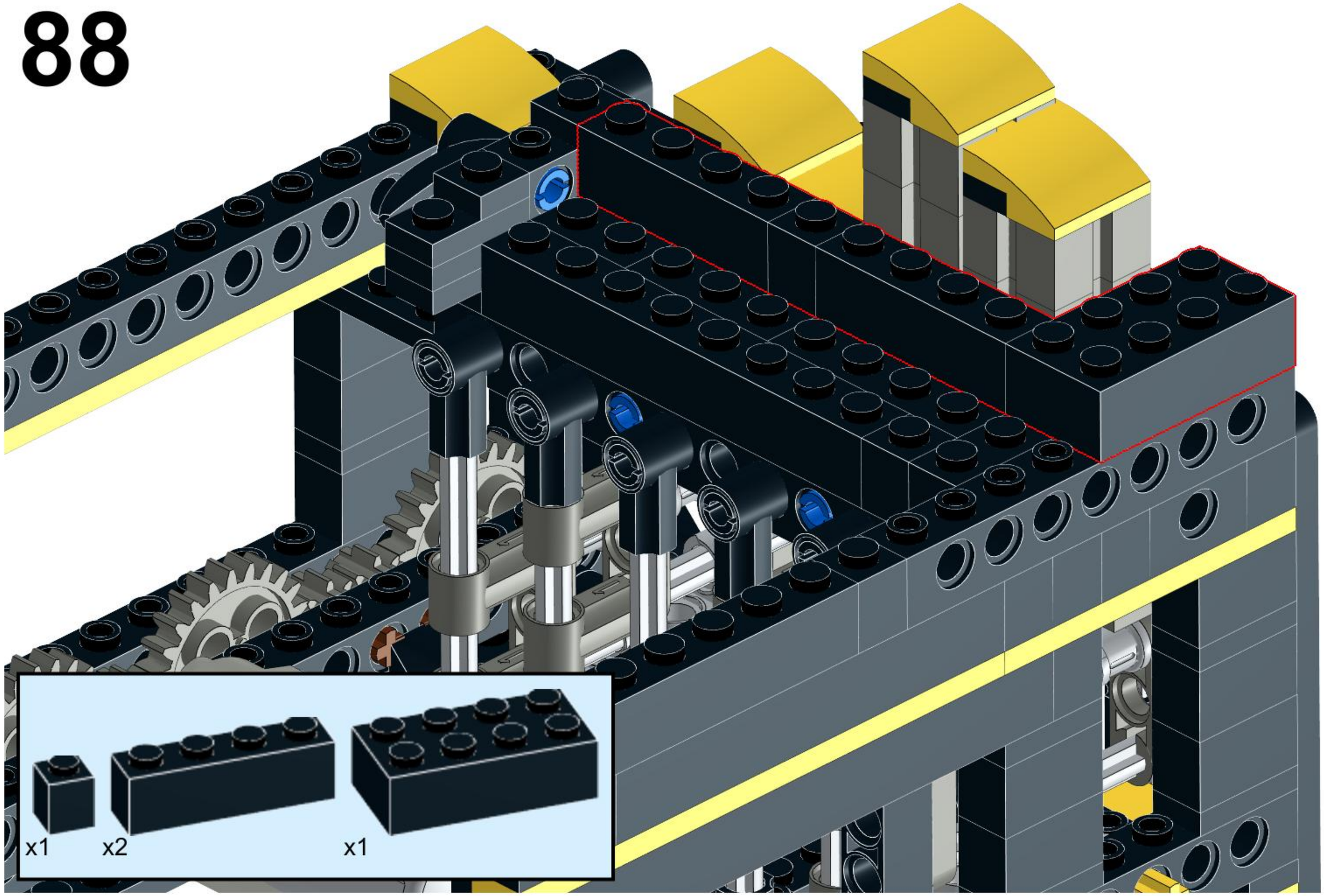
x1
x2
x1

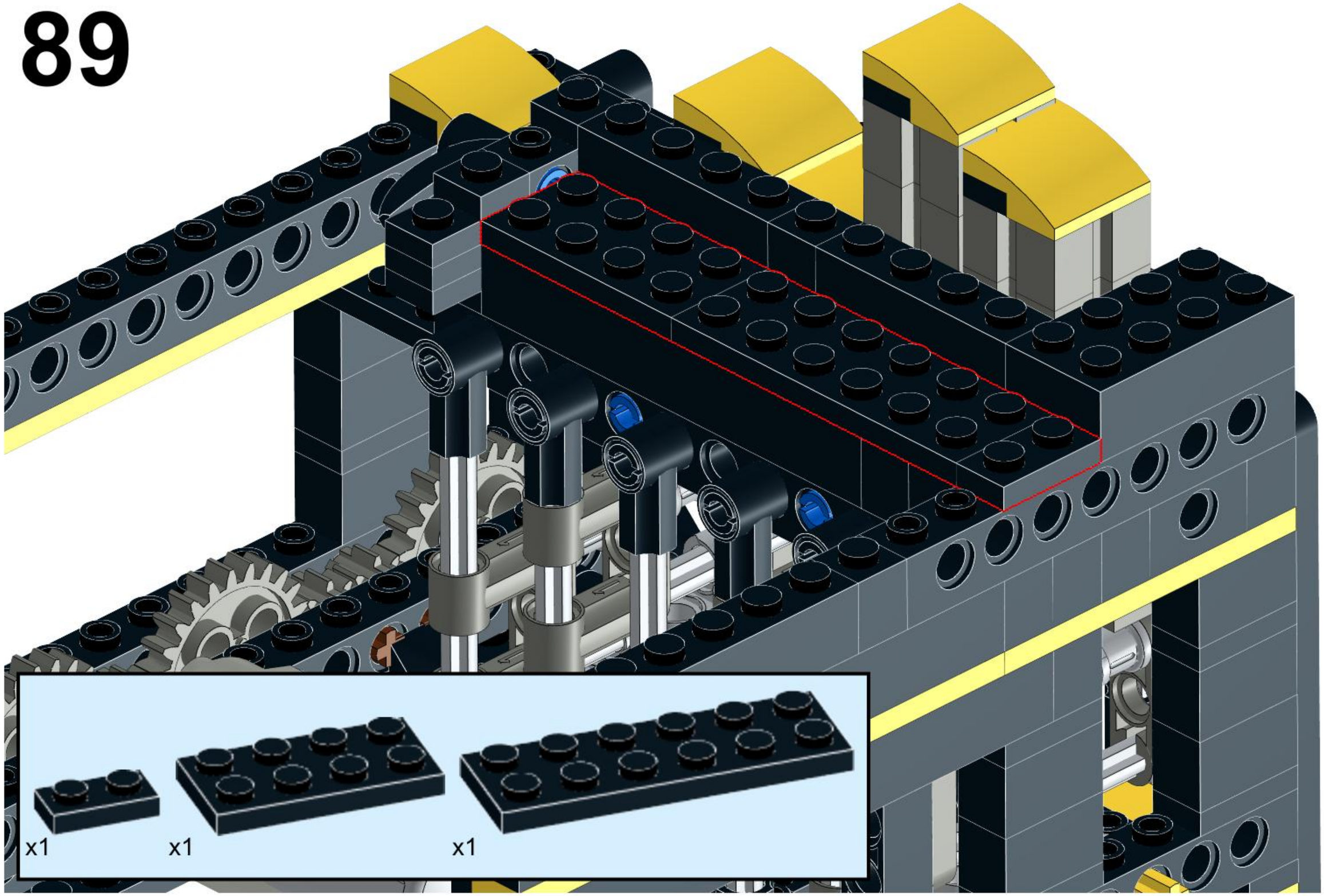
x1
x1
x1

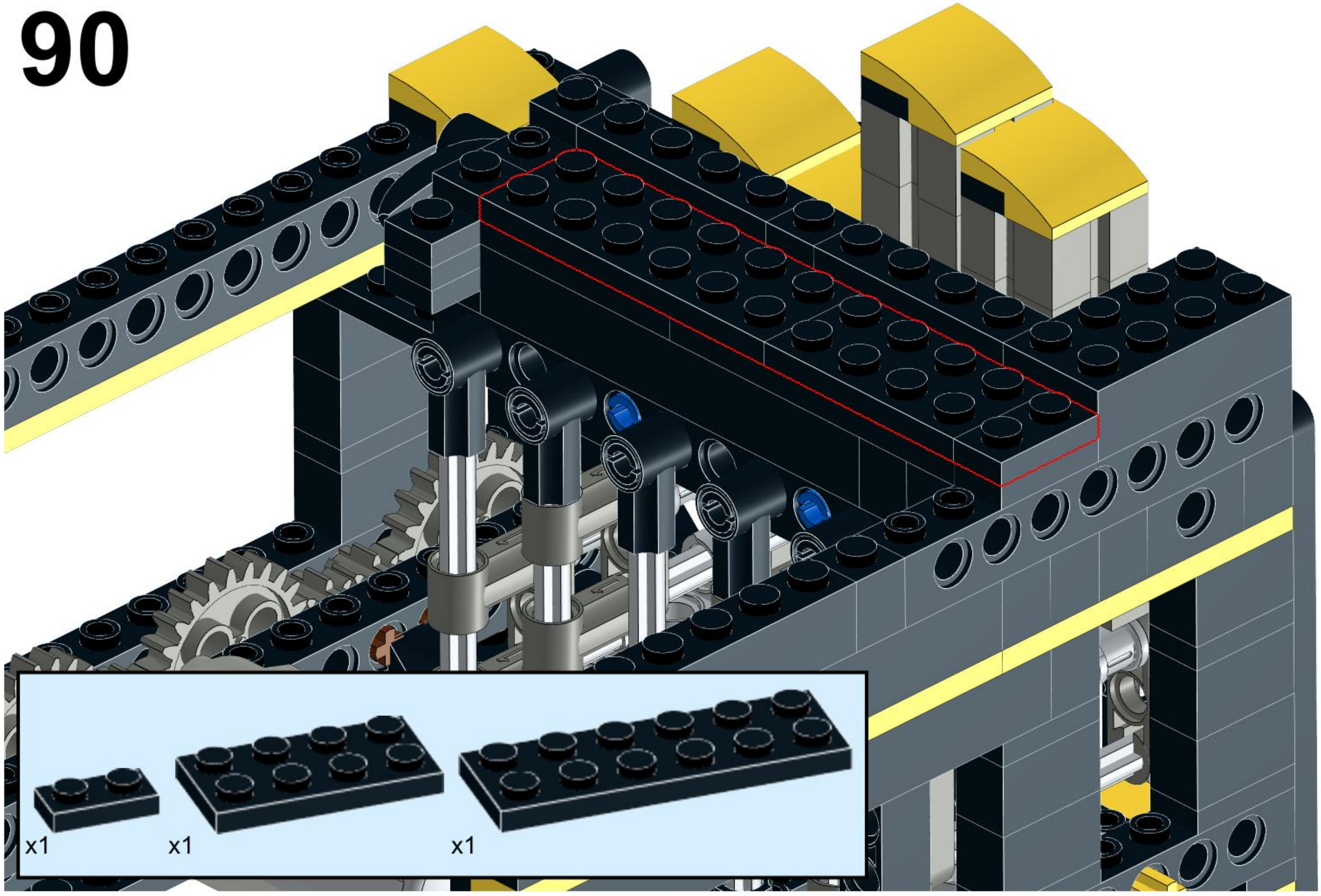
x1
x1
x1

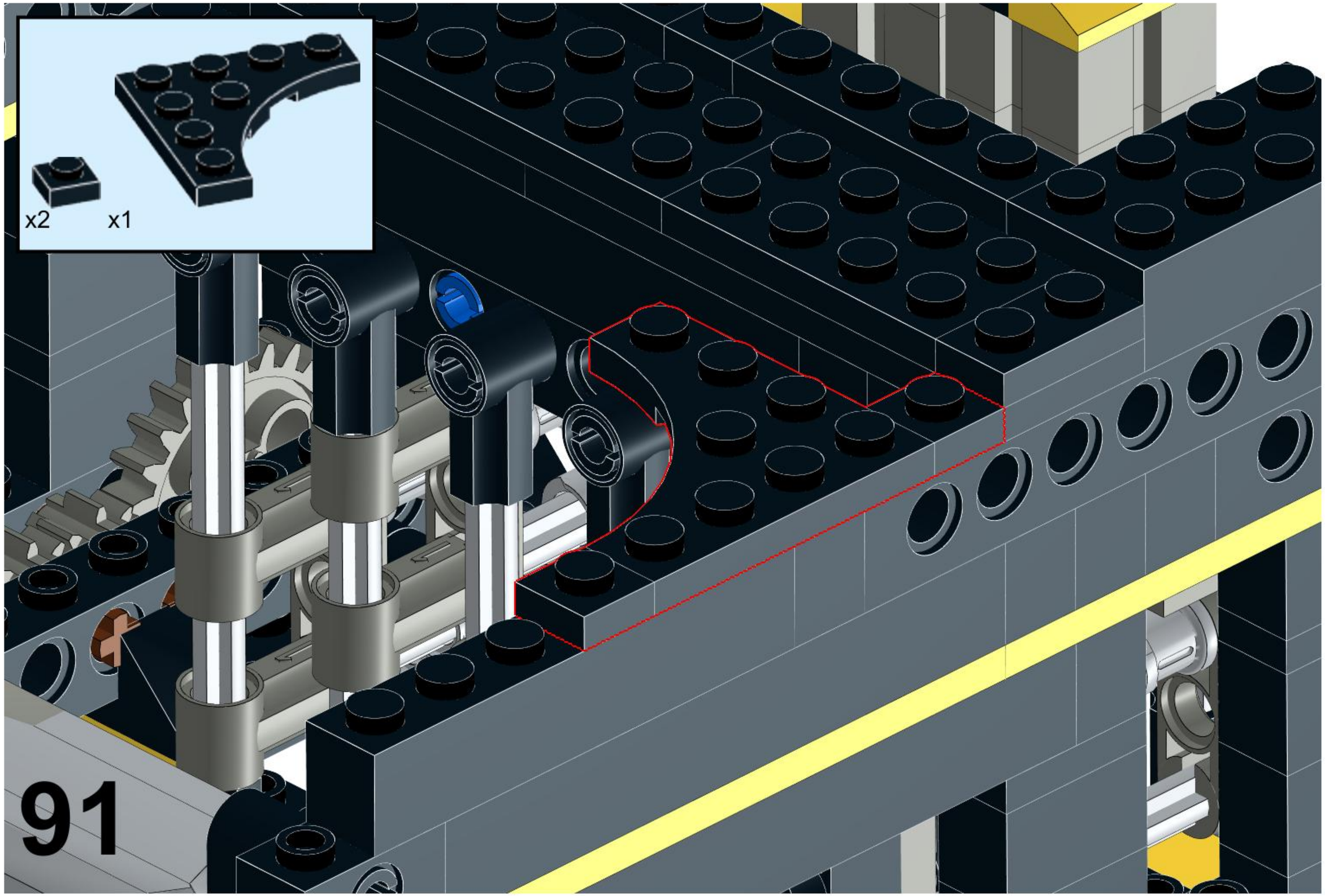
x2
x1
91

92

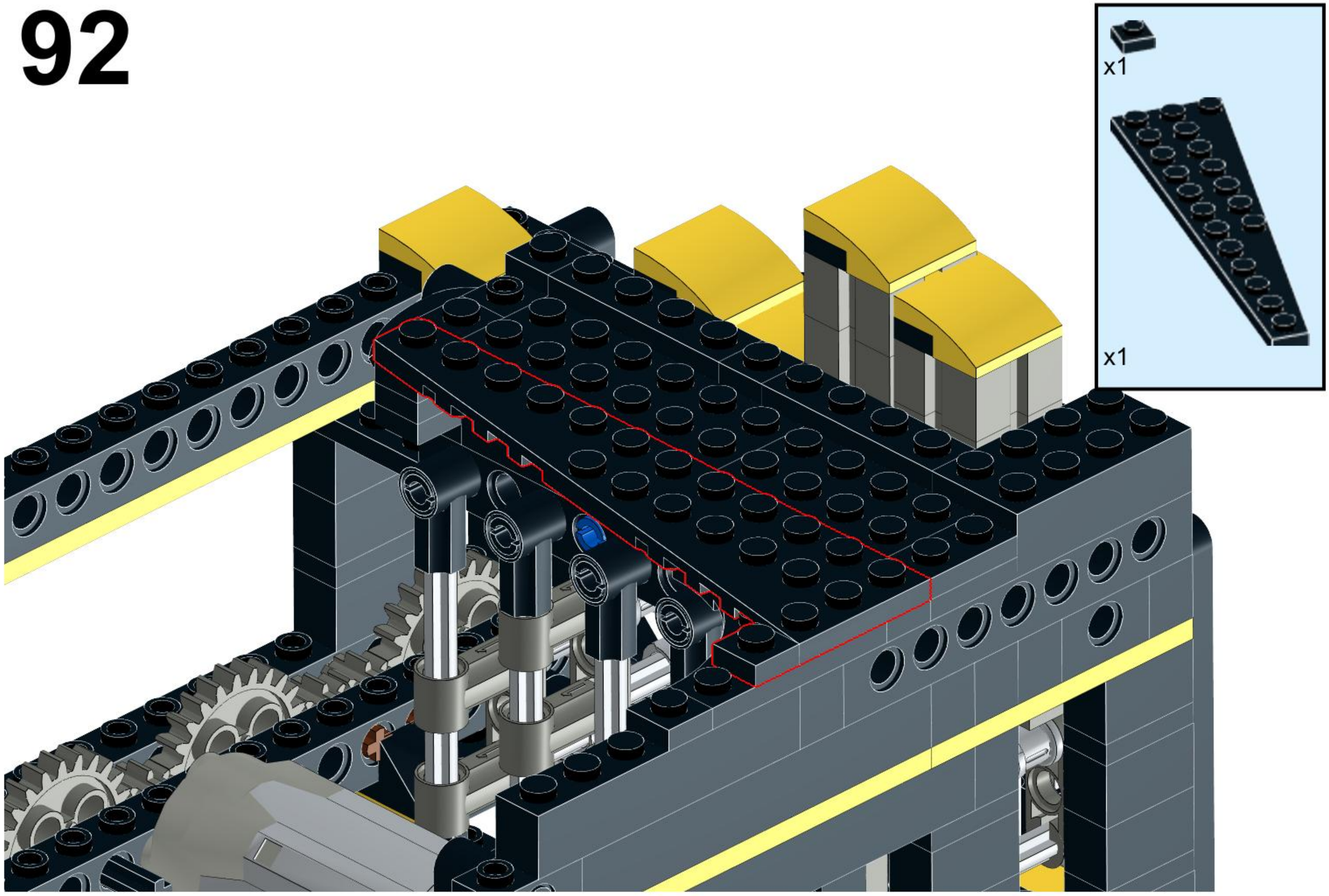

93

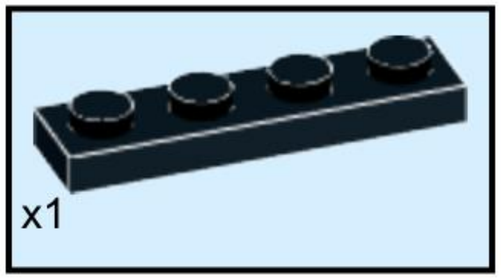

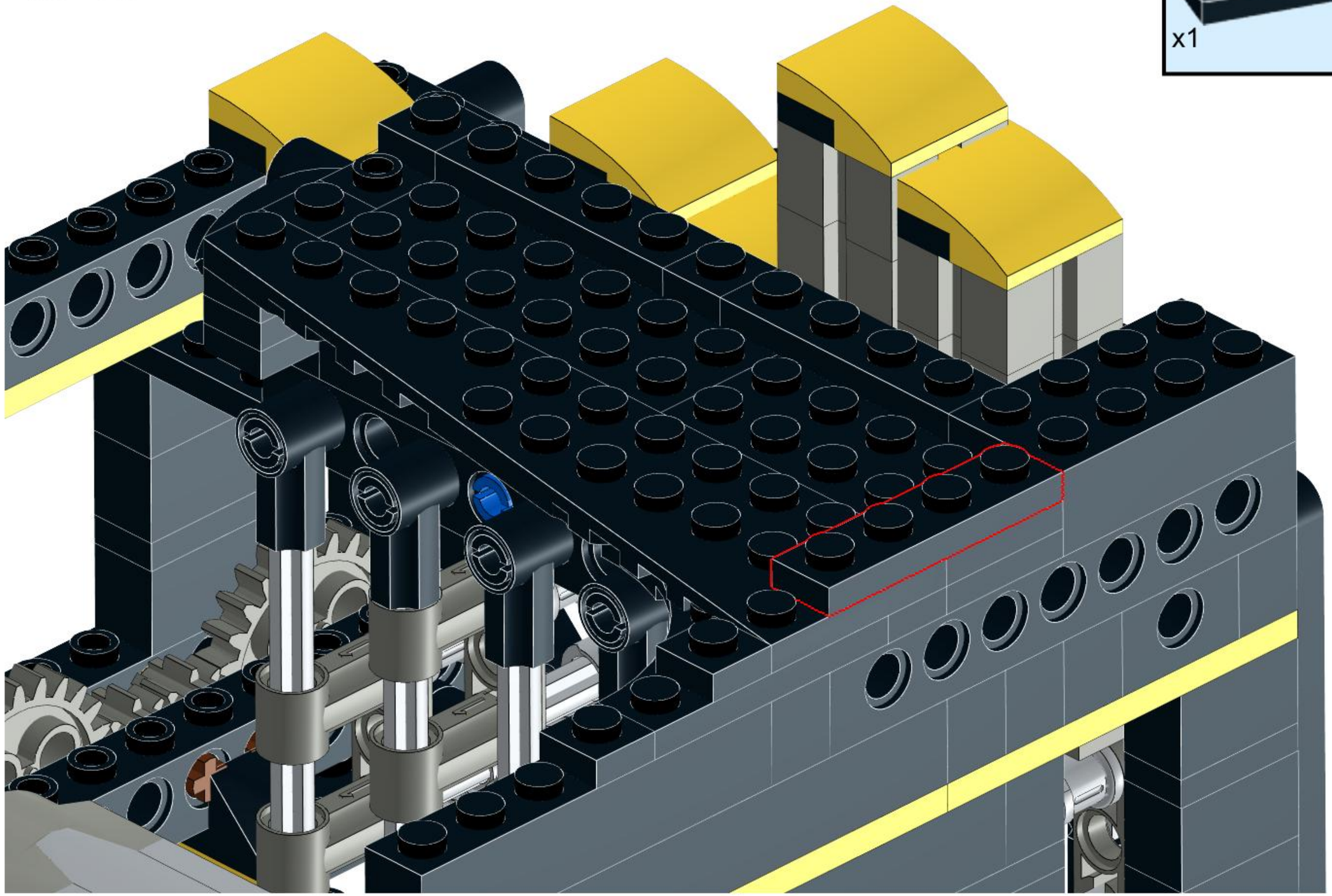

94

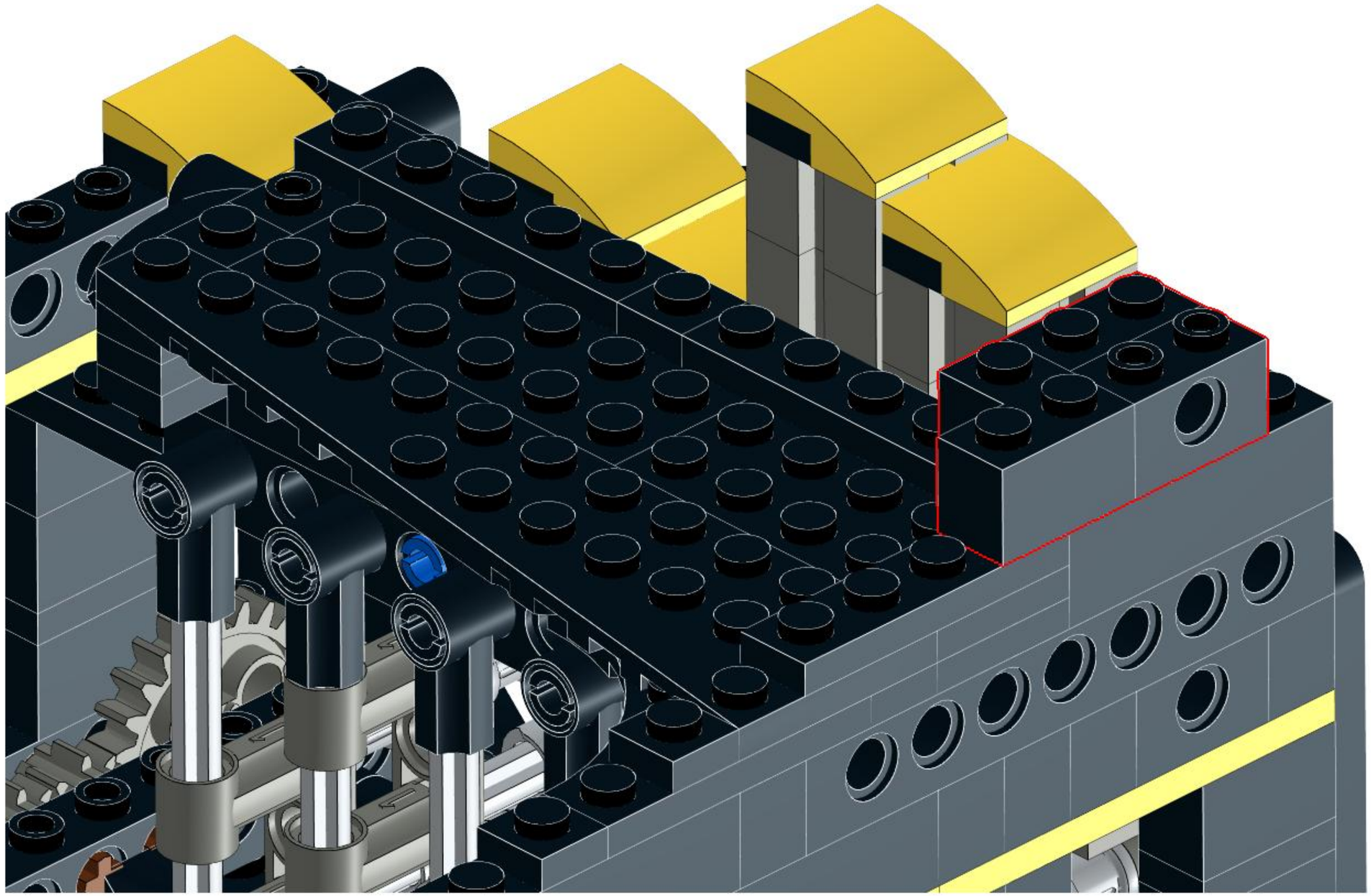

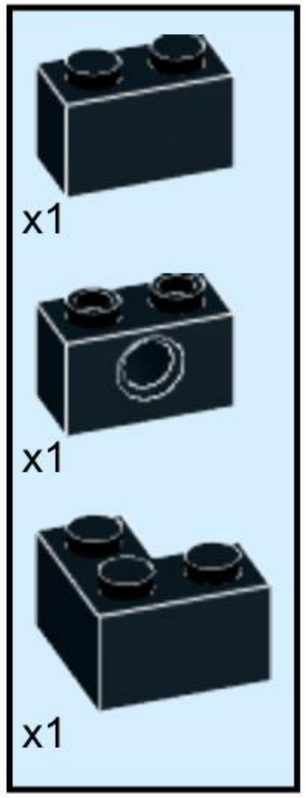

95

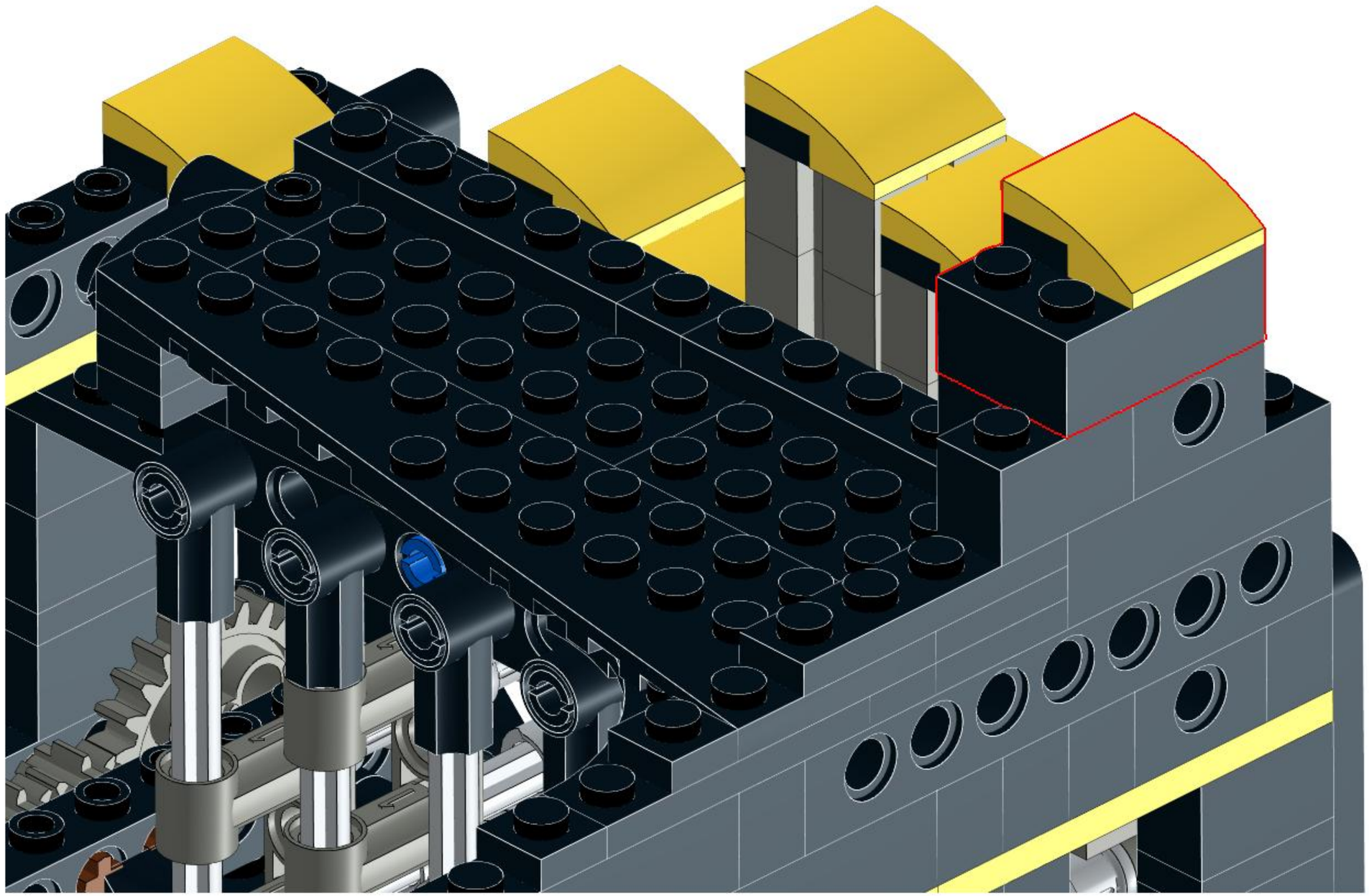

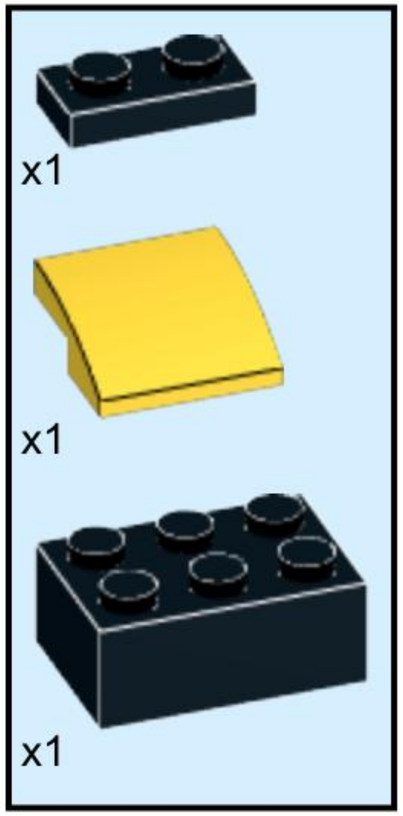

96

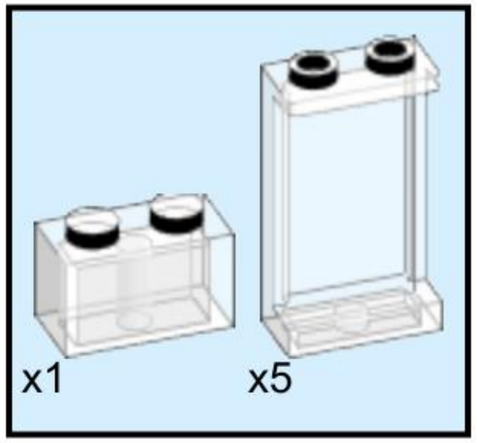

Transparent panels are 3 bricks high.

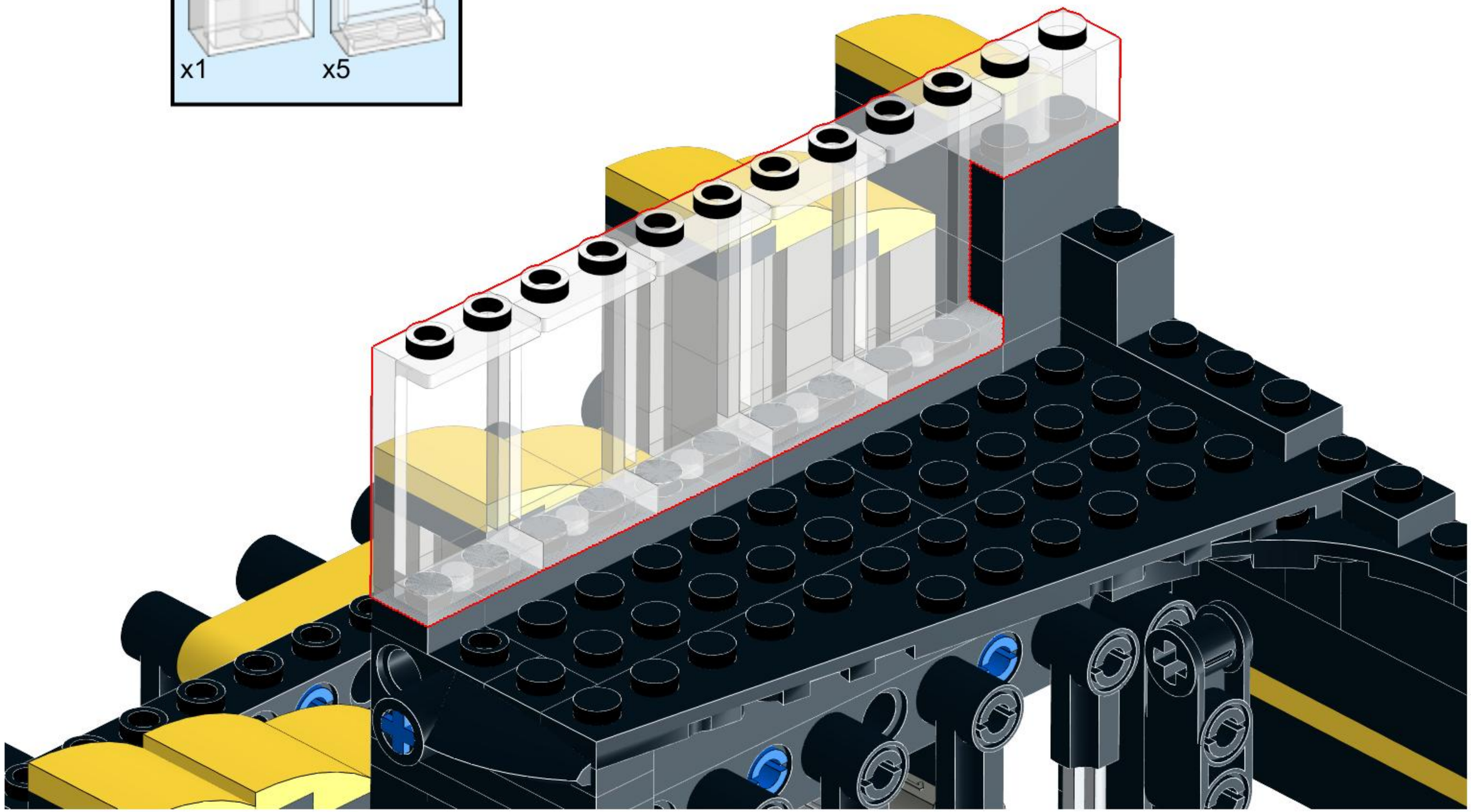

97

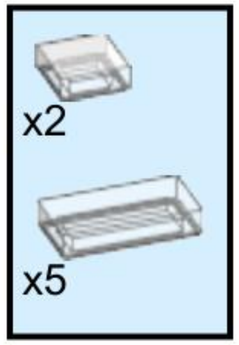

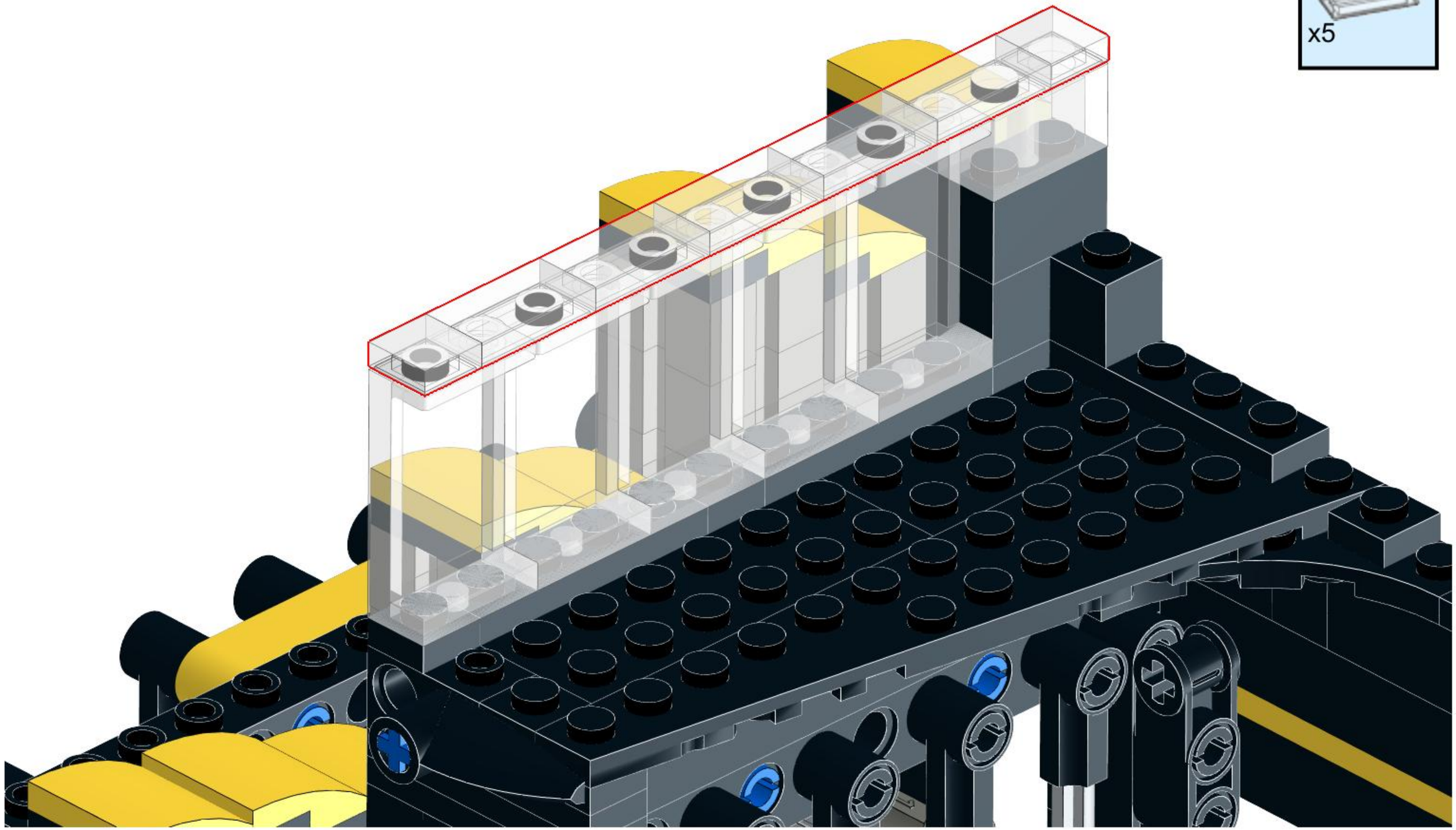

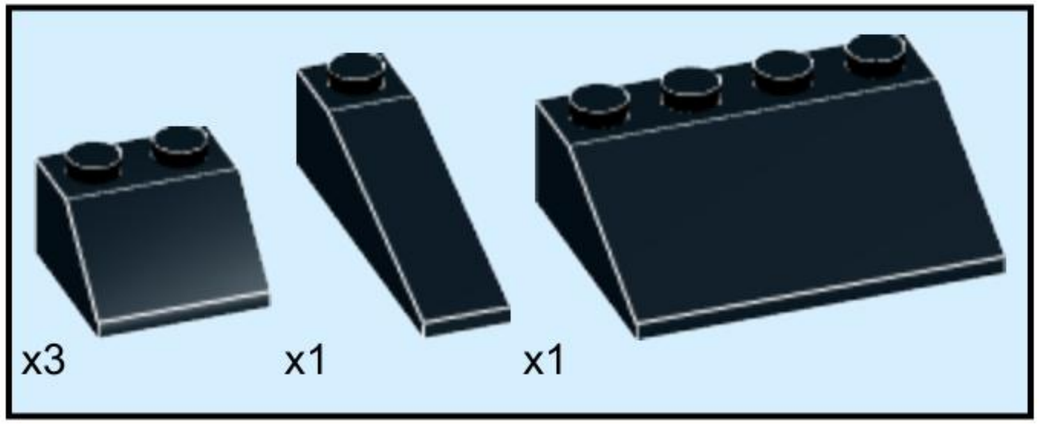
x3
x1
x1

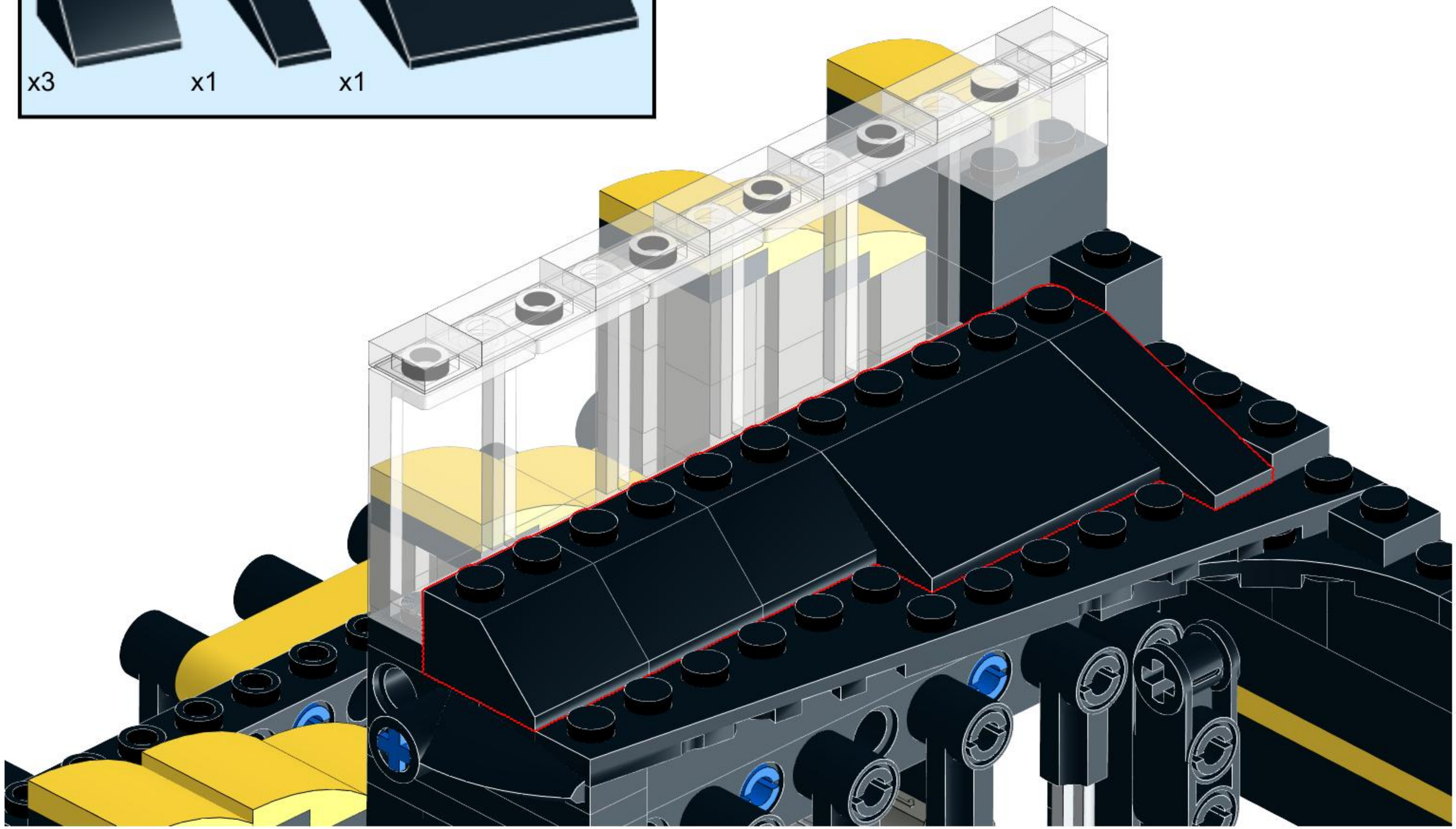

99

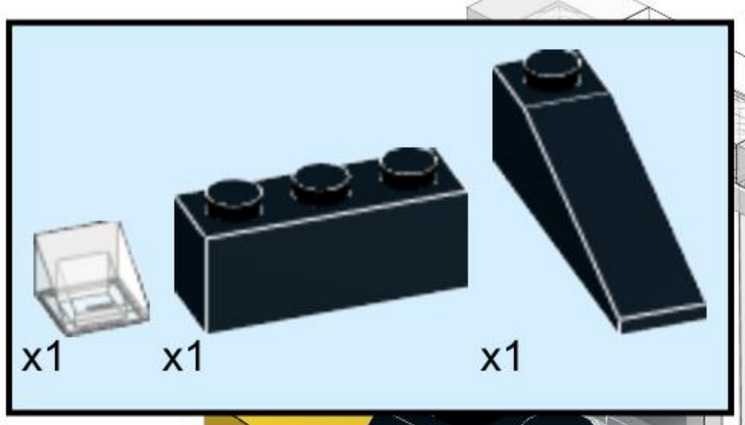

100

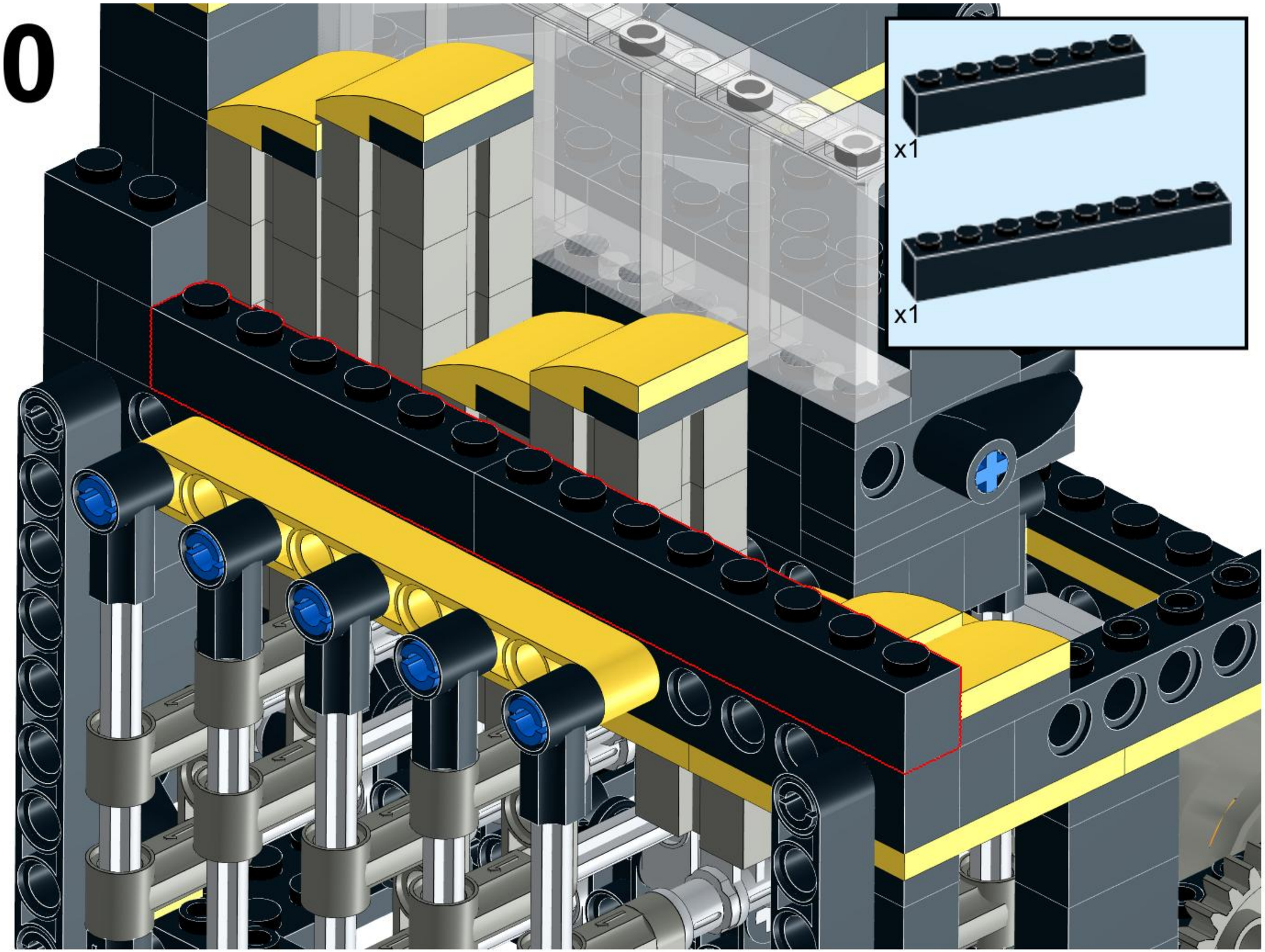

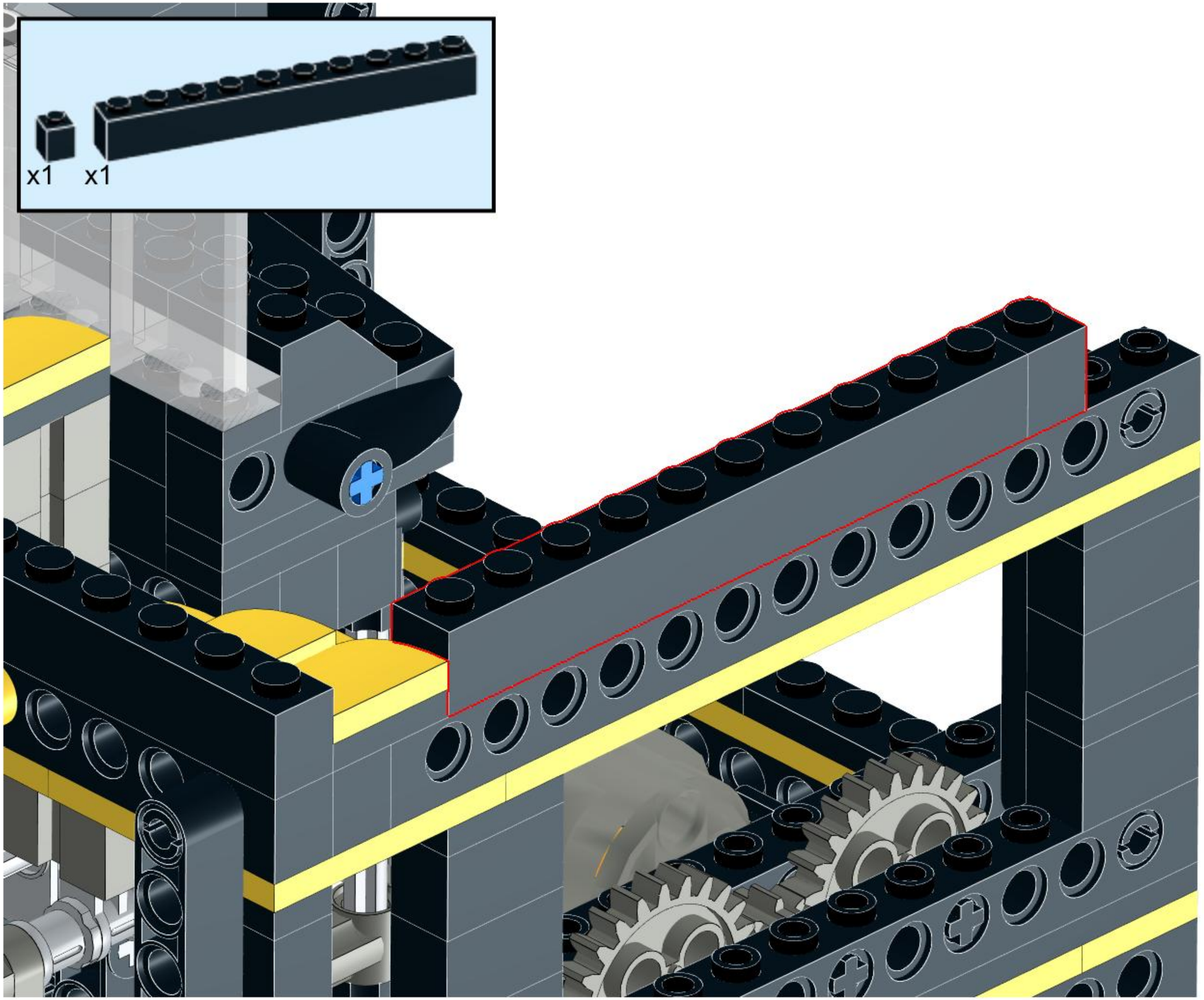
x1
x1

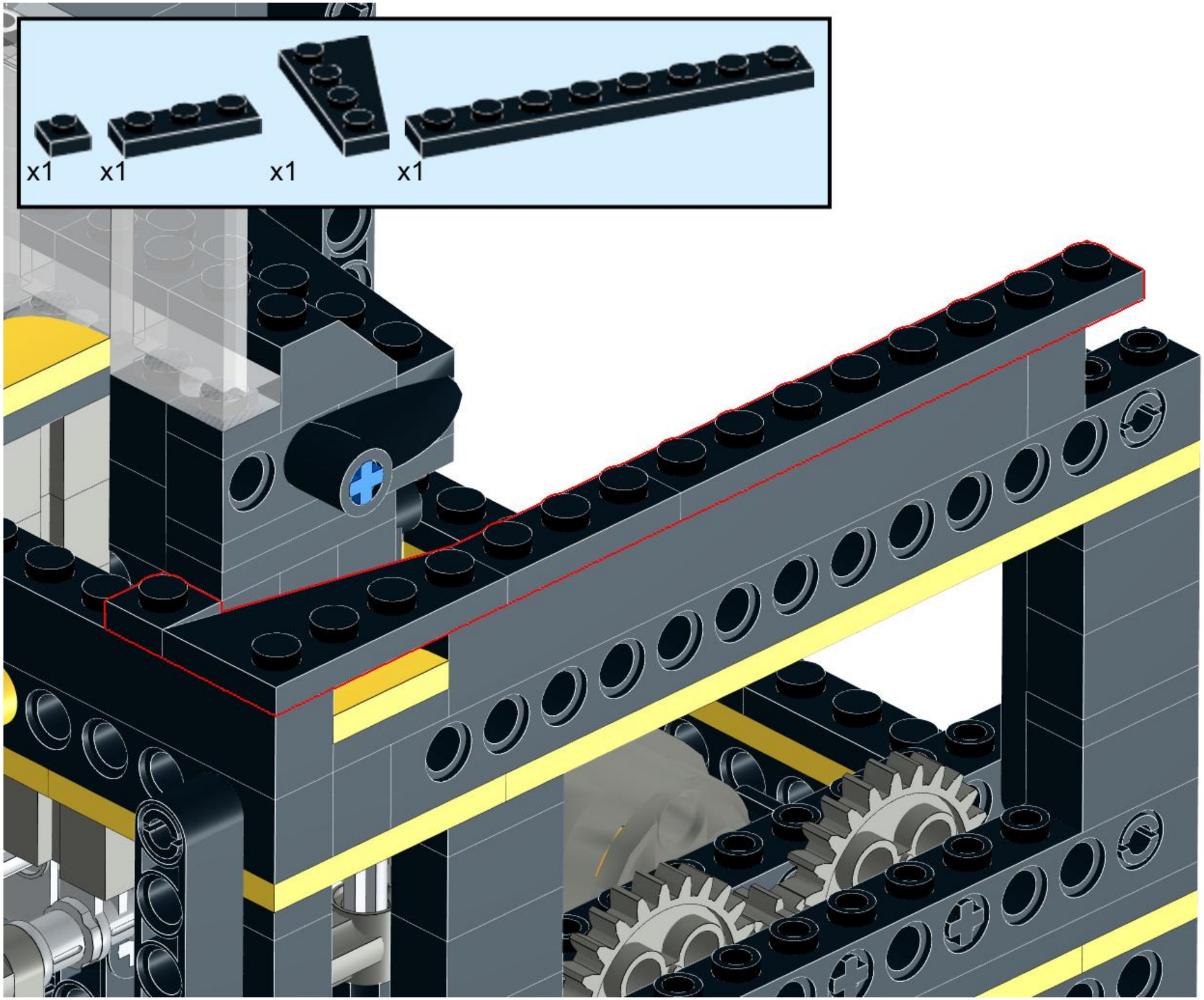
x1
x1
x1
x1

103

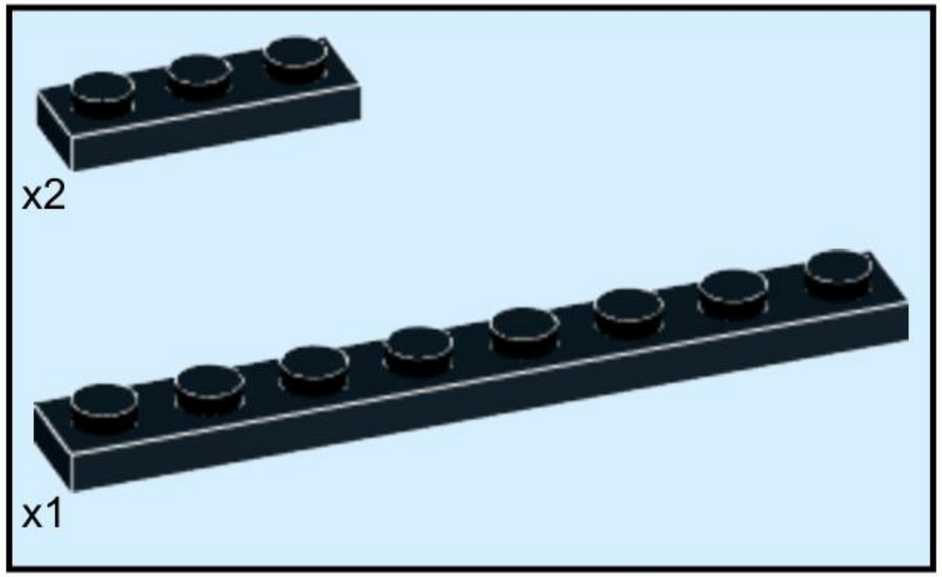

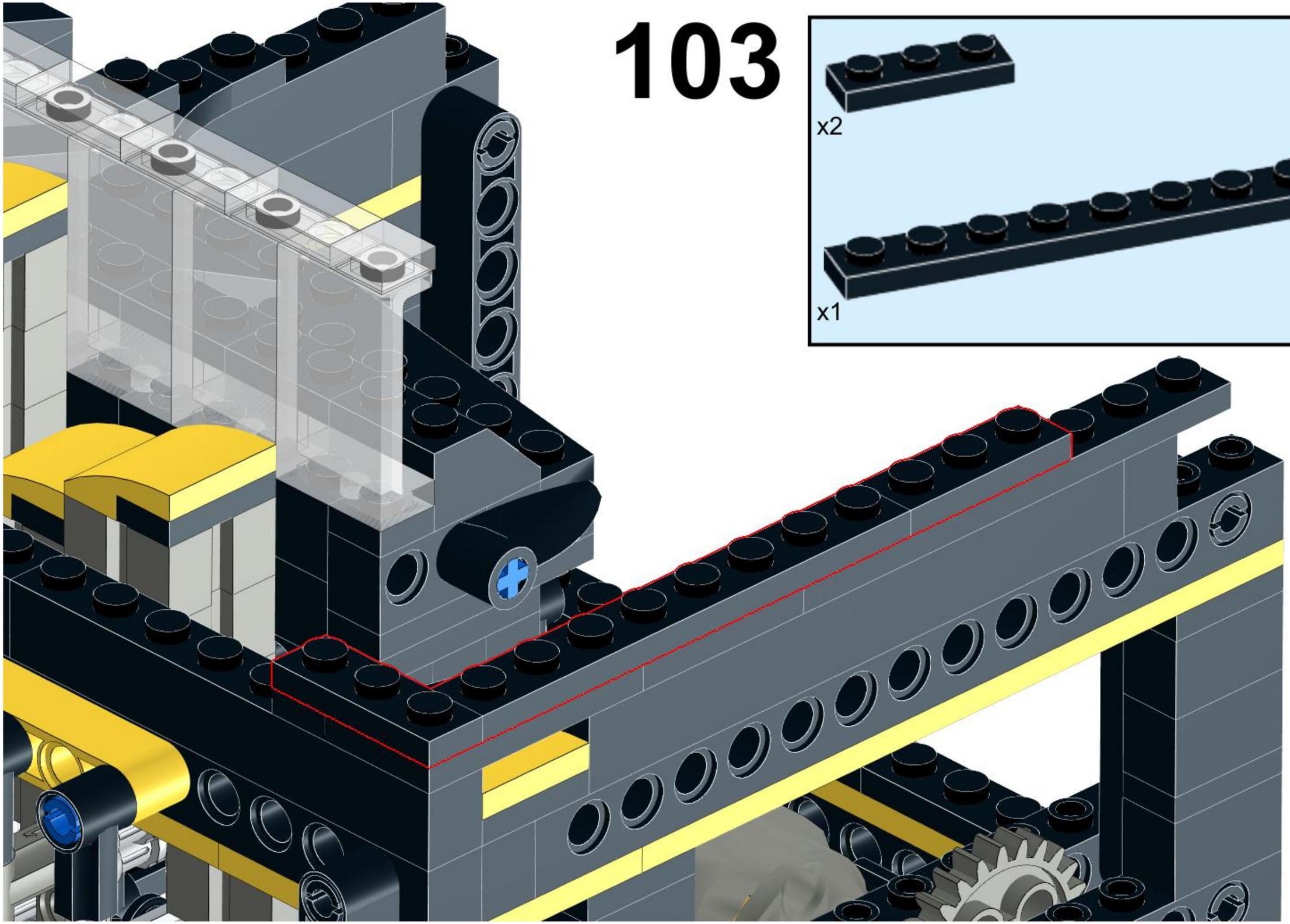

104

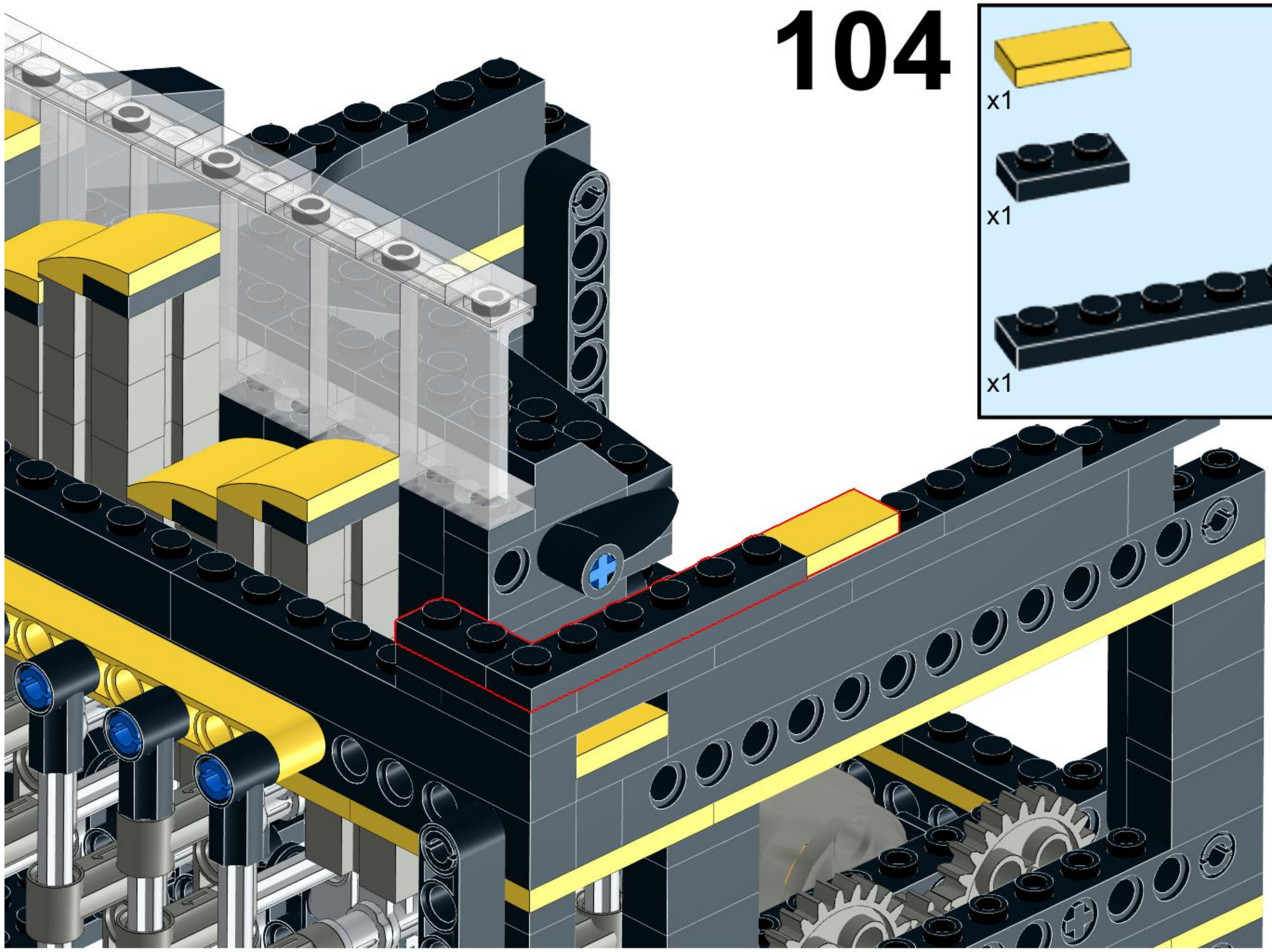

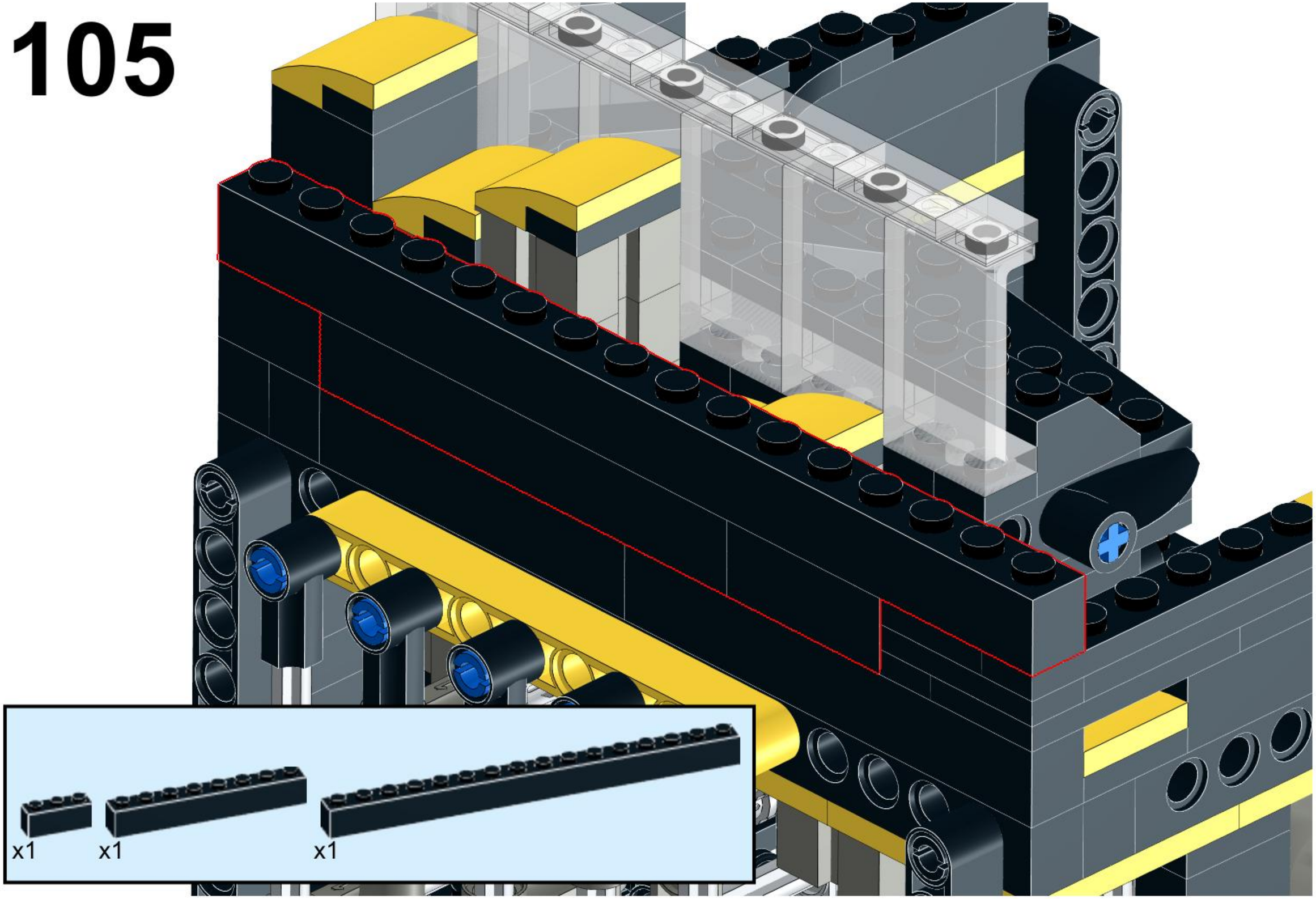
x1
x1
x1

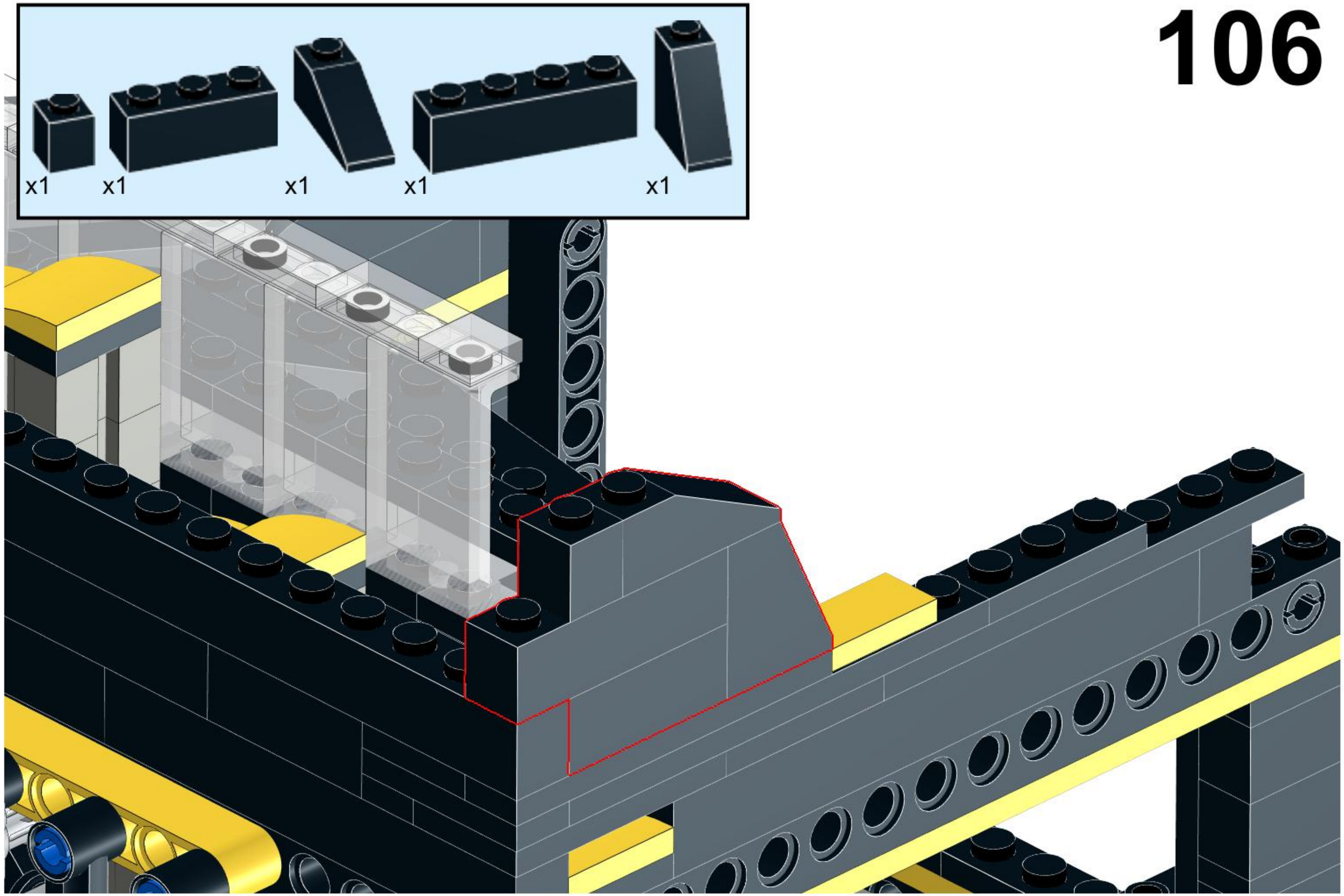
x1
x1
x1
x1
x1

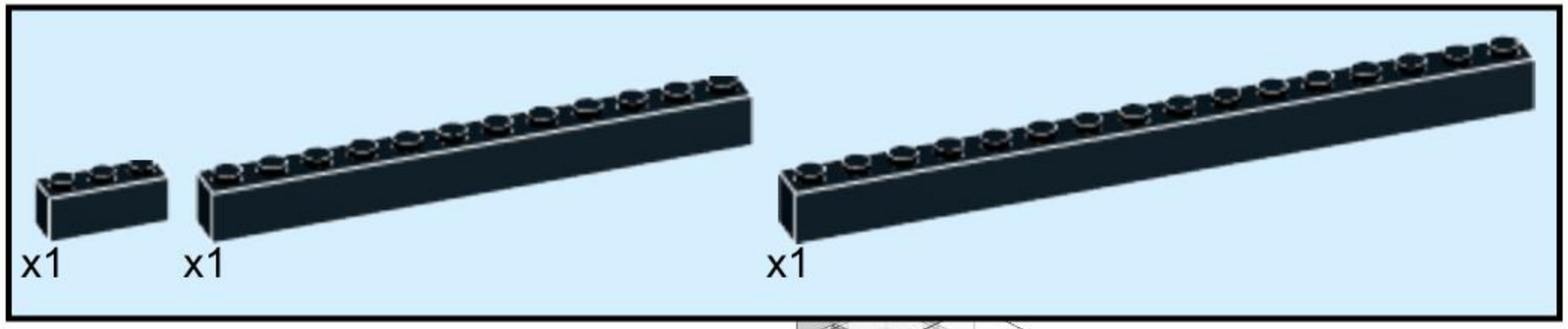
x1
x1
x1

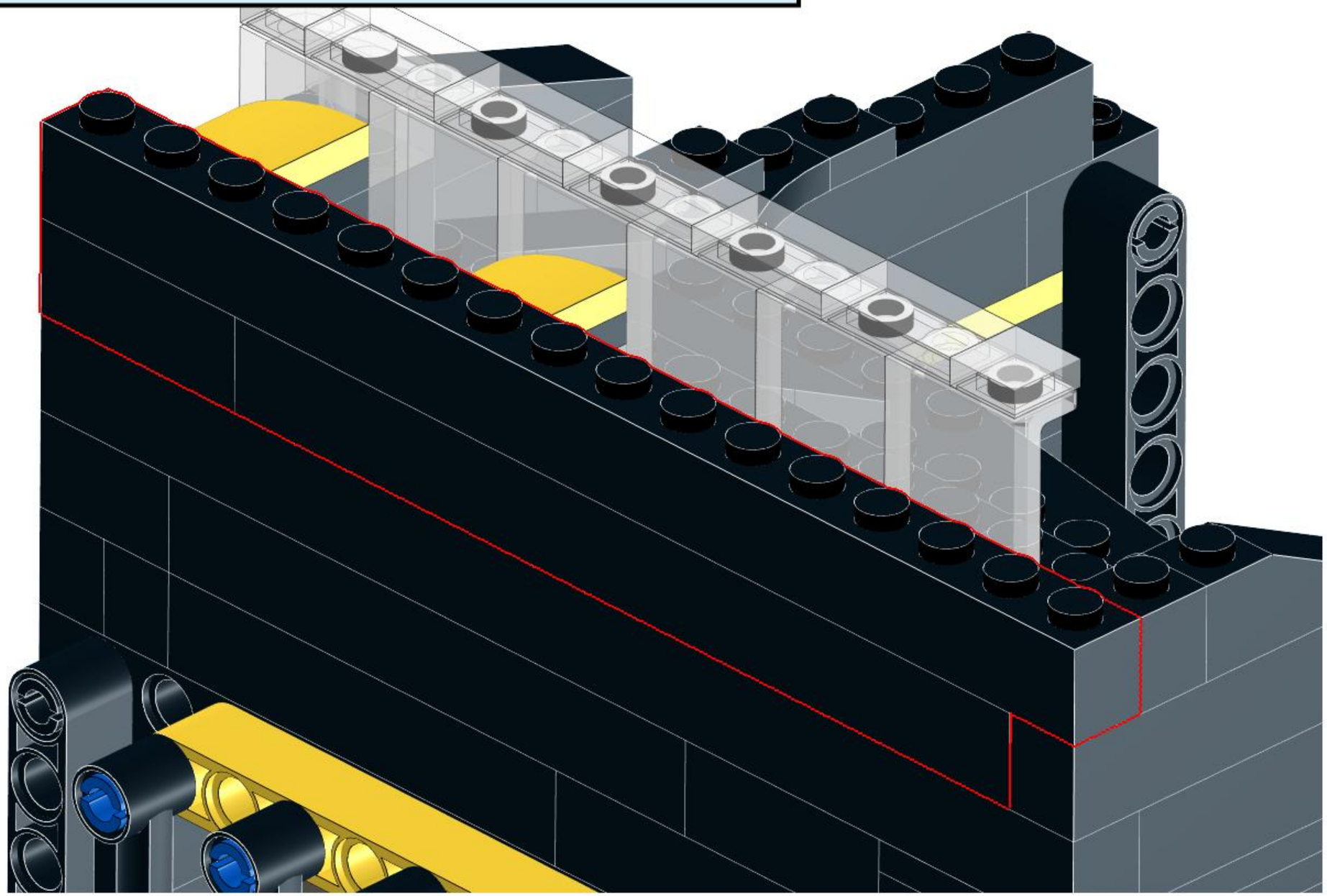

108

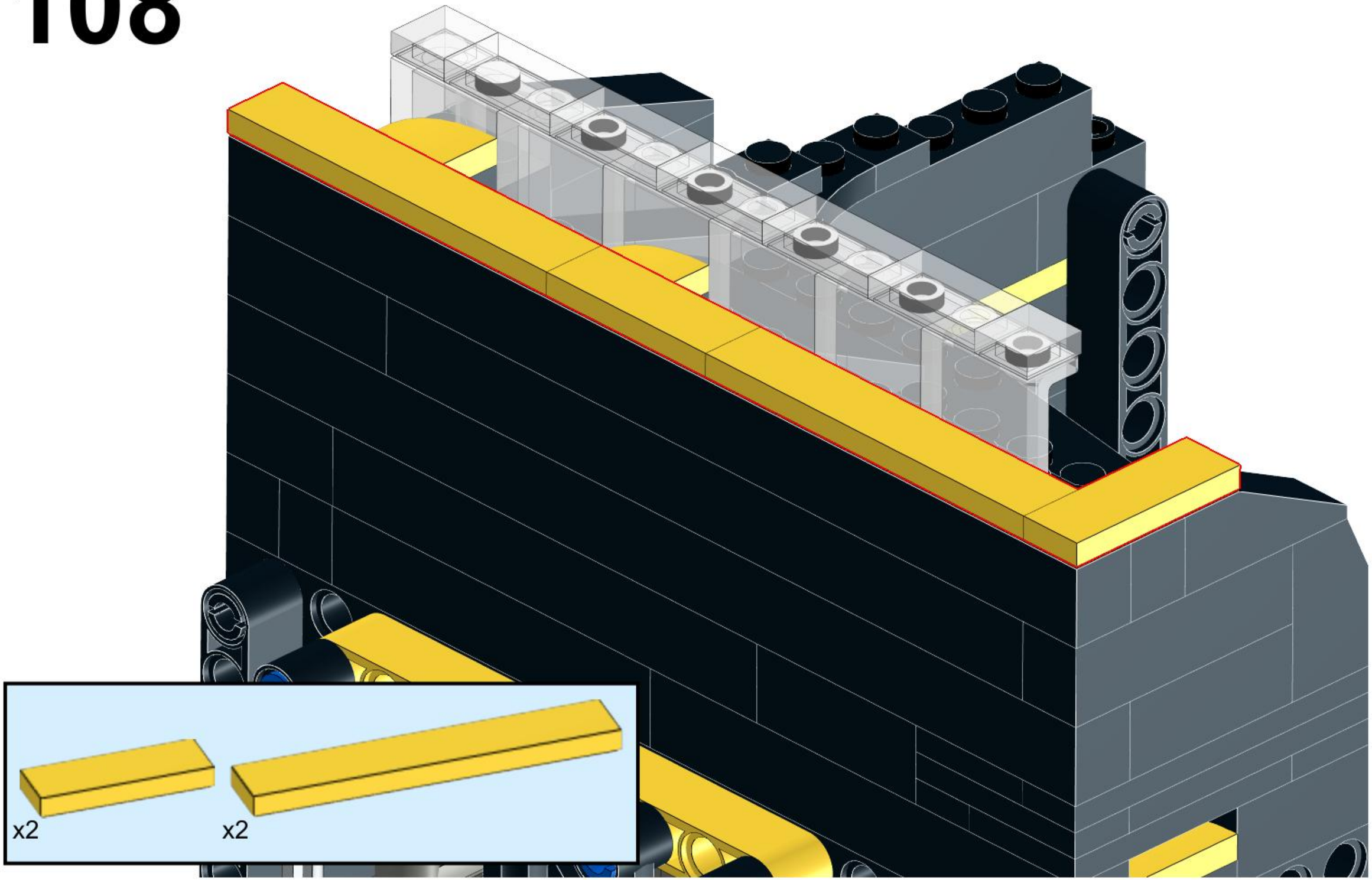

109

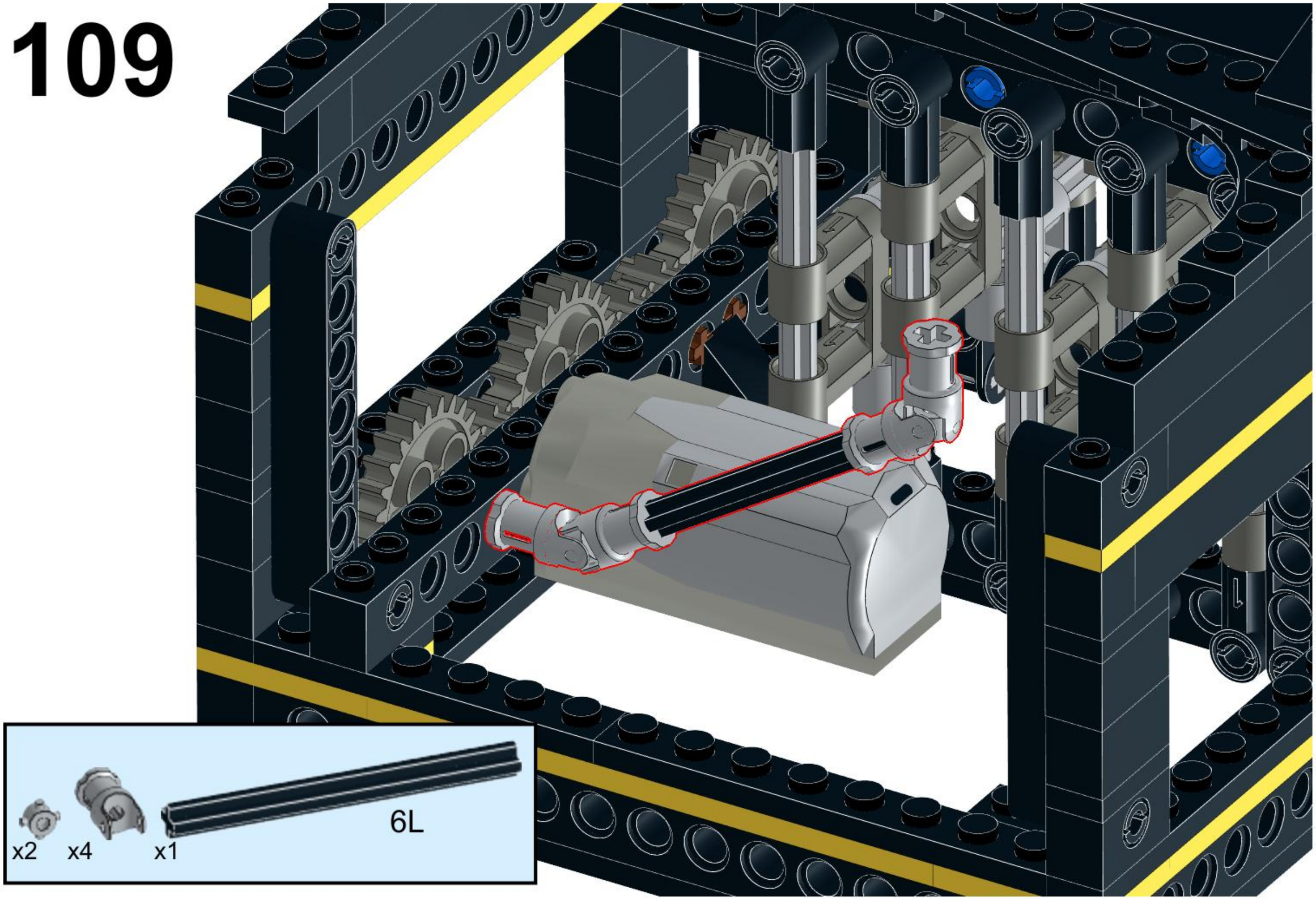

110

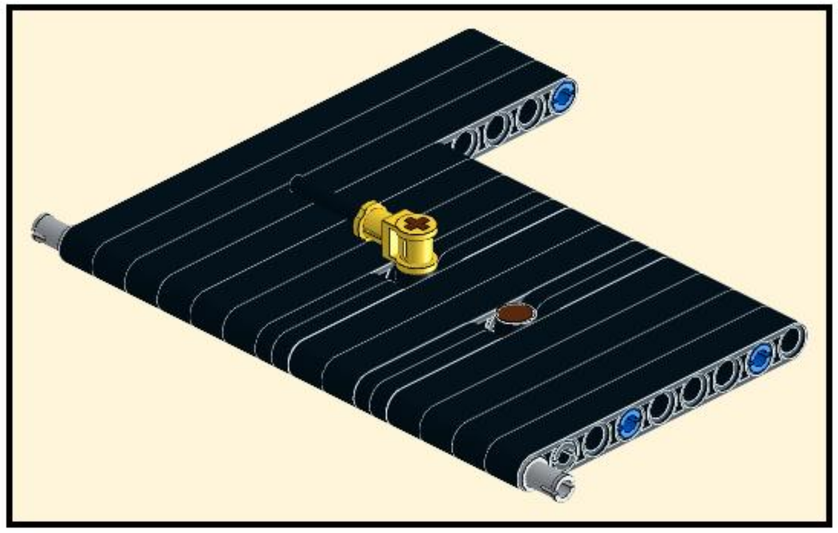

111

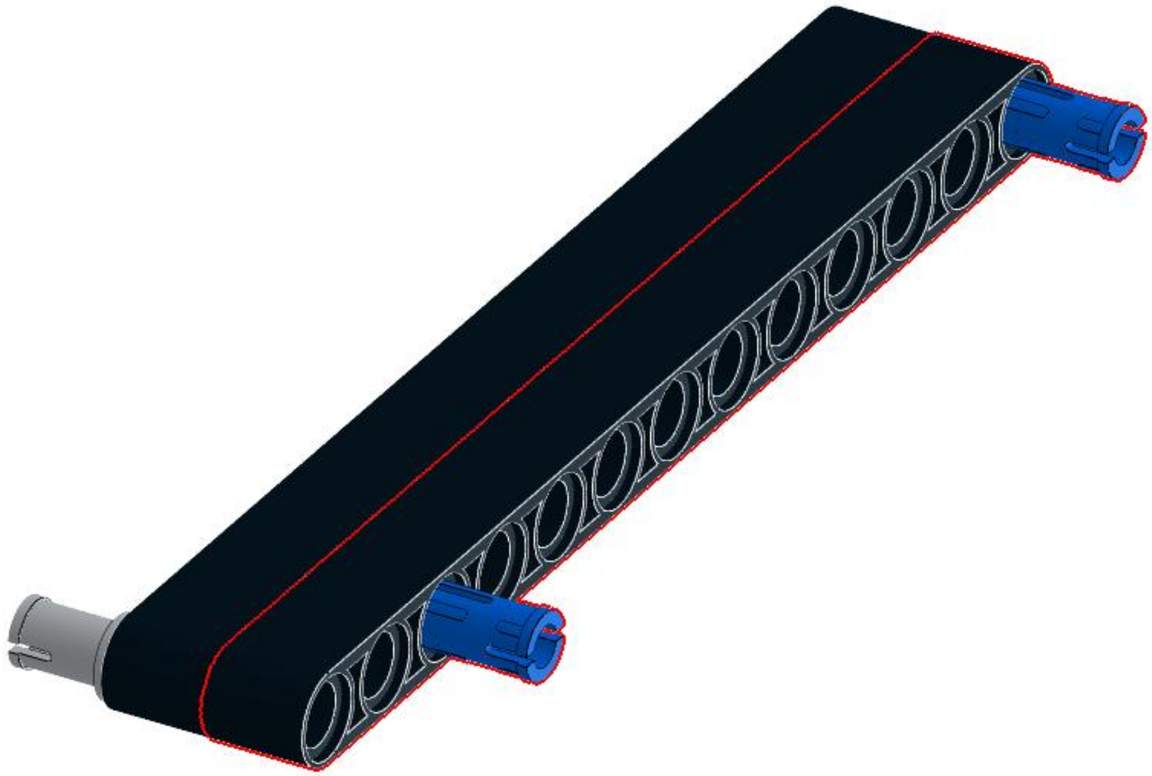

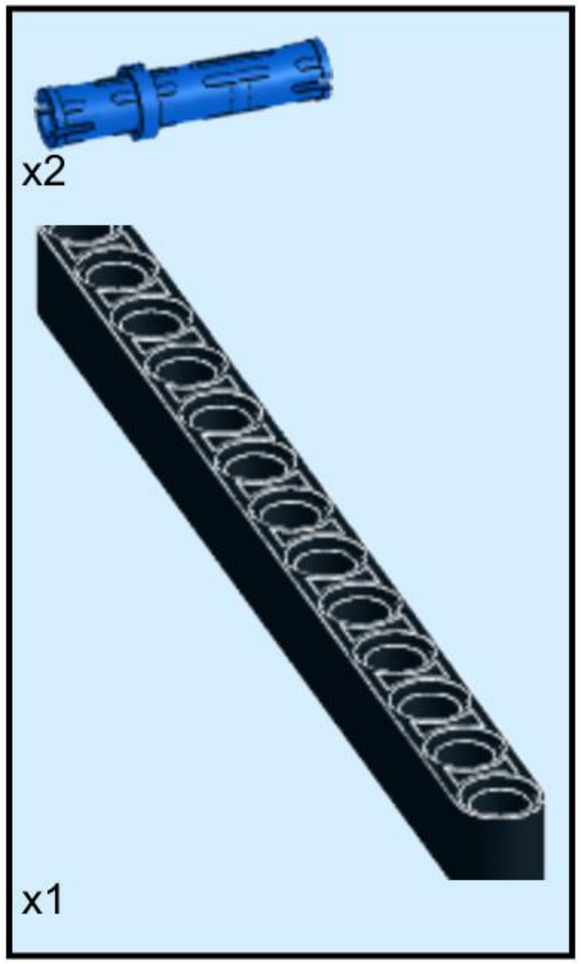

112

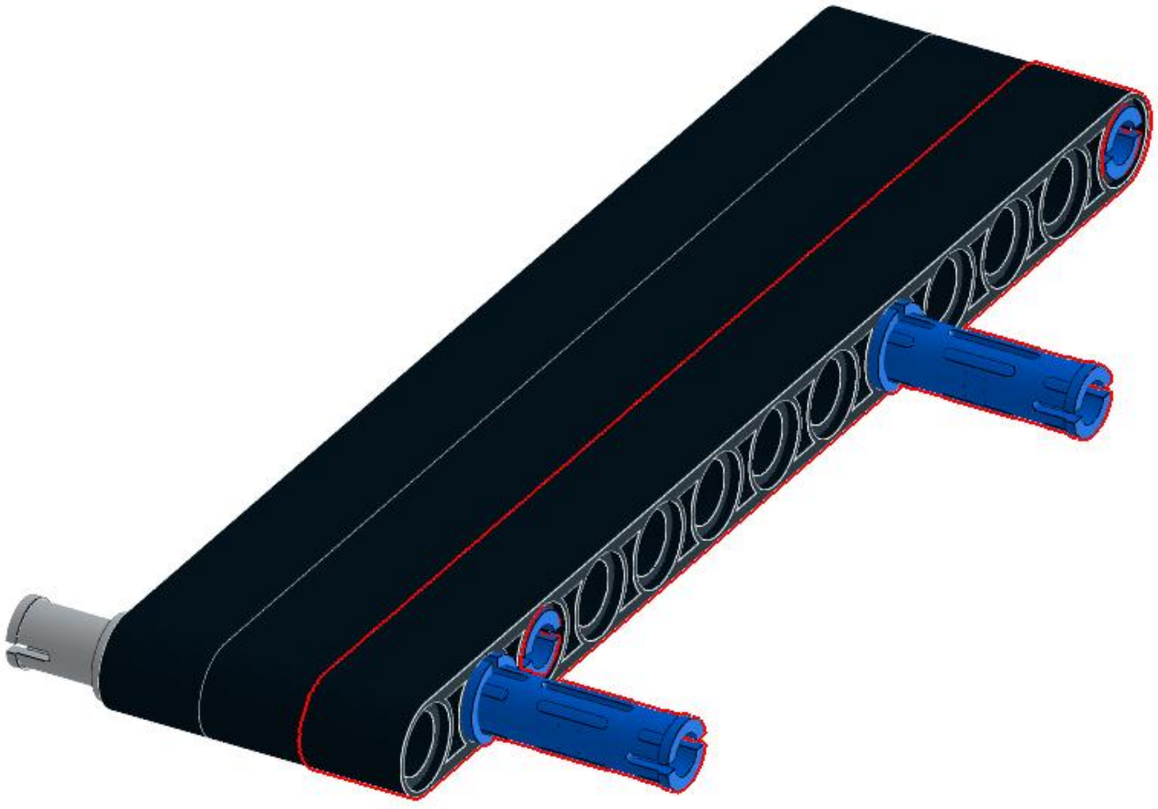

113

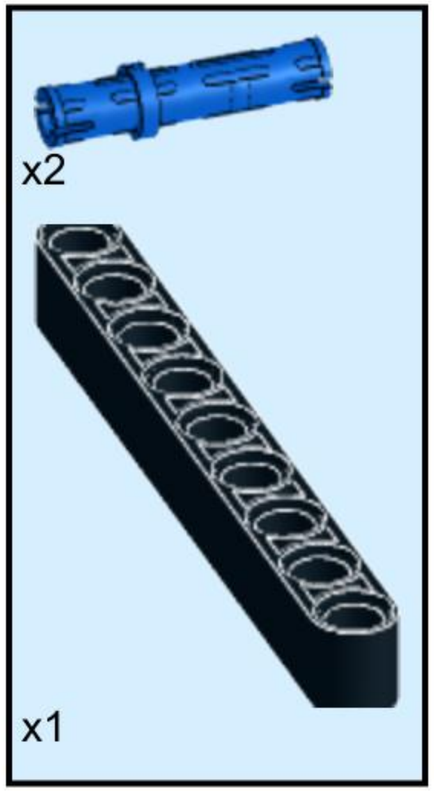

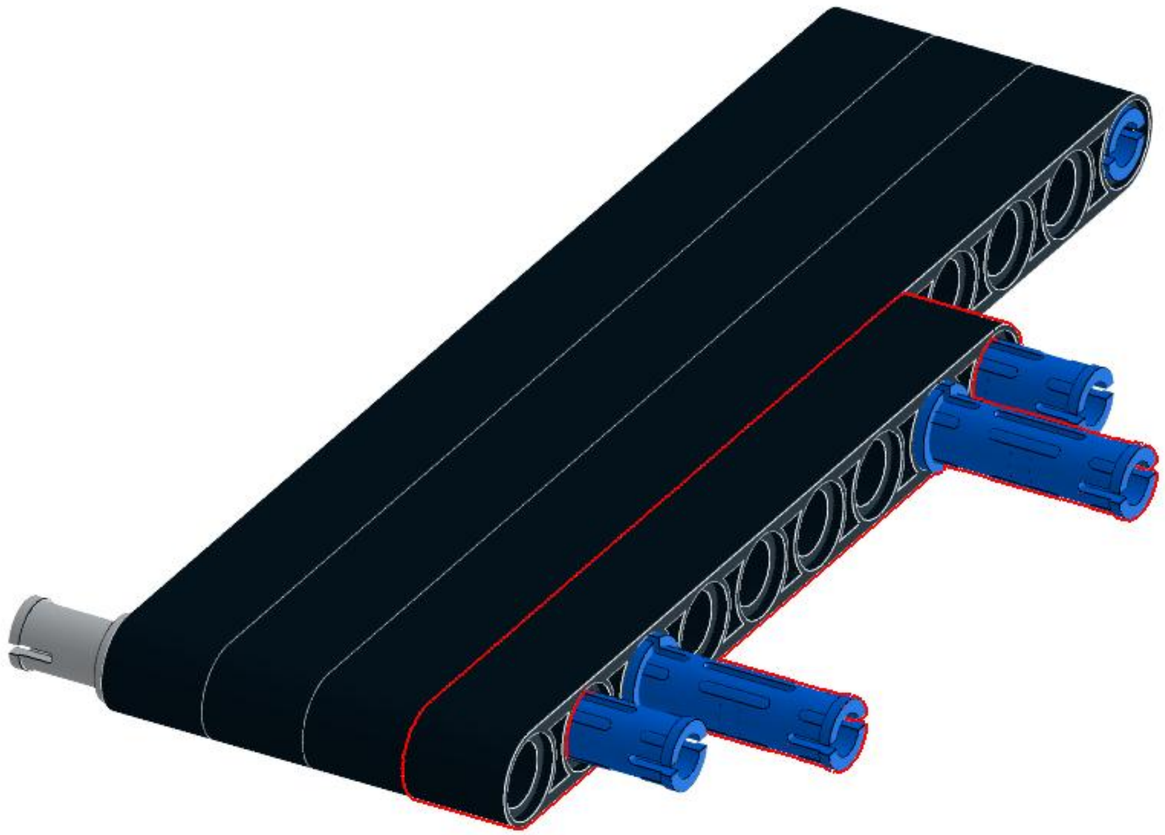

114

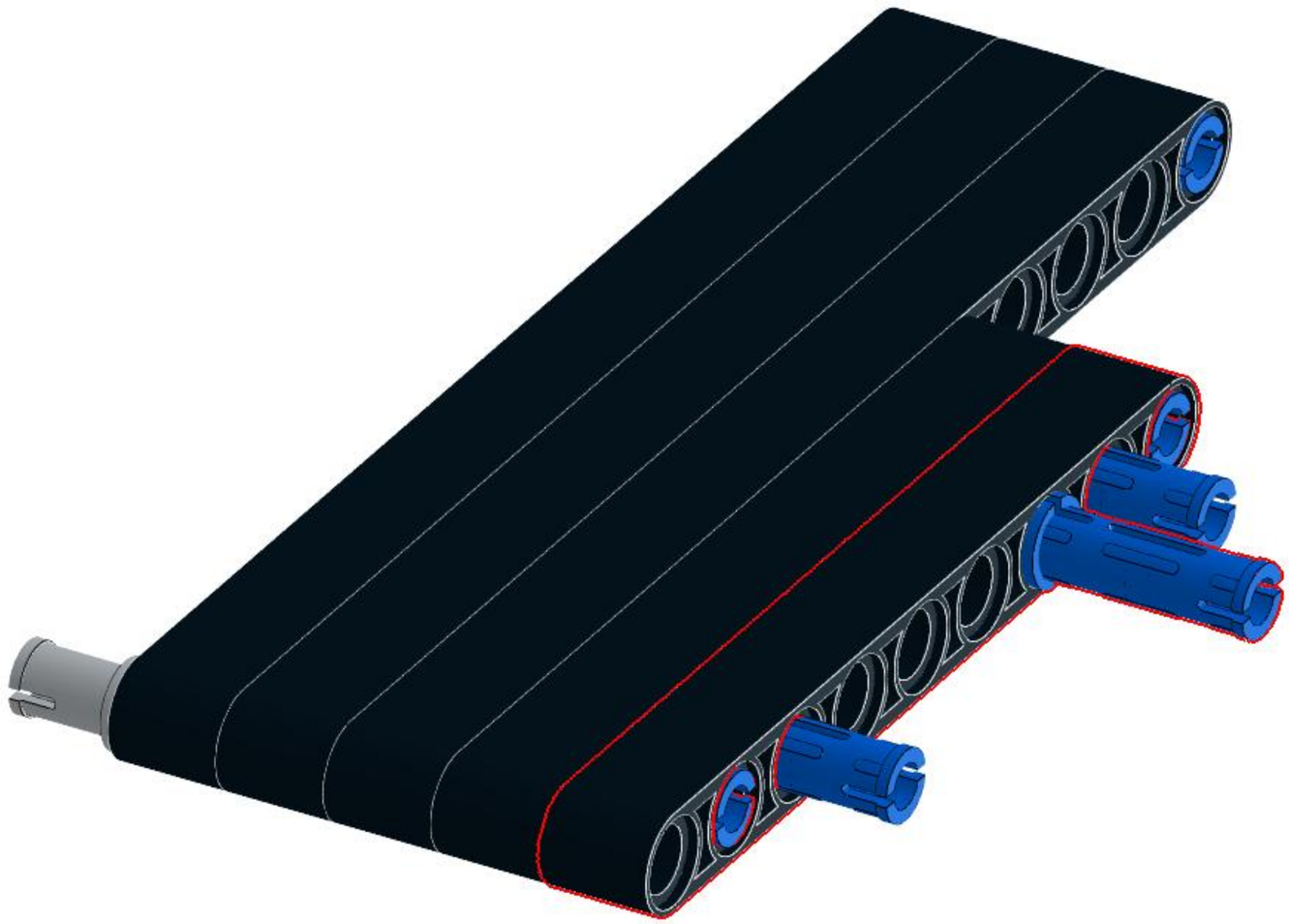

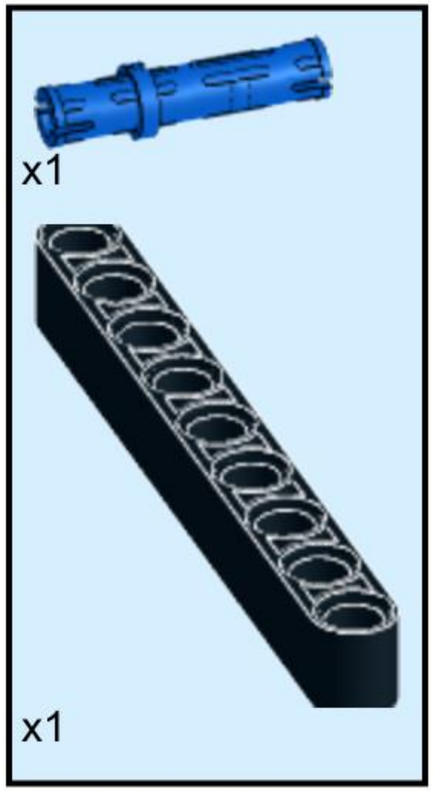

115

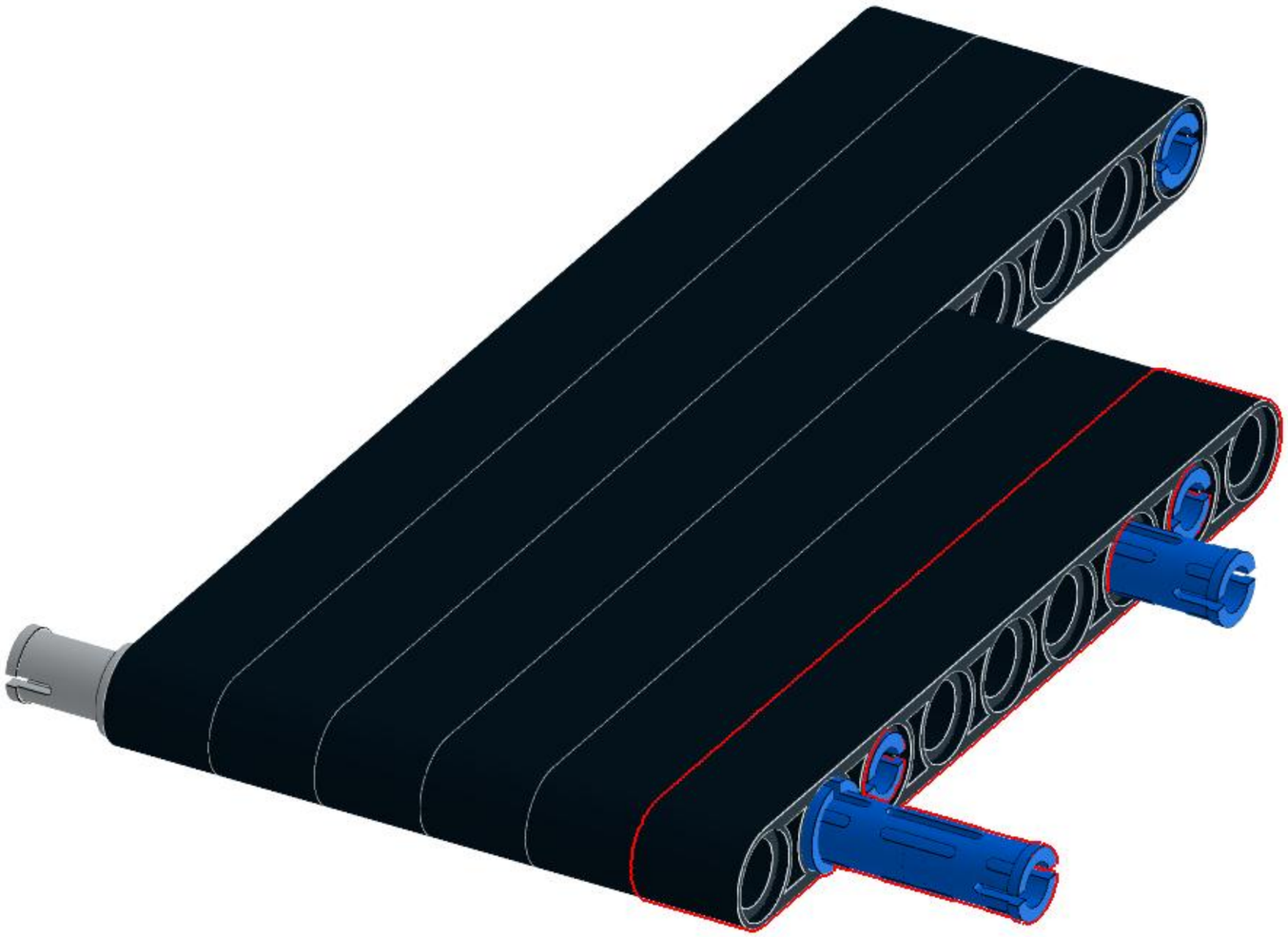

116

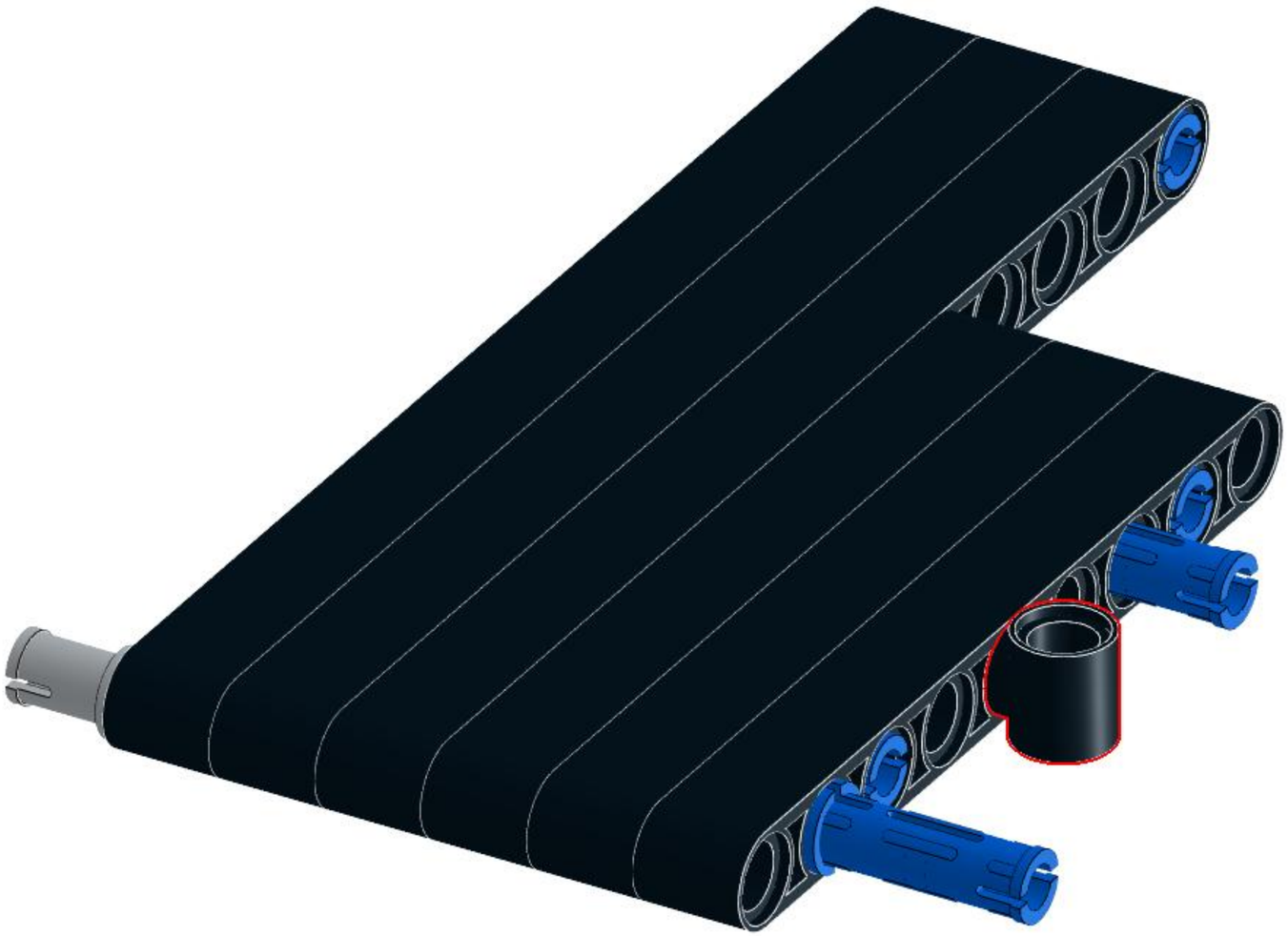

117

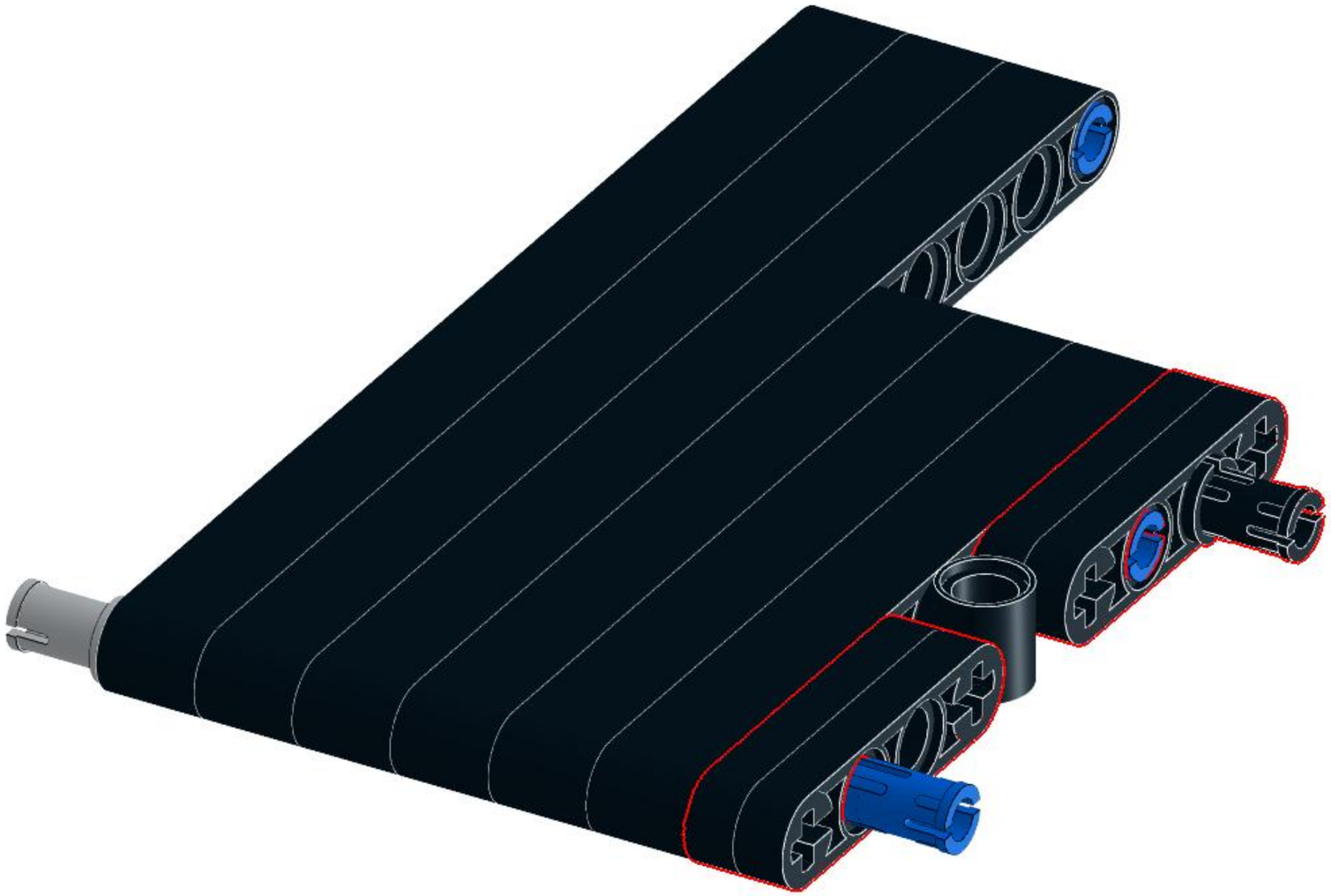

118

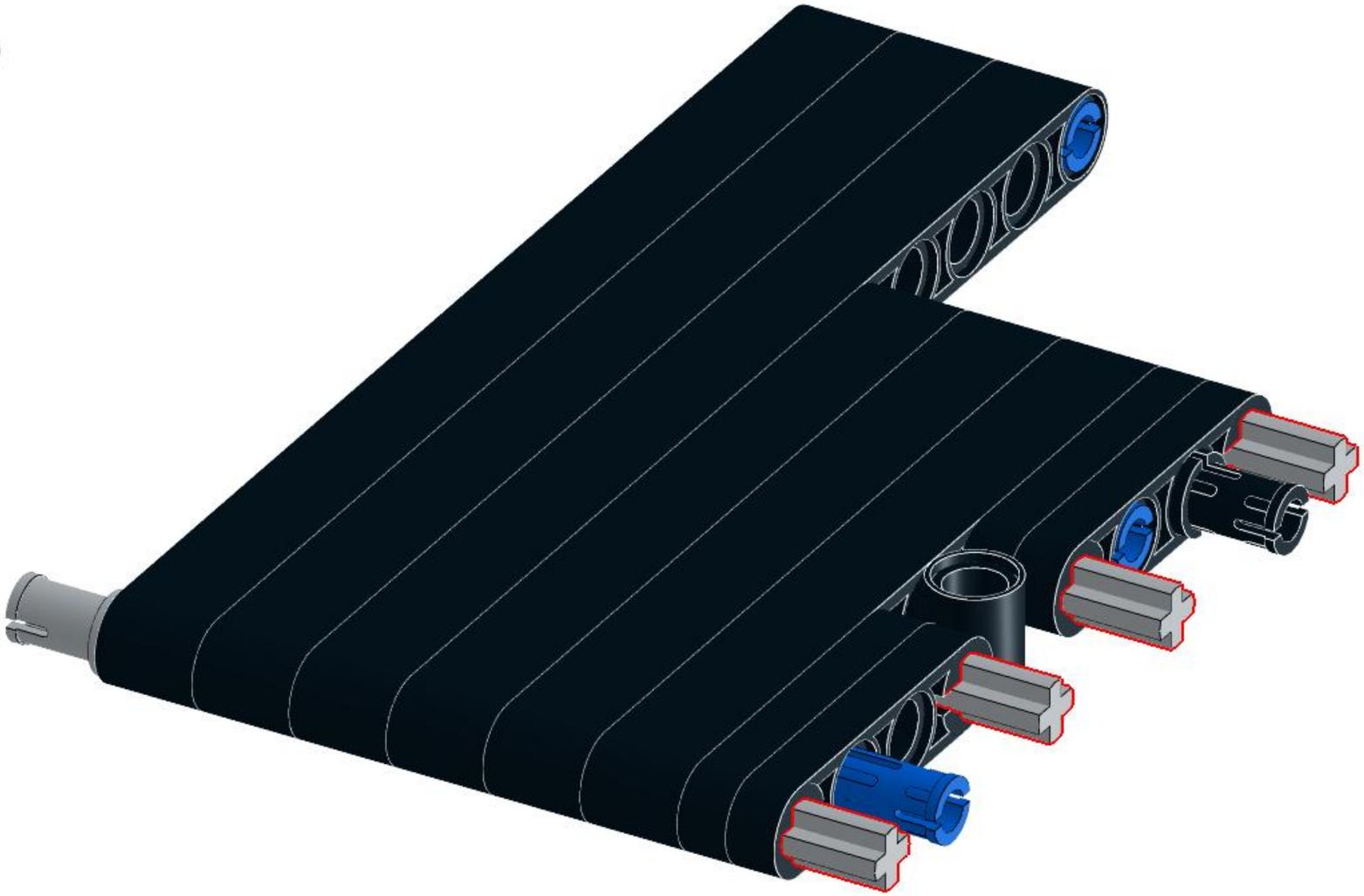

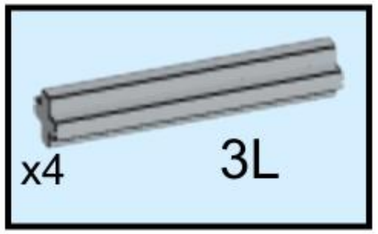

119

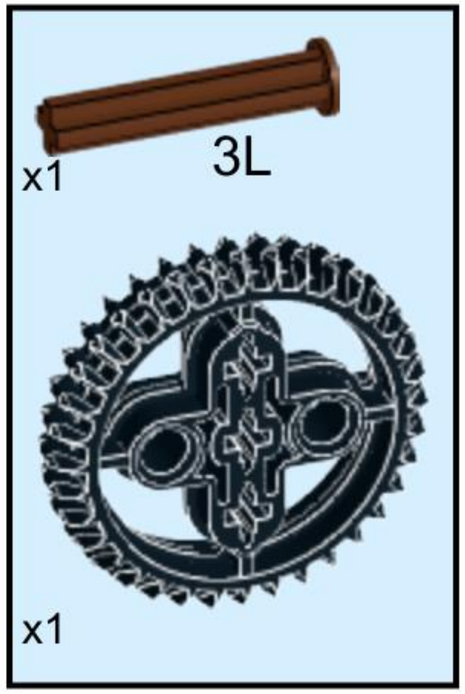

120

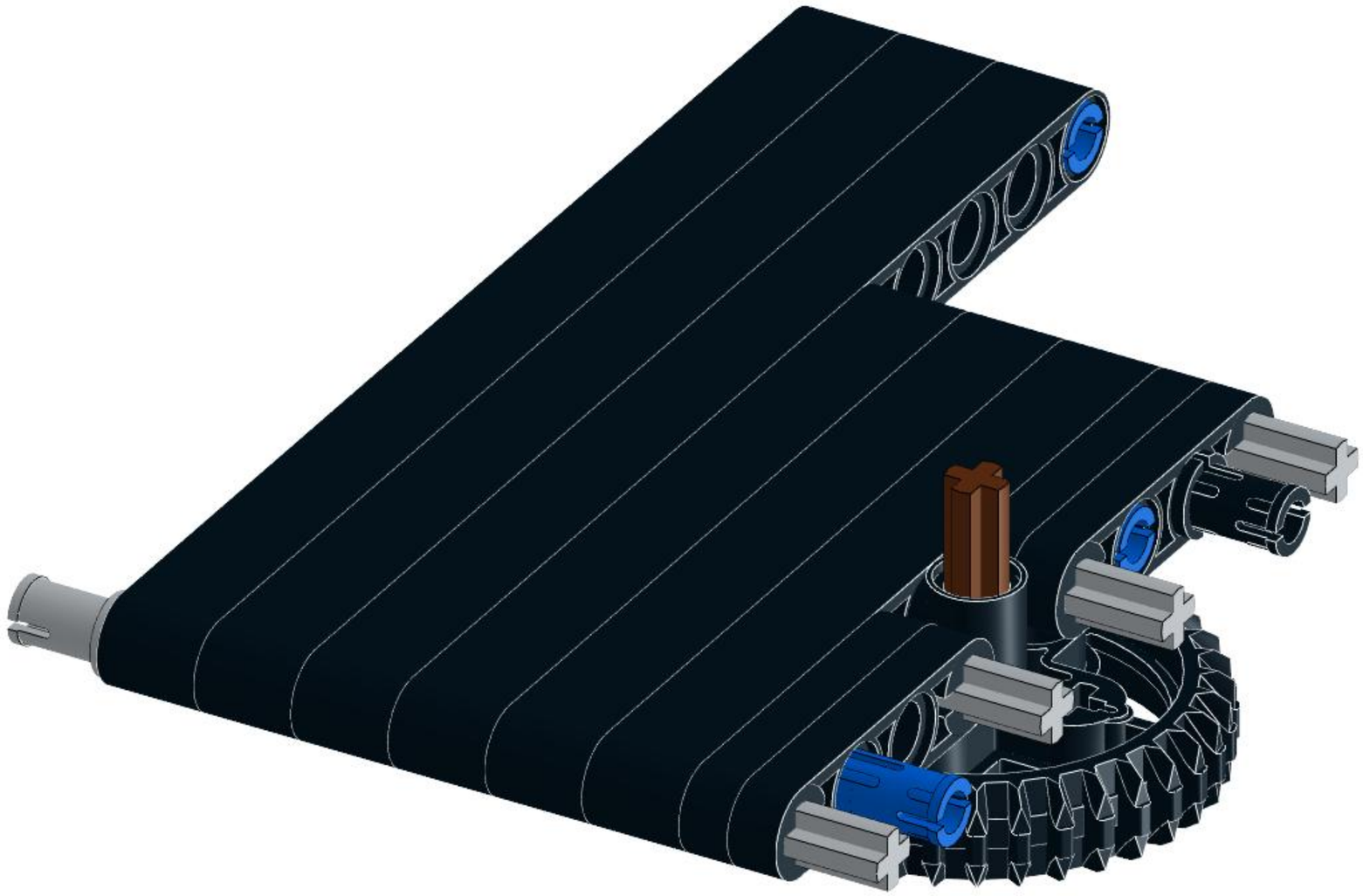

121

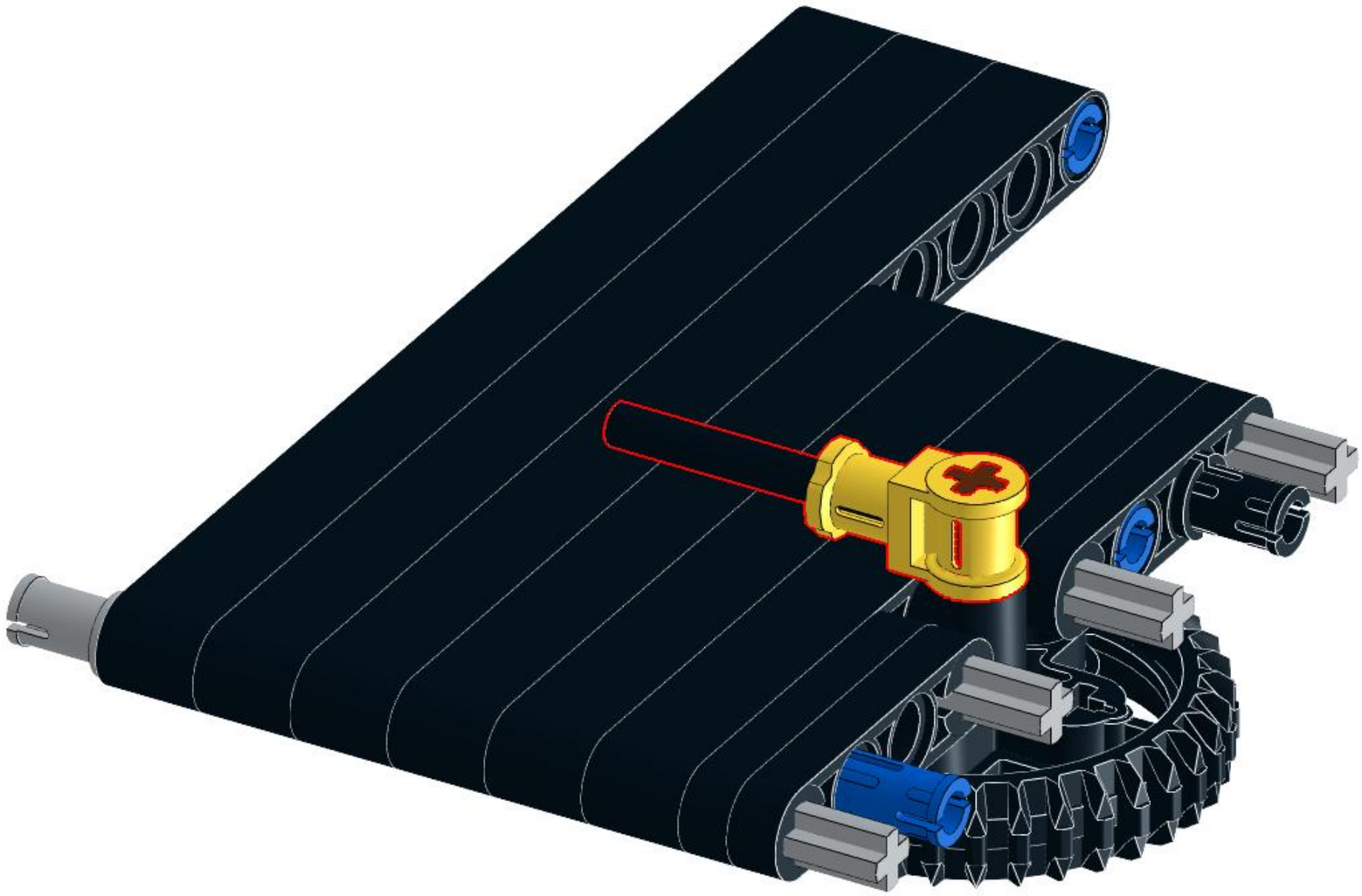

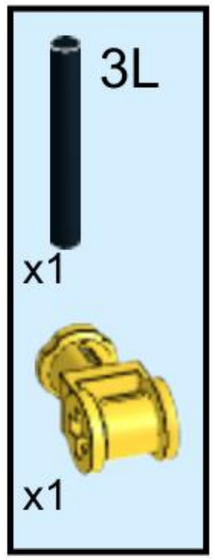

122

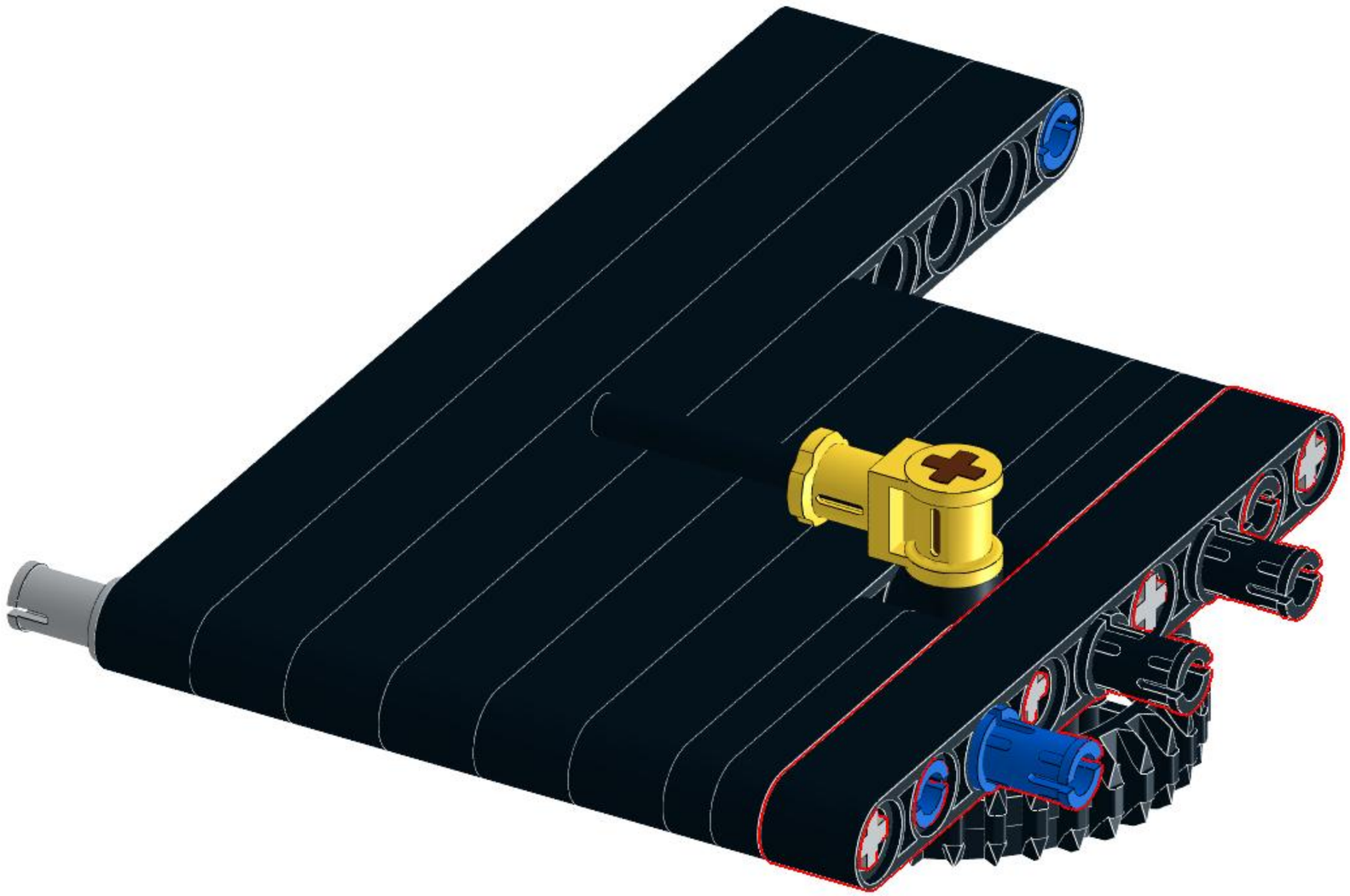

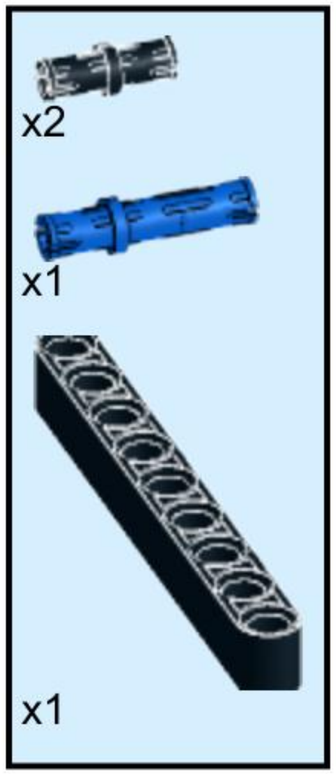

123

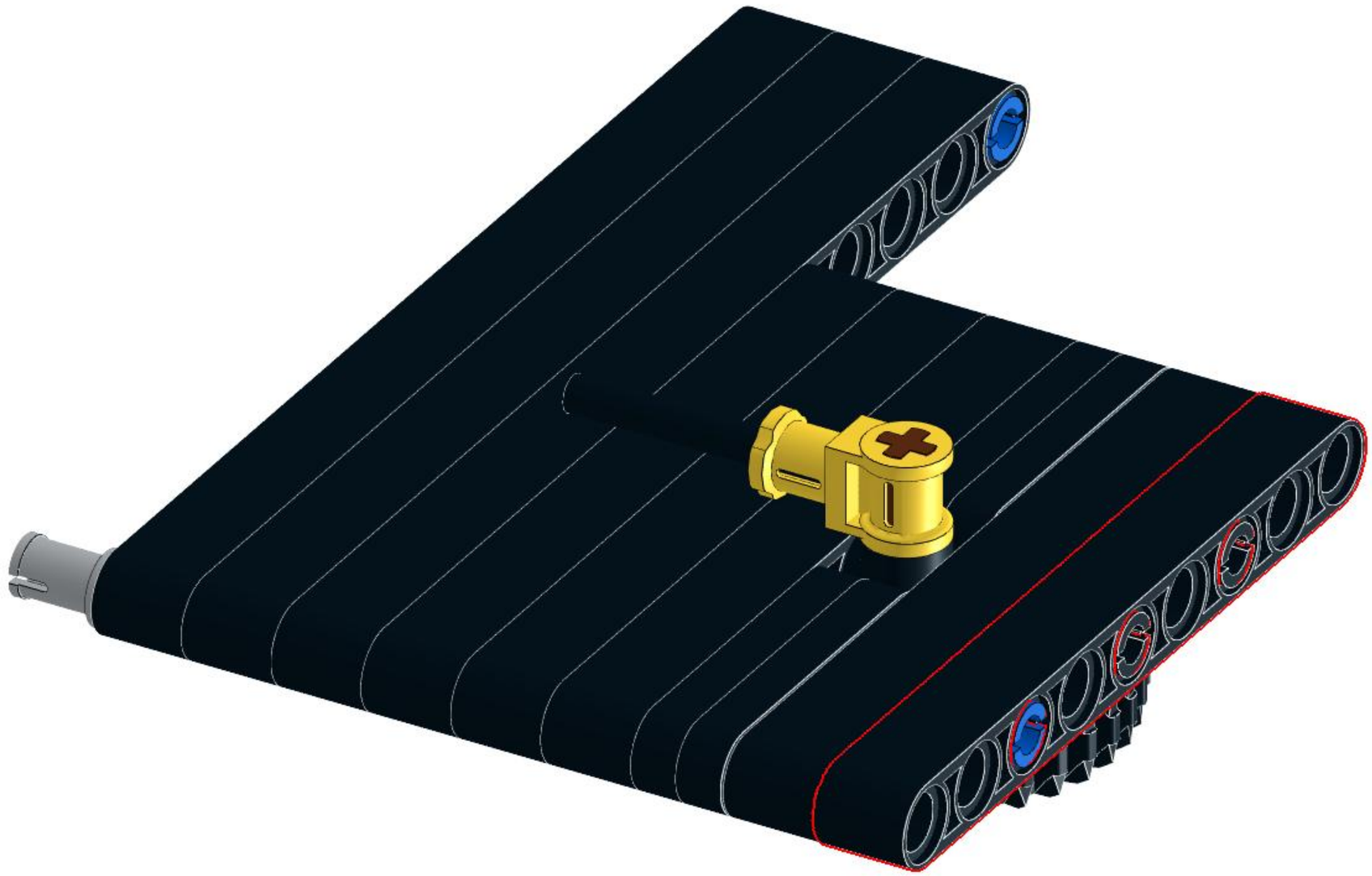

124

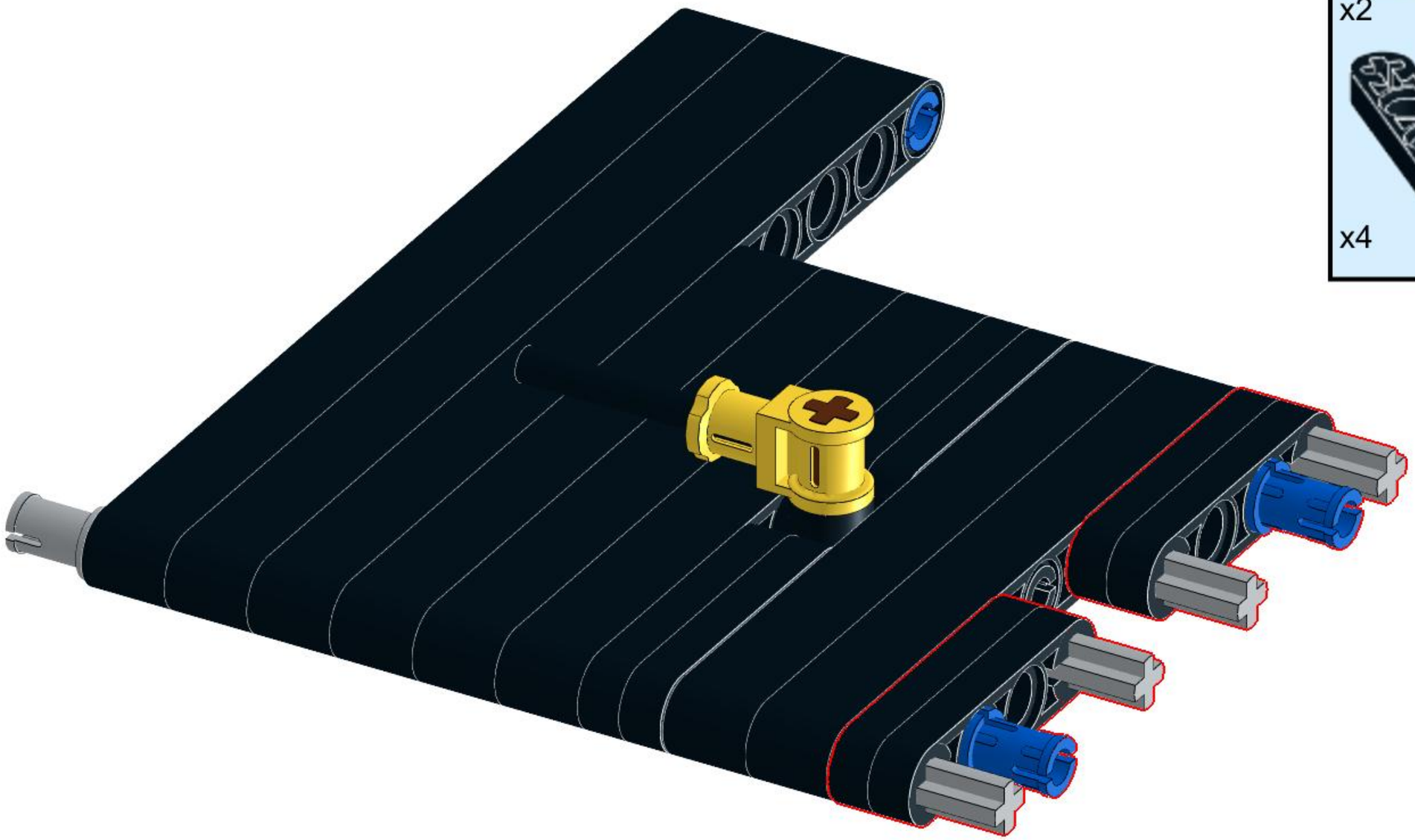

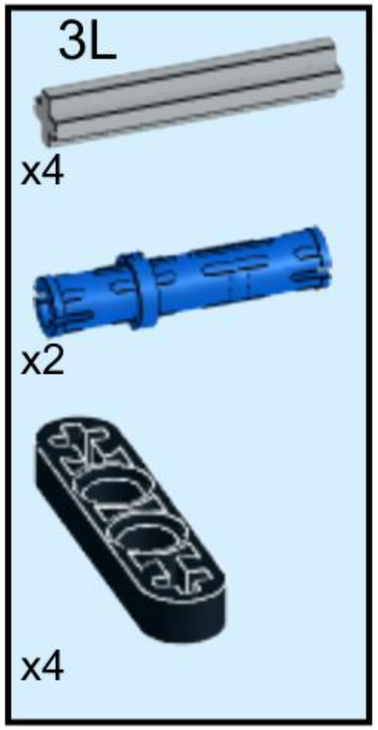

125

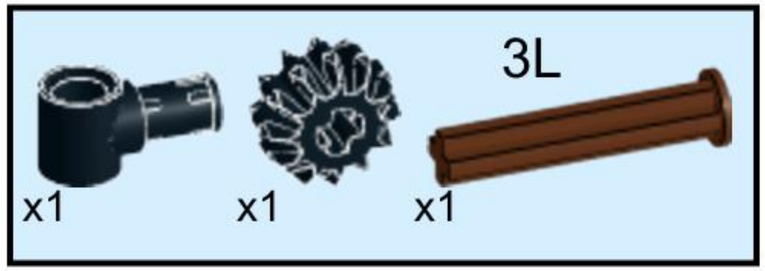

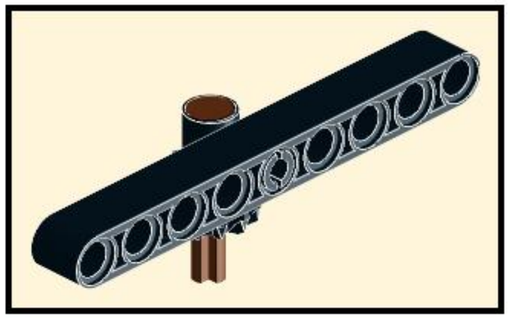

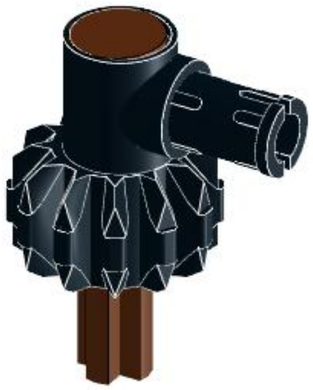

The unattached universal joint installed in a previous step should be attached to this axle, when this assembly is complete and placed in the module.

126

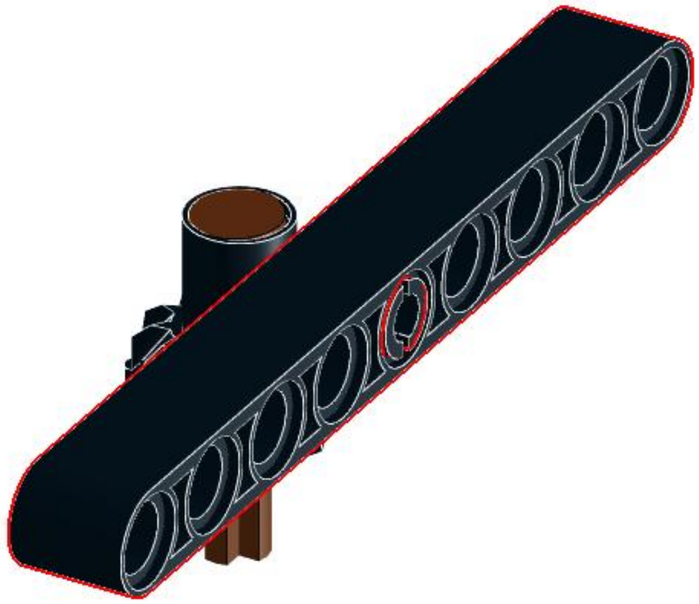

127

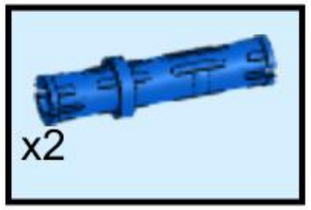

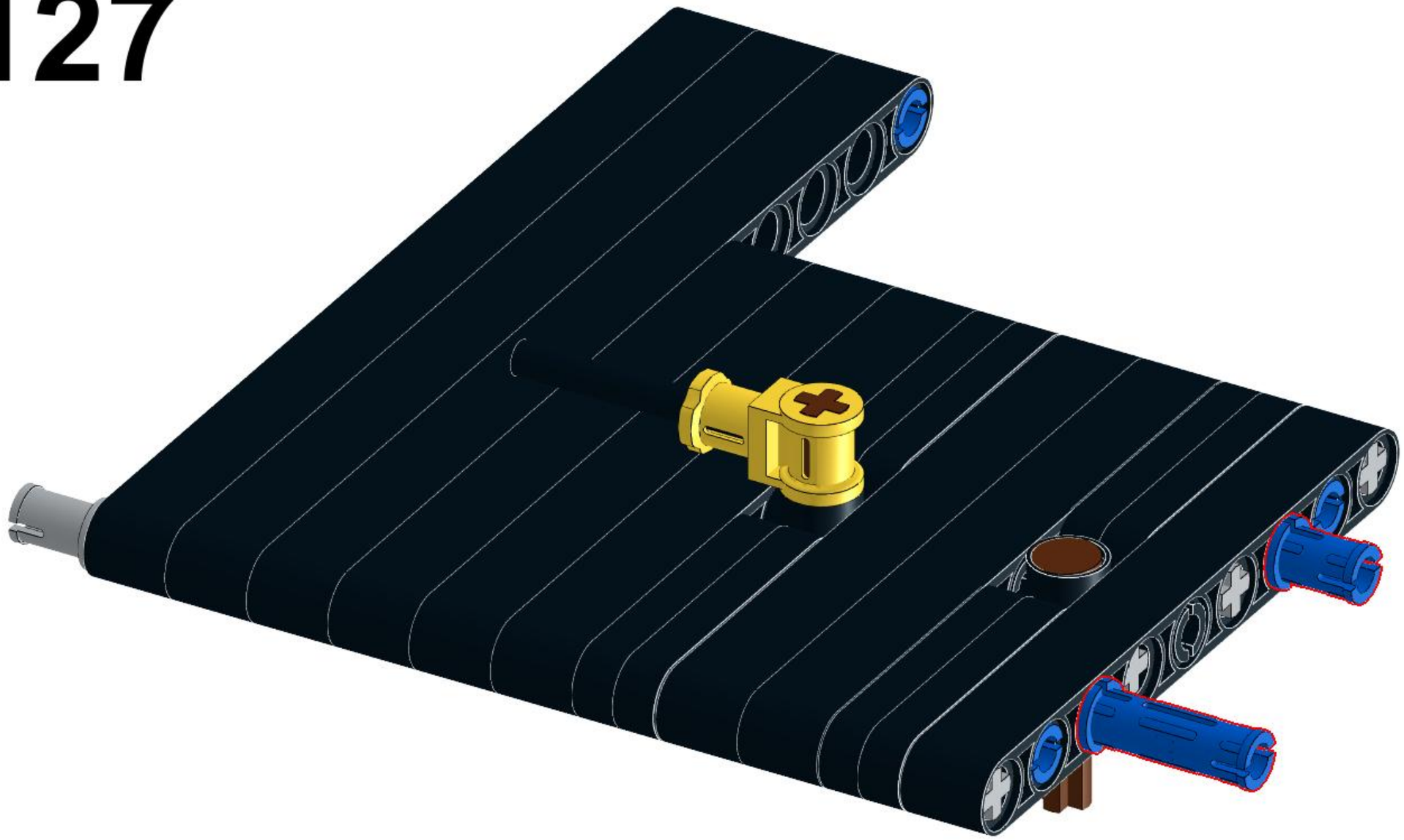

128

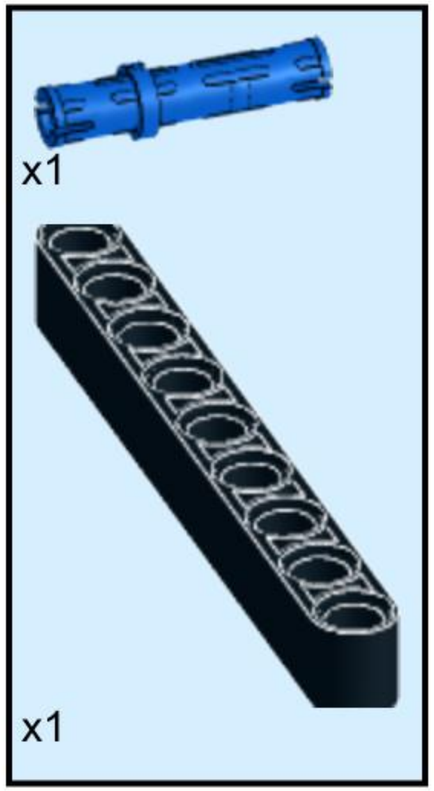

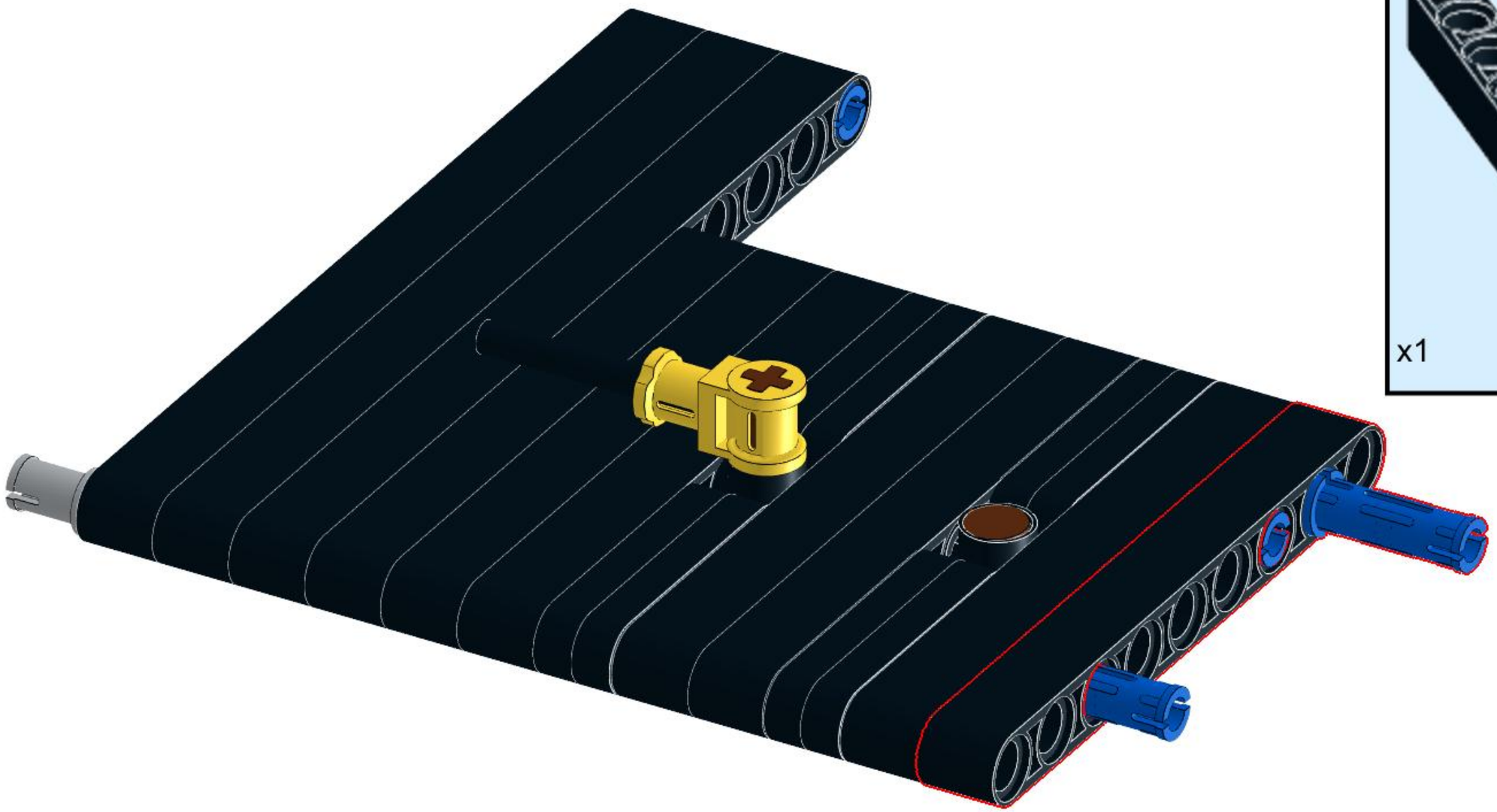

129

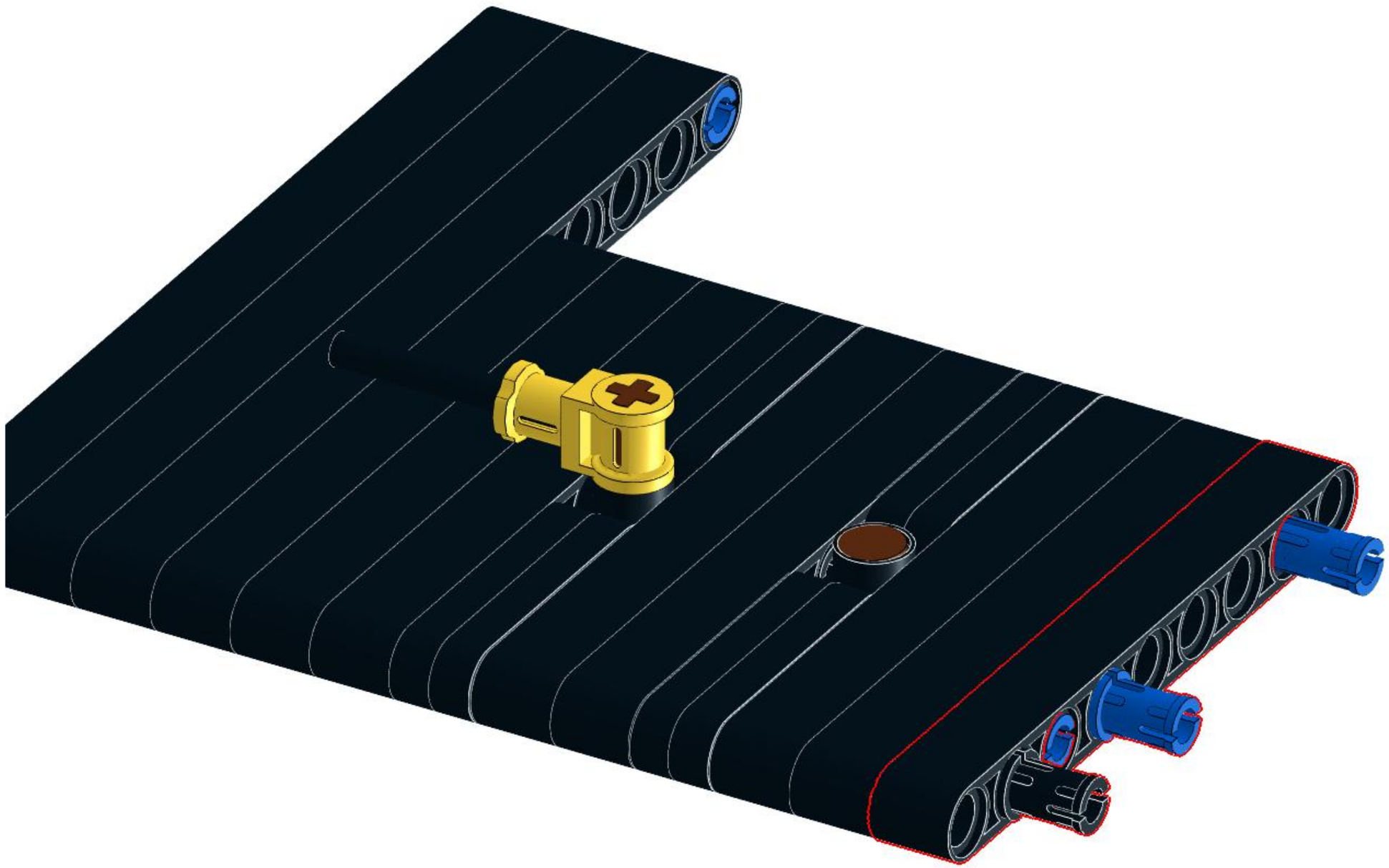

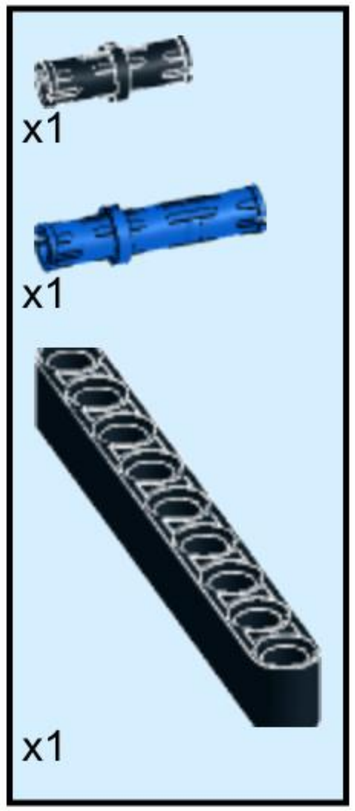

130

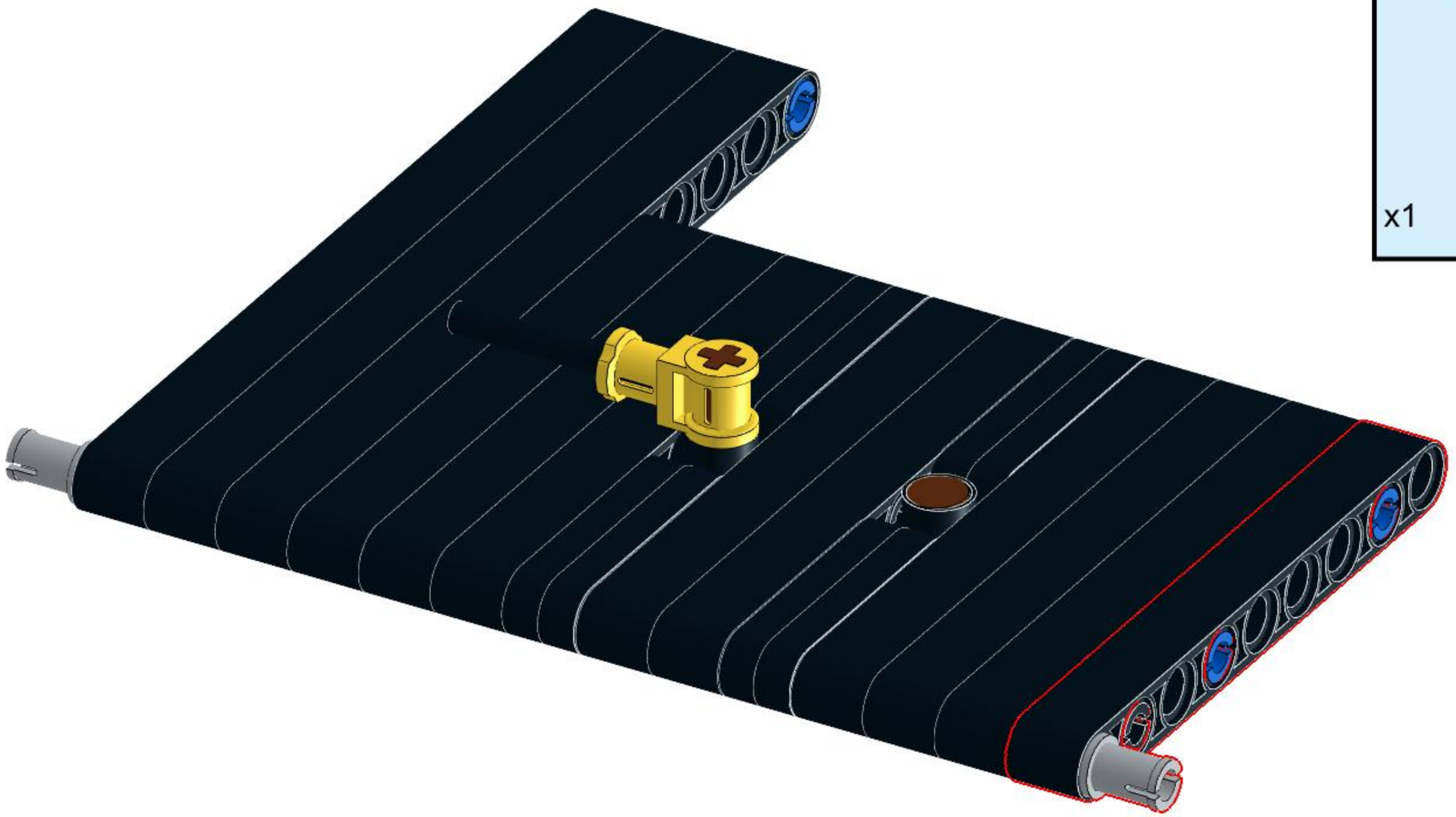

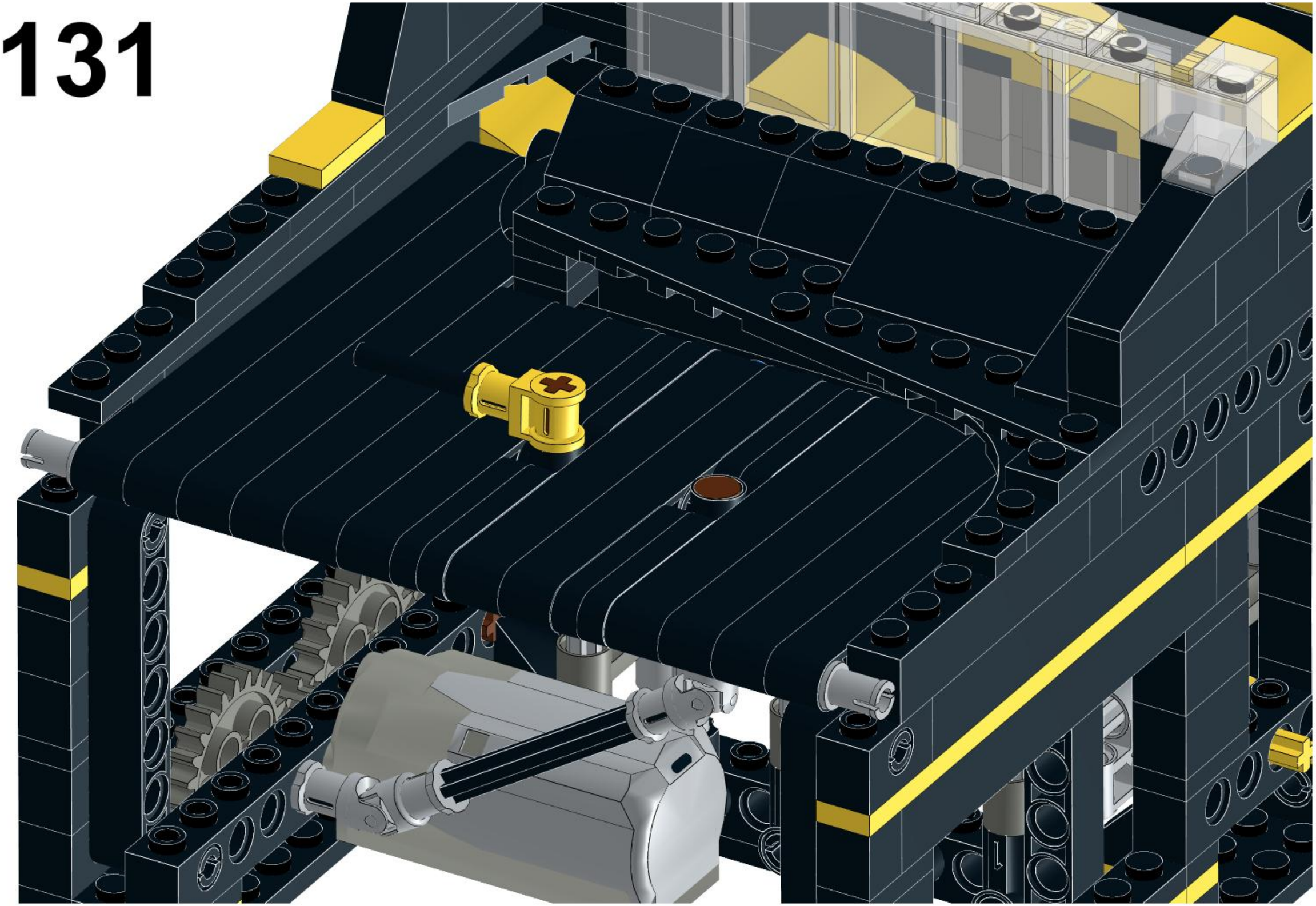

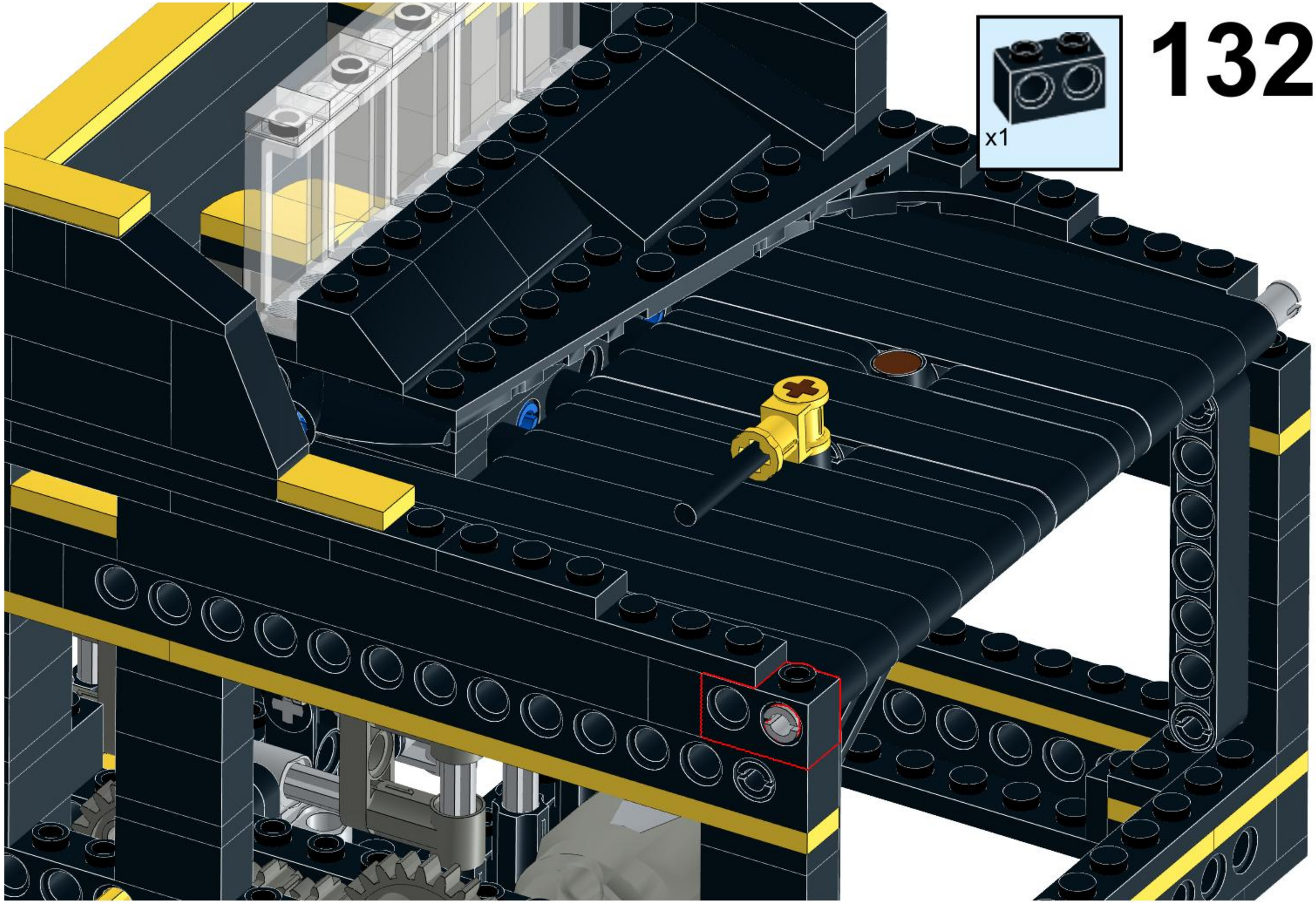
x1

133

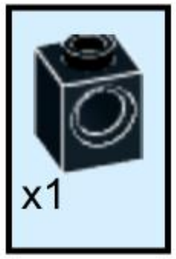

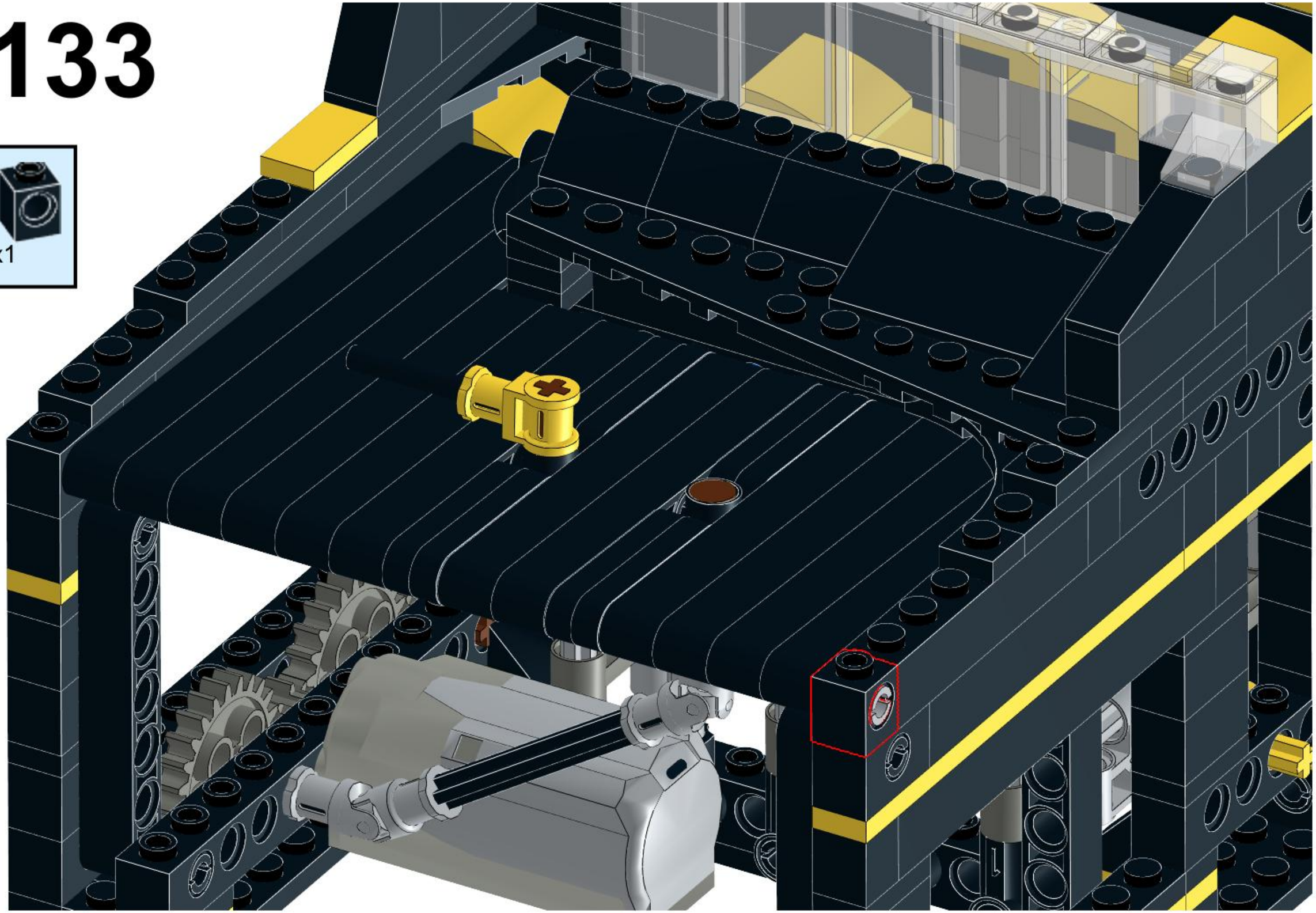

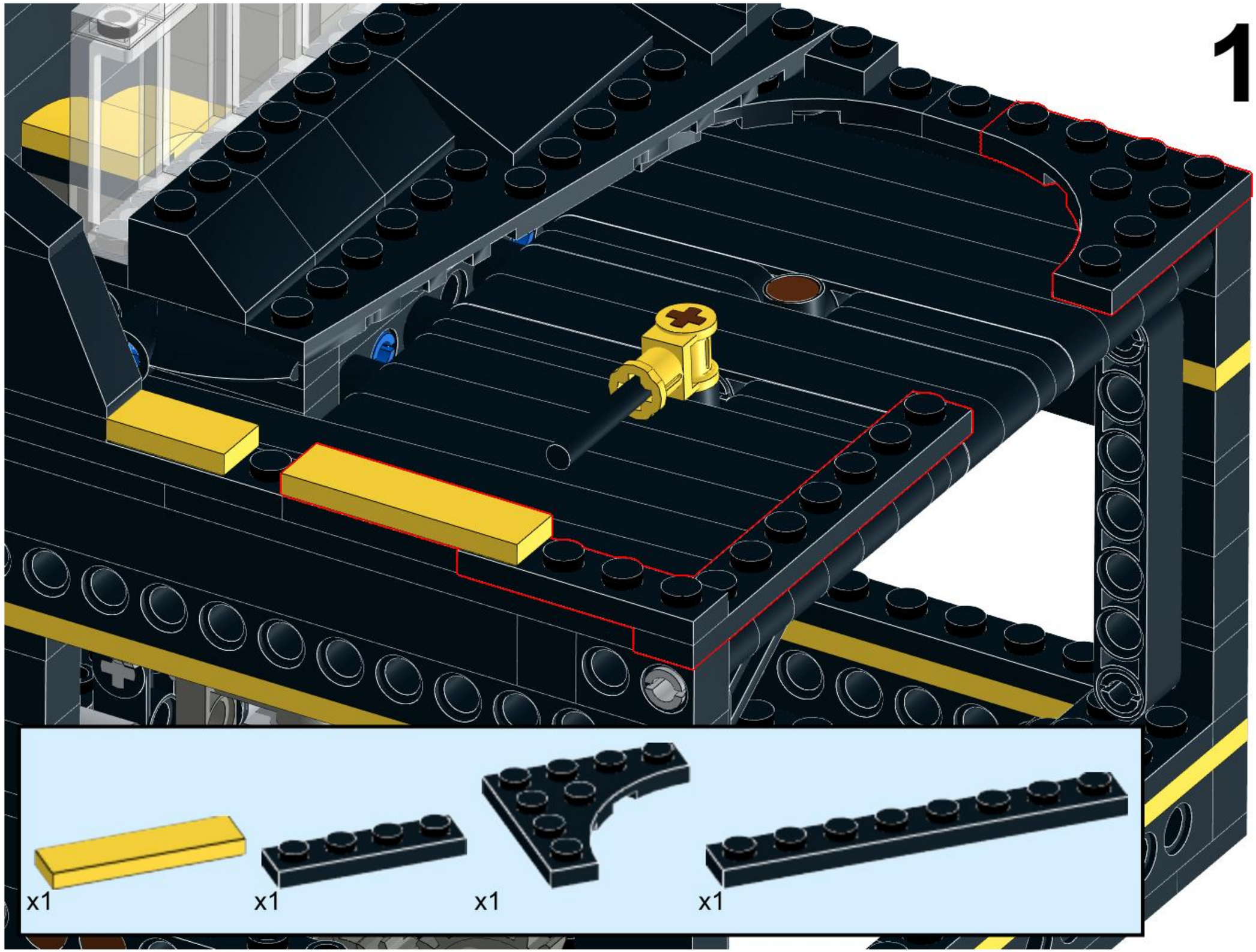
x1
x1
x1
x1

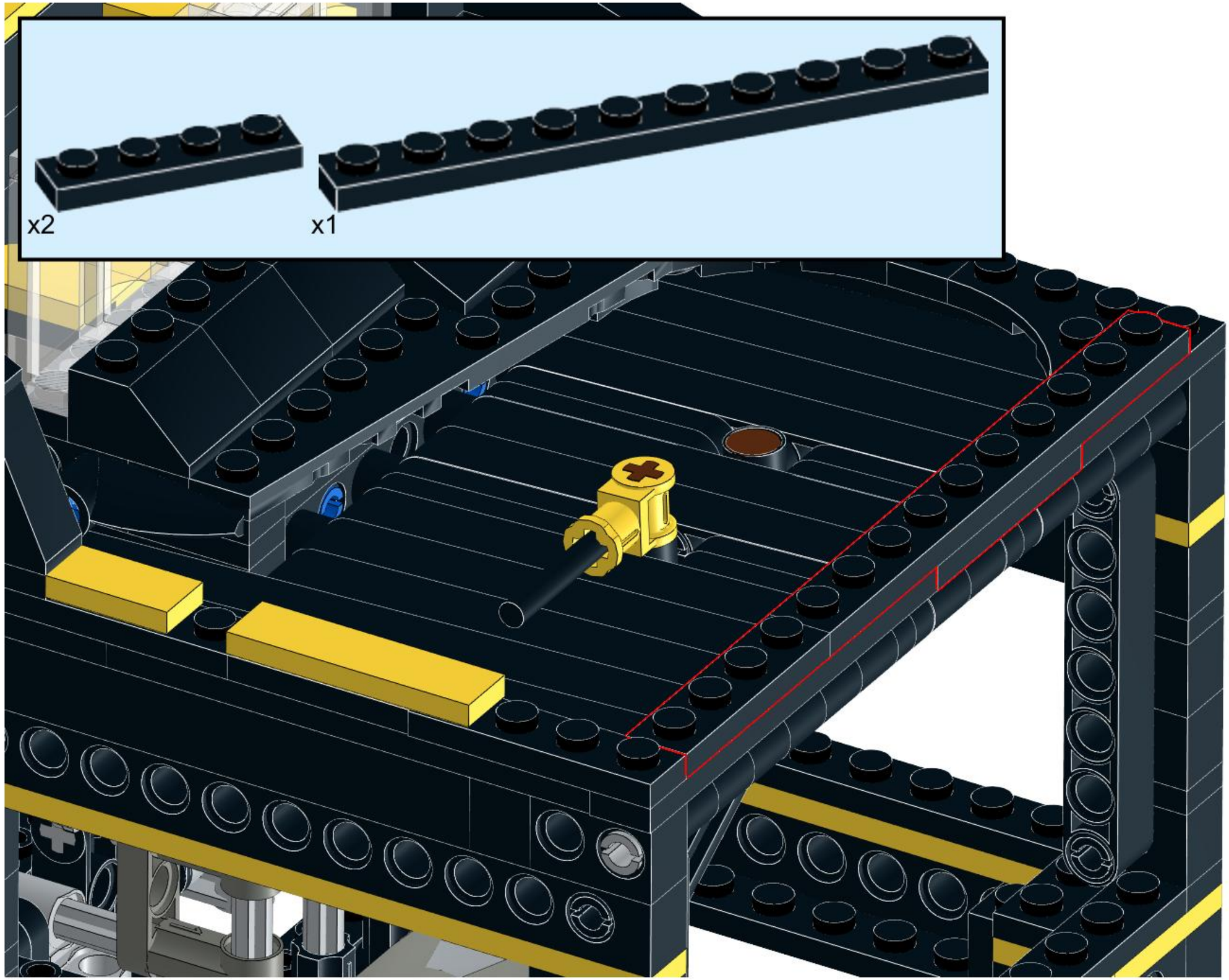
x2
x1

136

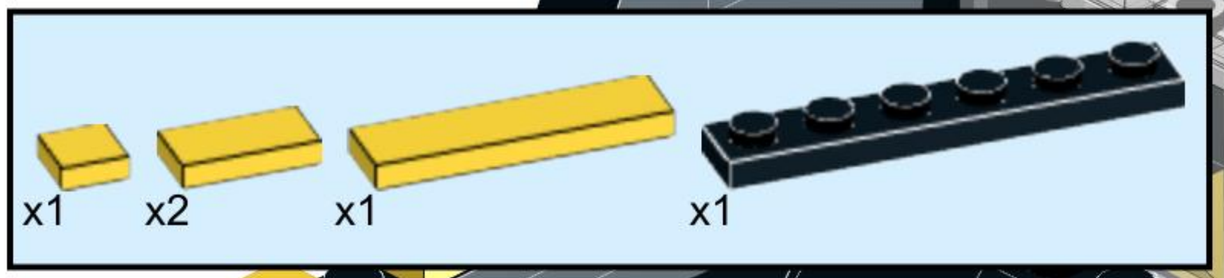

137

138

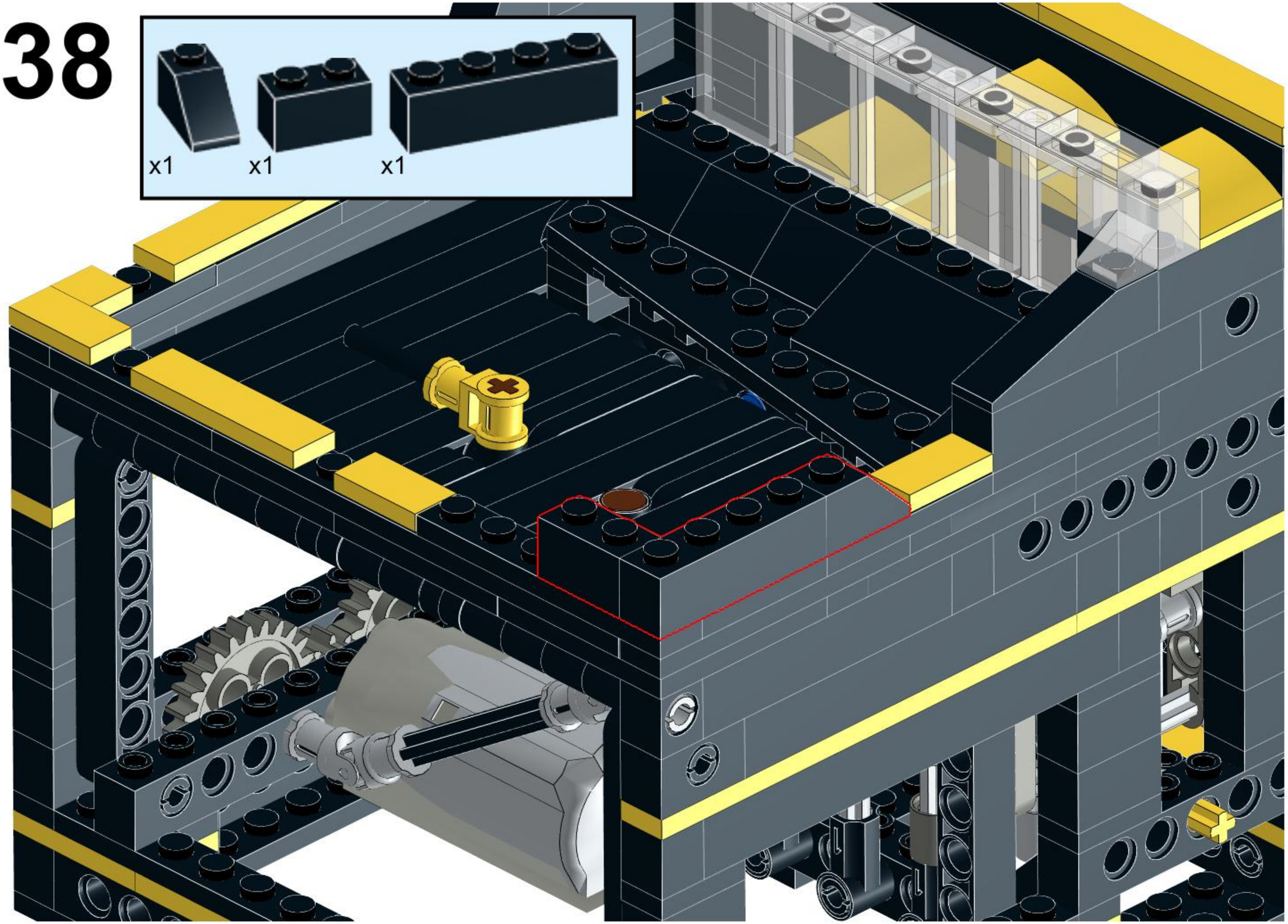

139

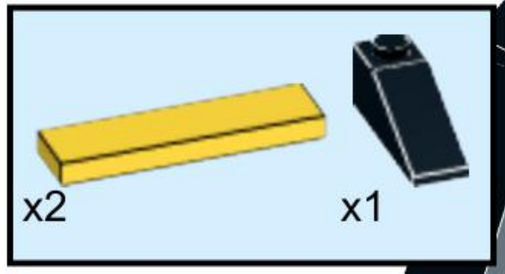

140

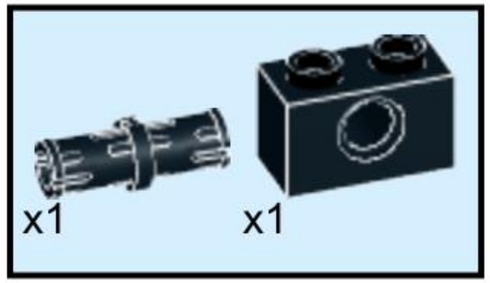

141

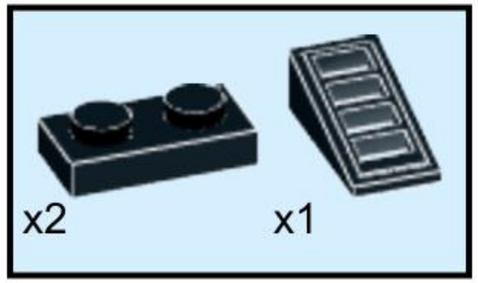

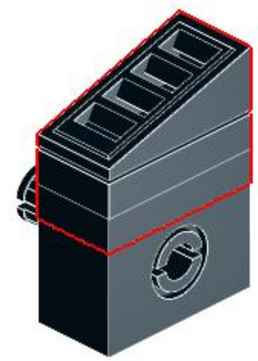

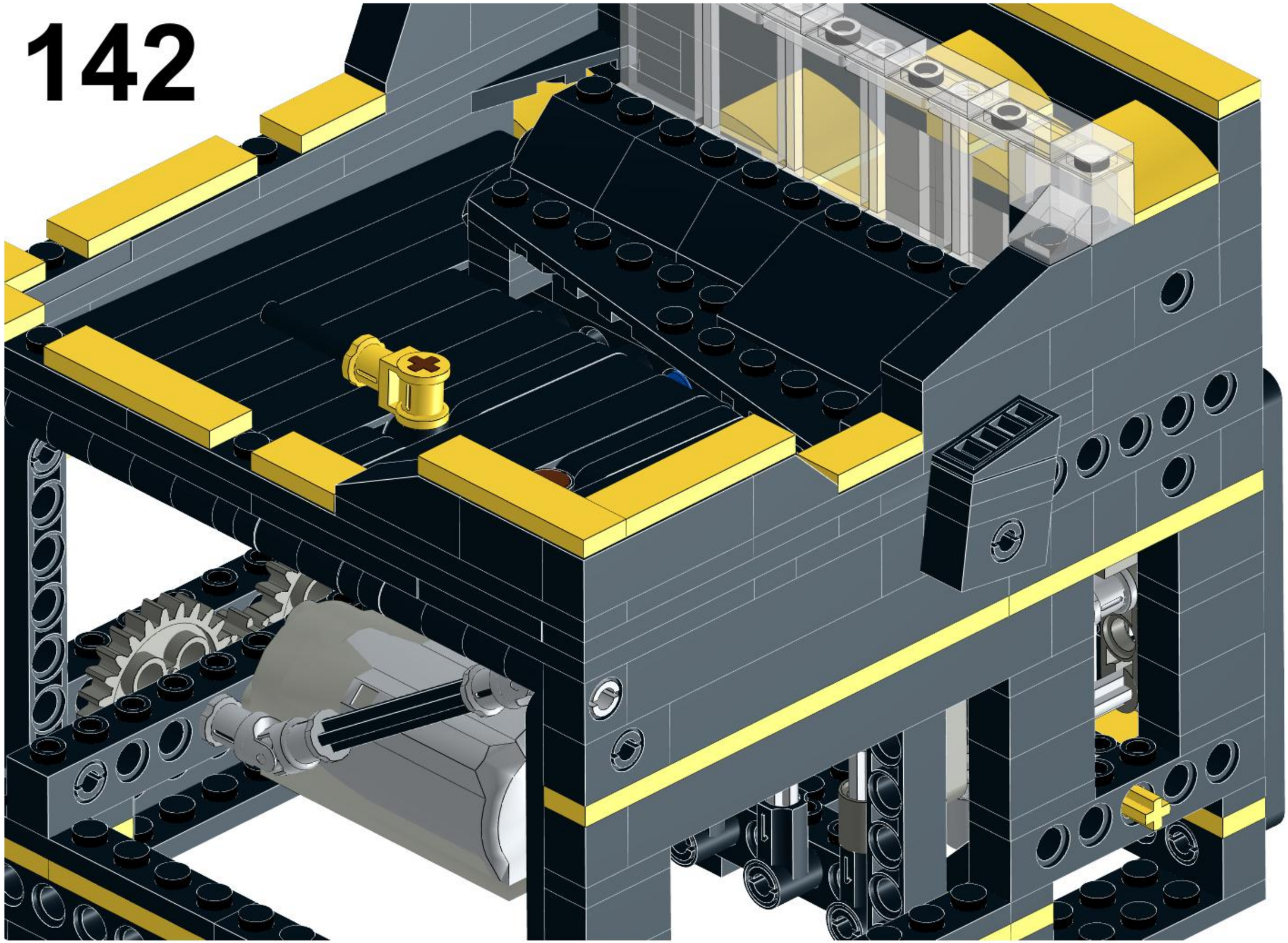

143

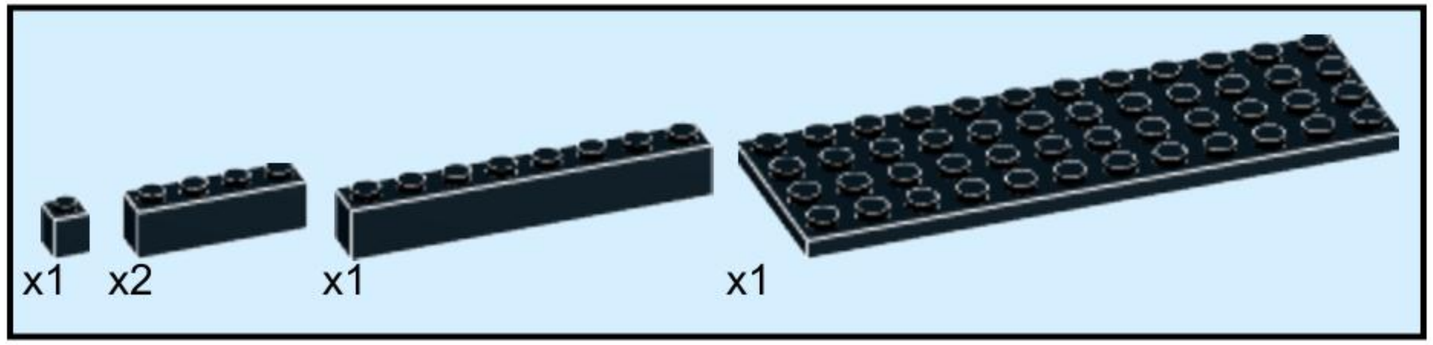

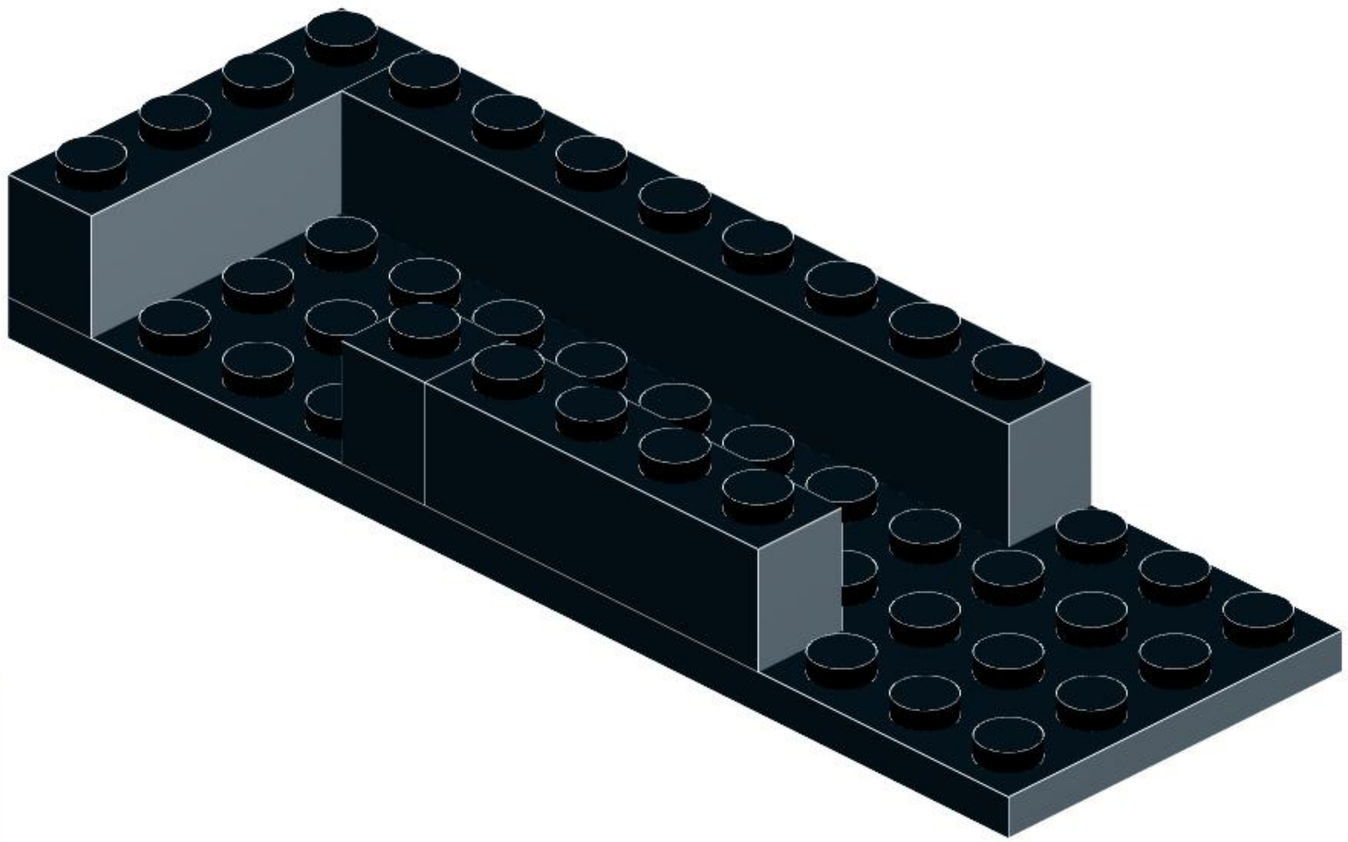

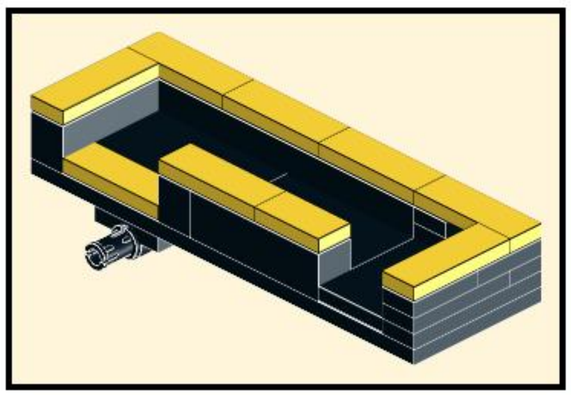

144

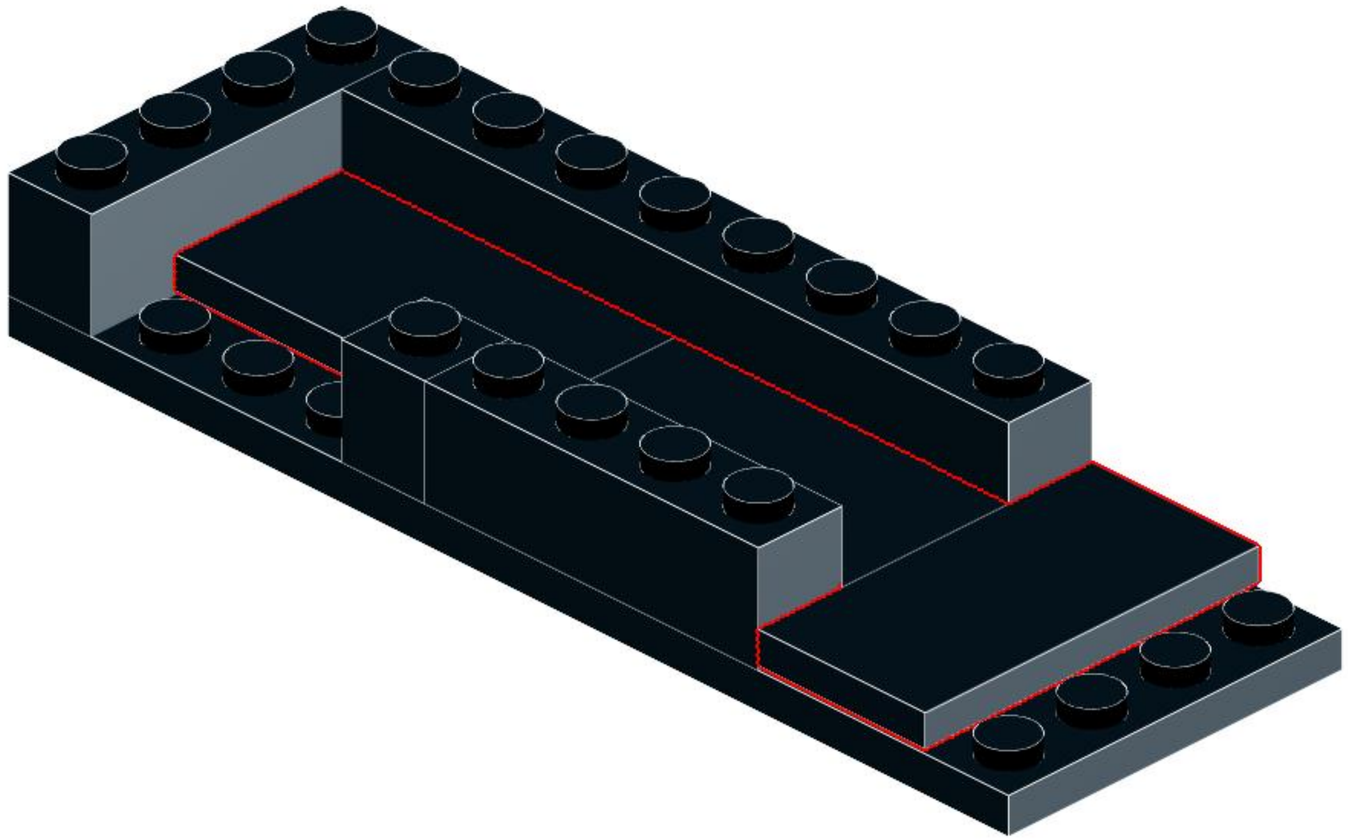

145

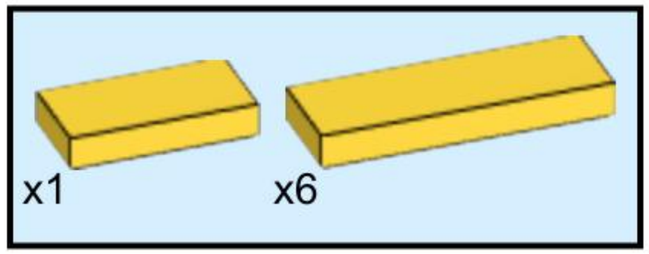

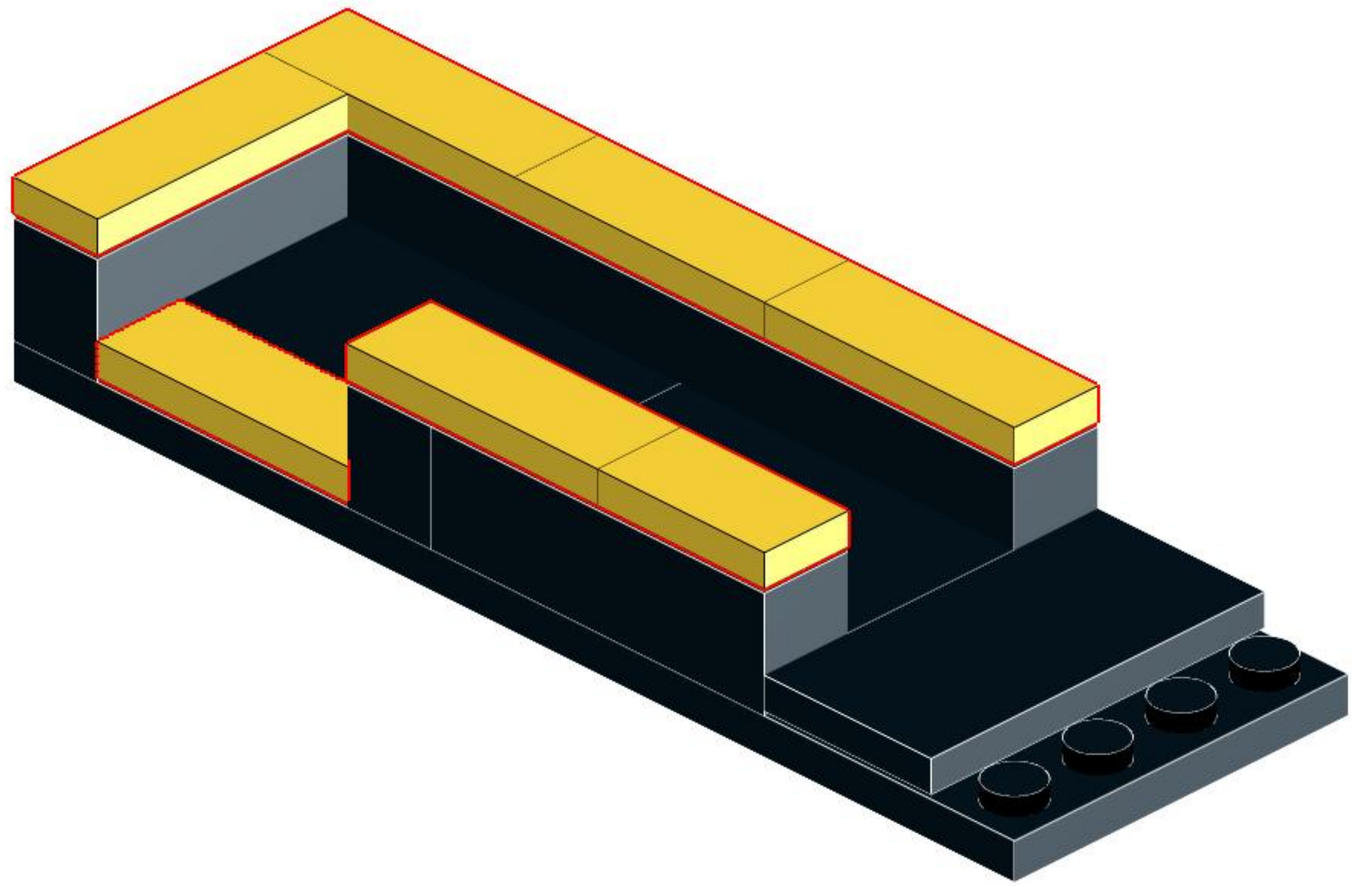

146

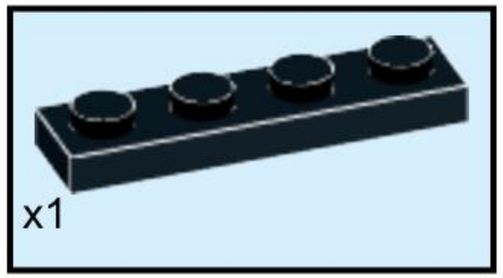

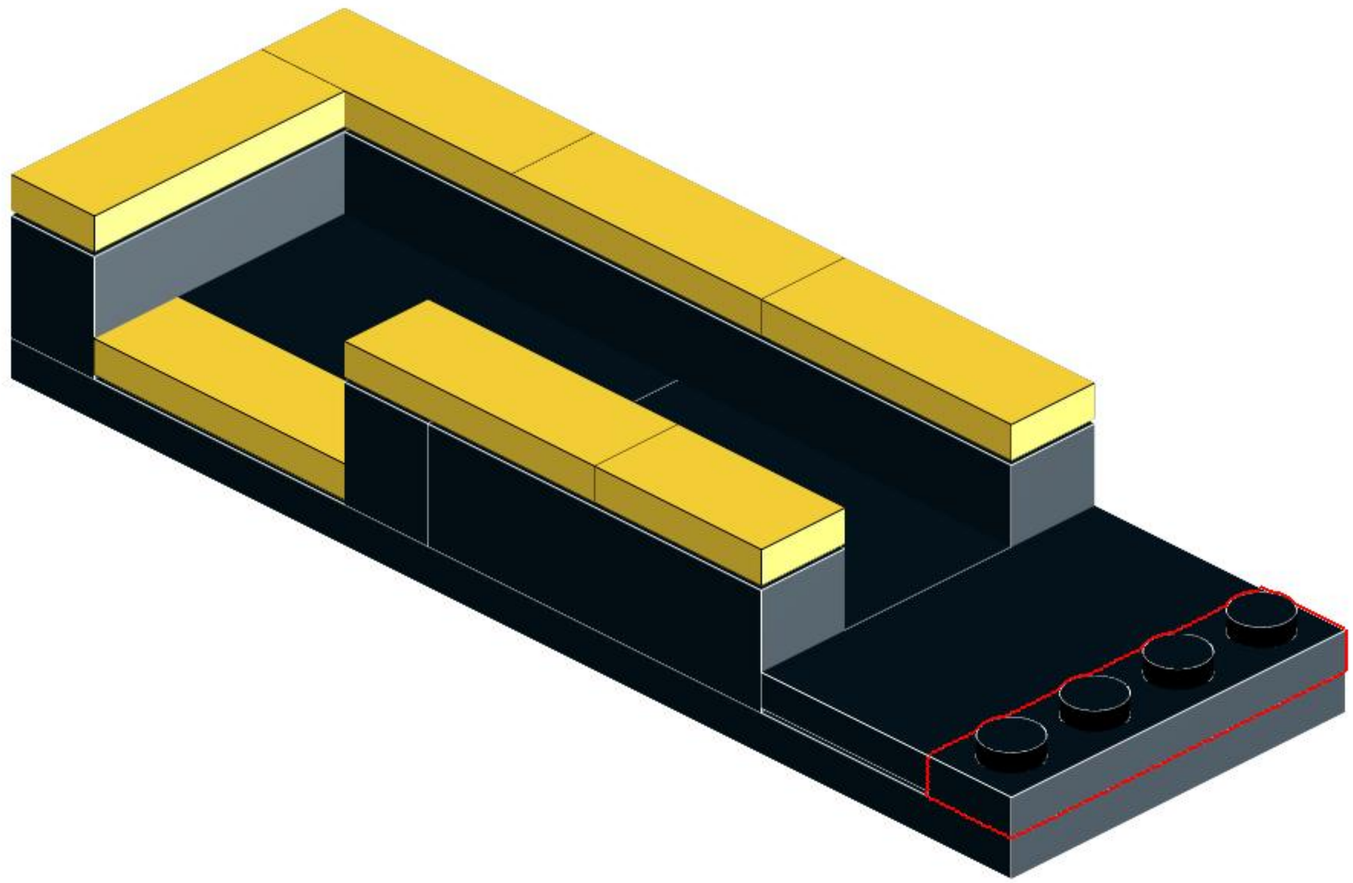

The following steps will complete this output ramp with balls returning back into the module. These parts can be installed mirrored, in the opposite direction, for an output ramp that delivers balls to the next module in a circuit.

147

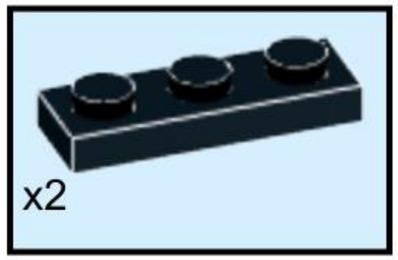

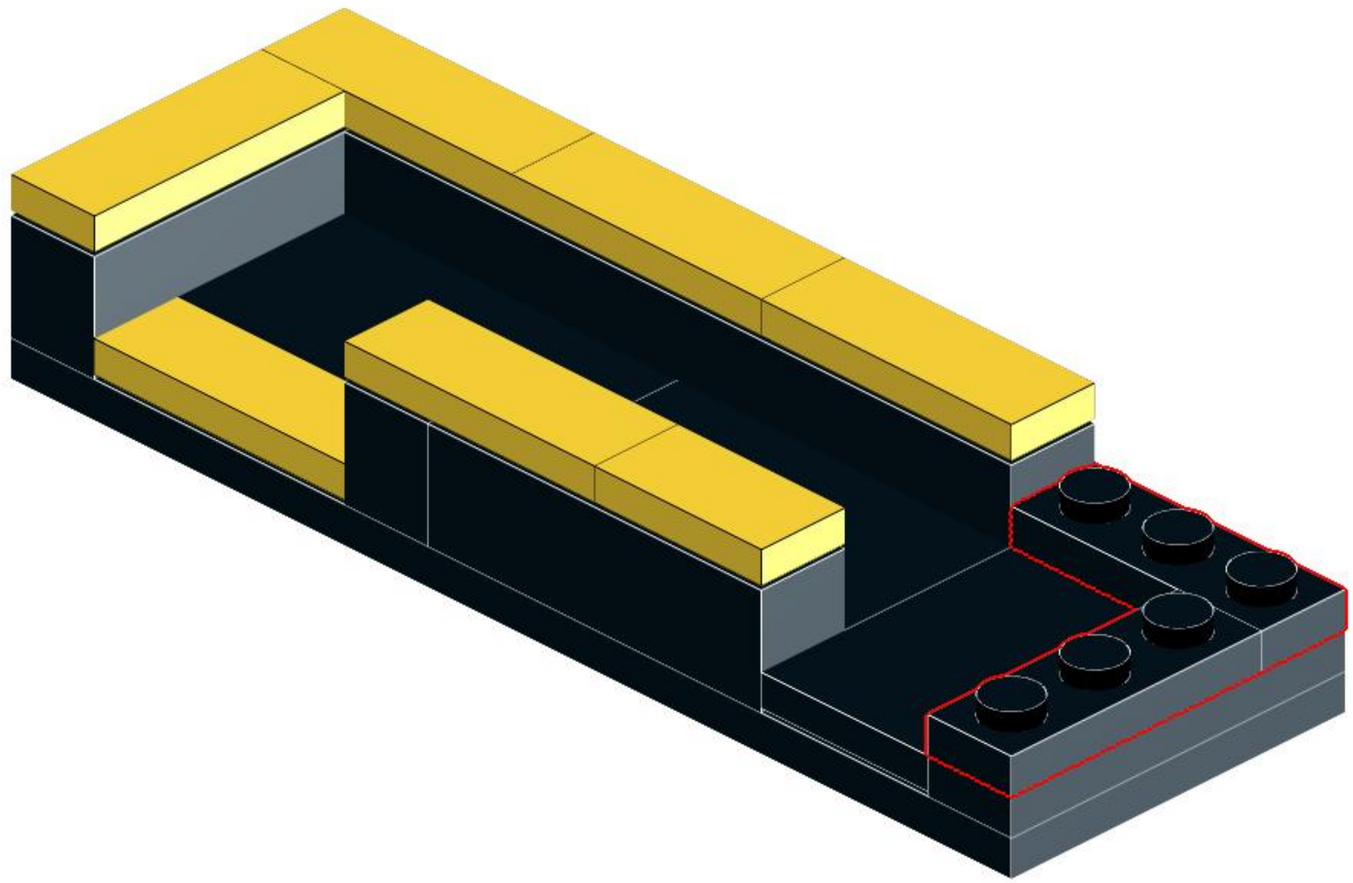

148

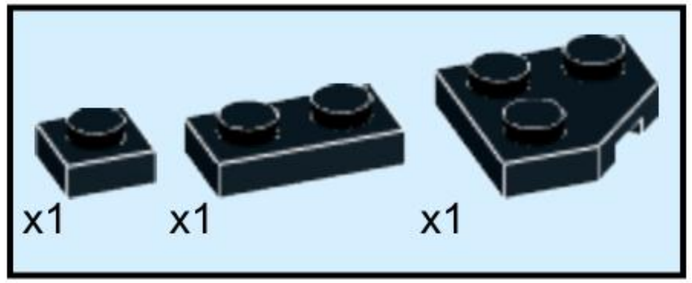

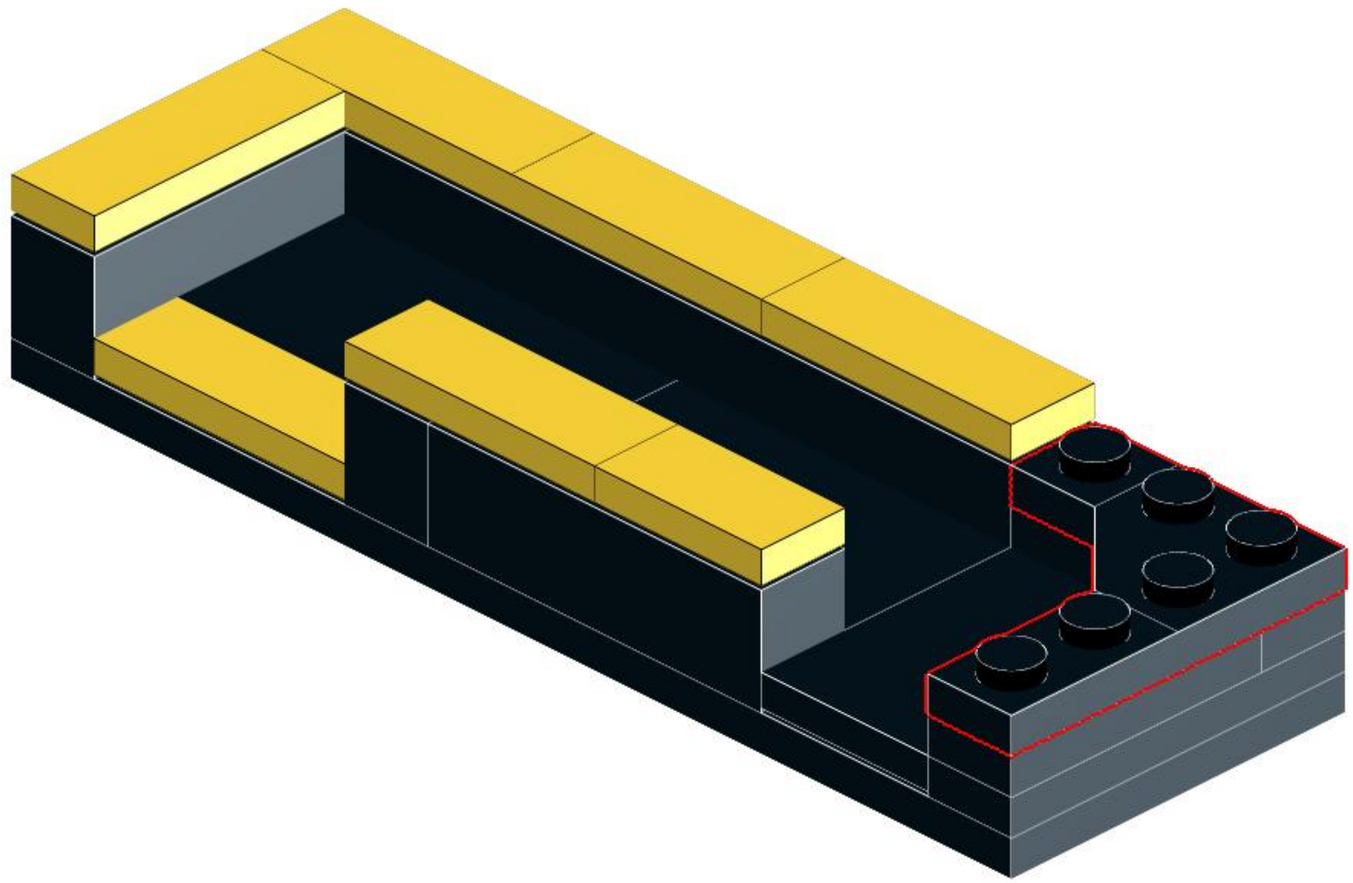

149

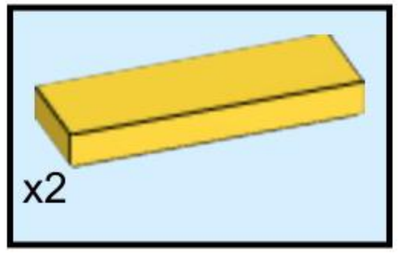

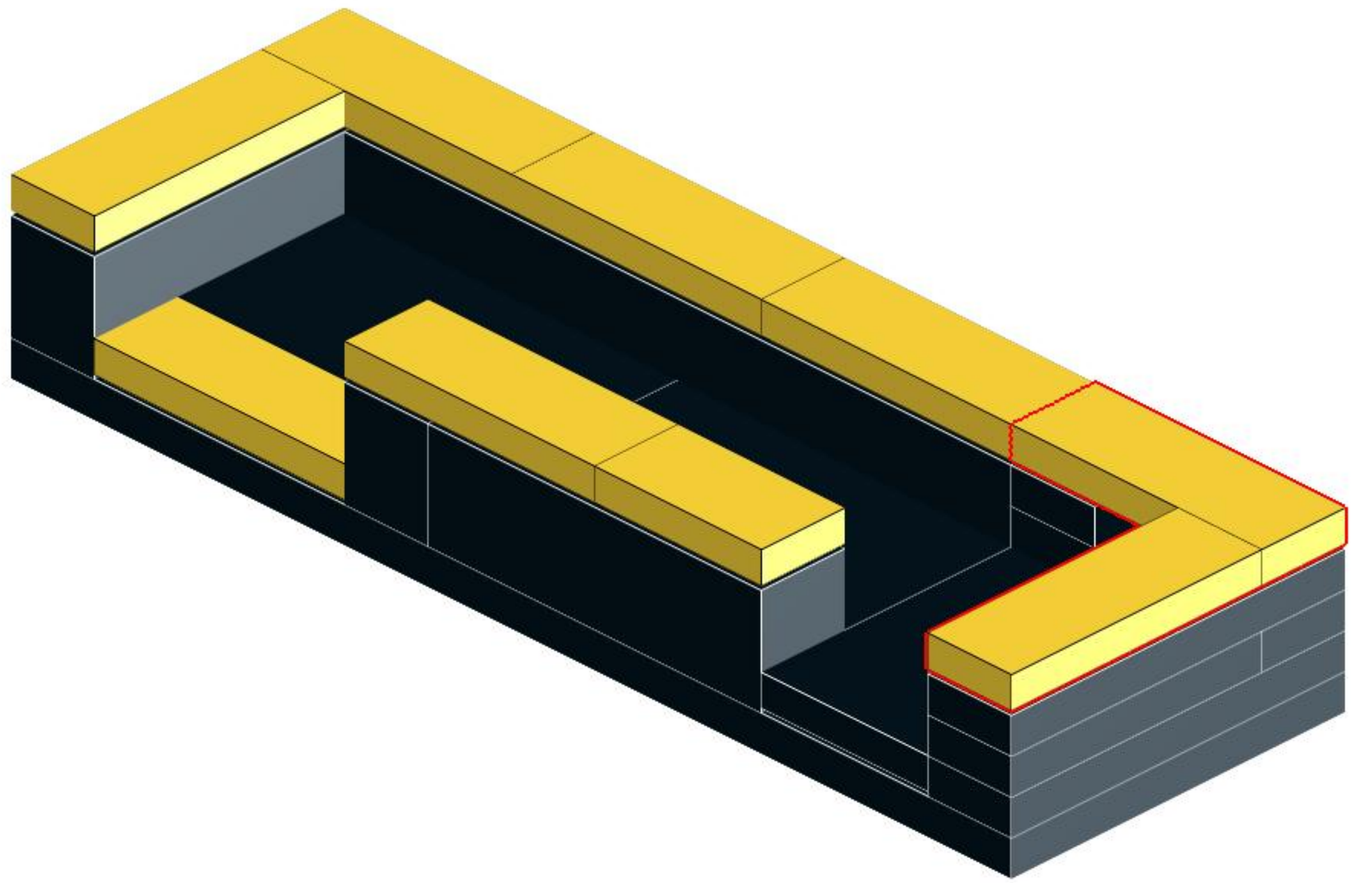

150

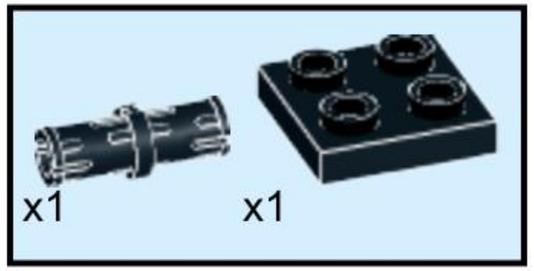

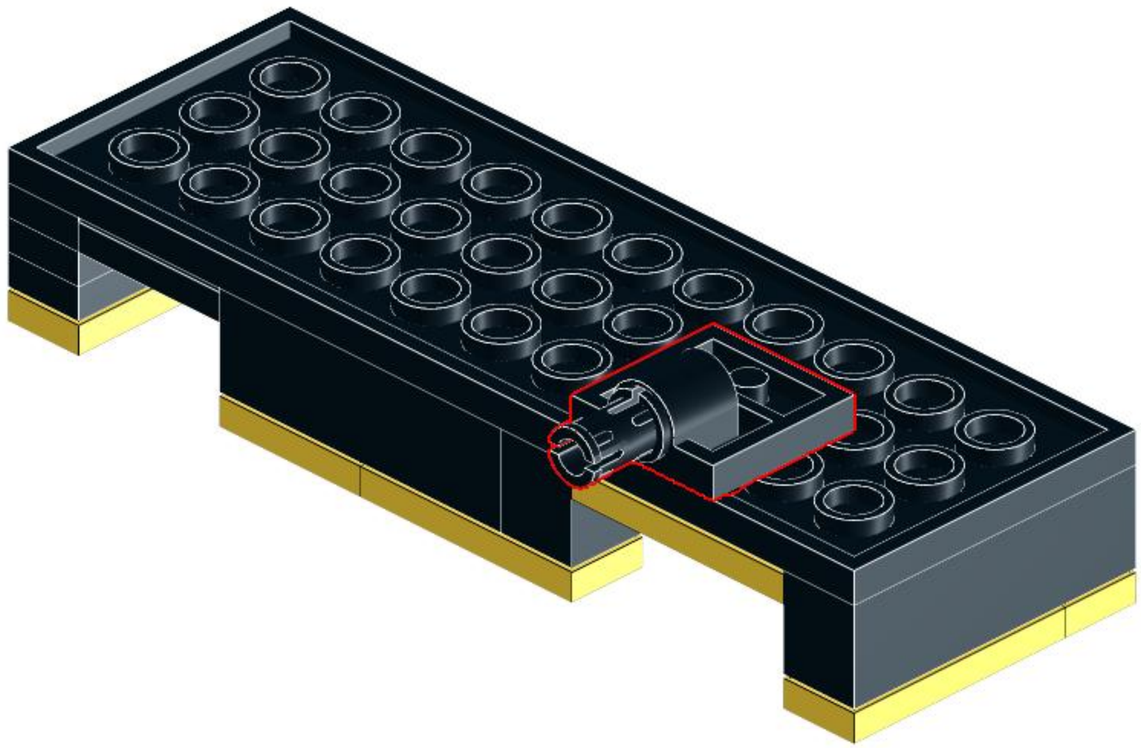

151

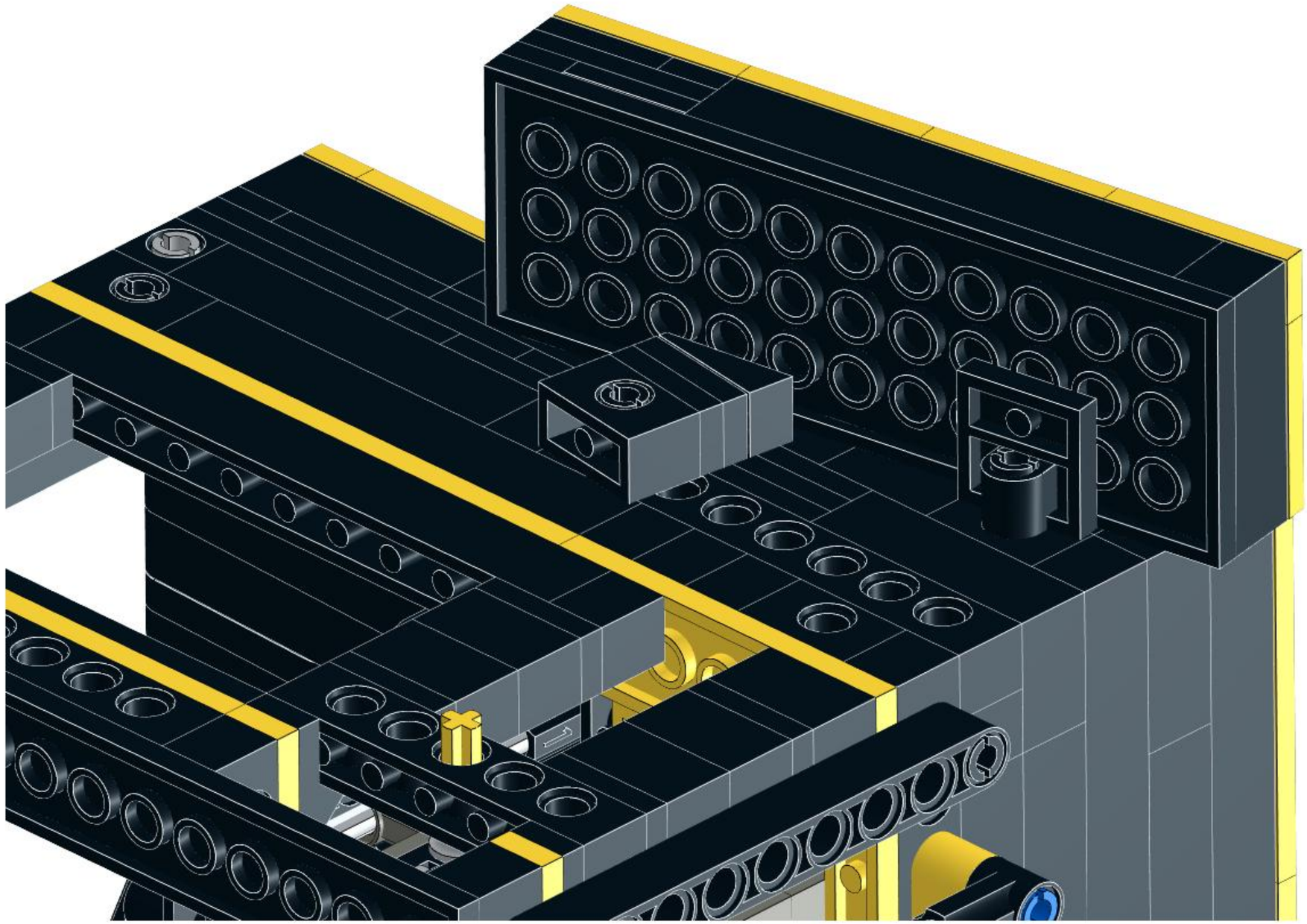

152

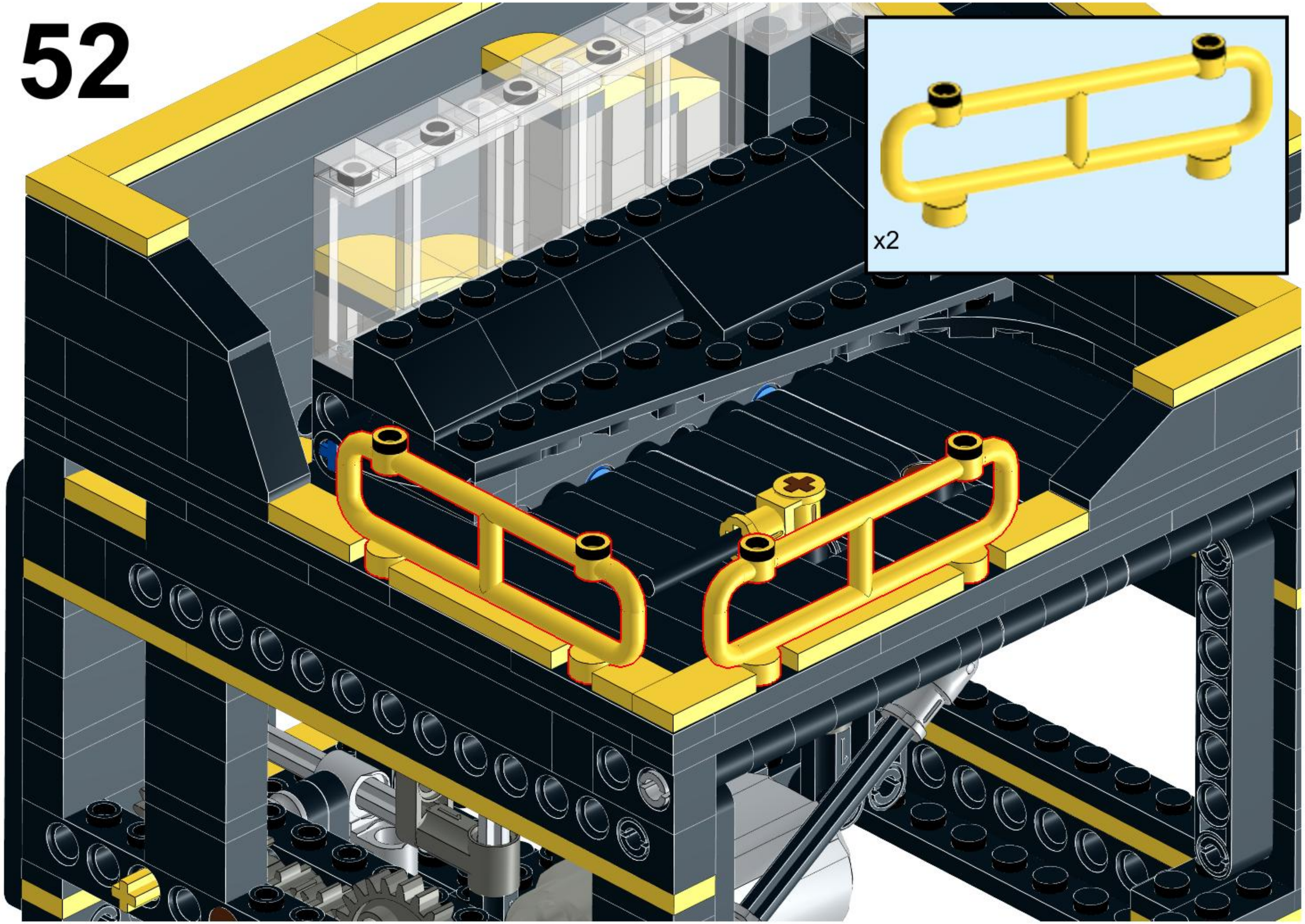

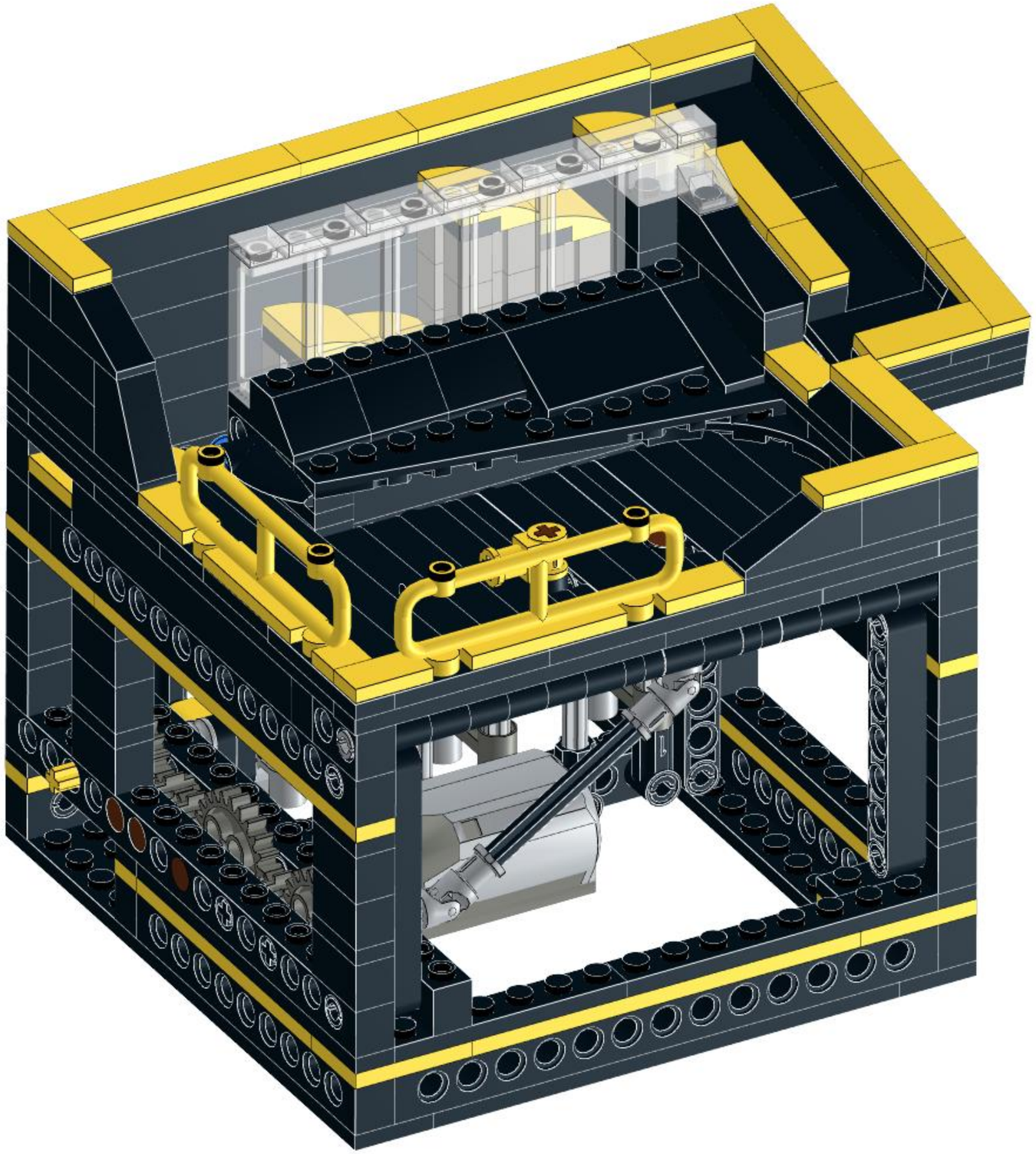

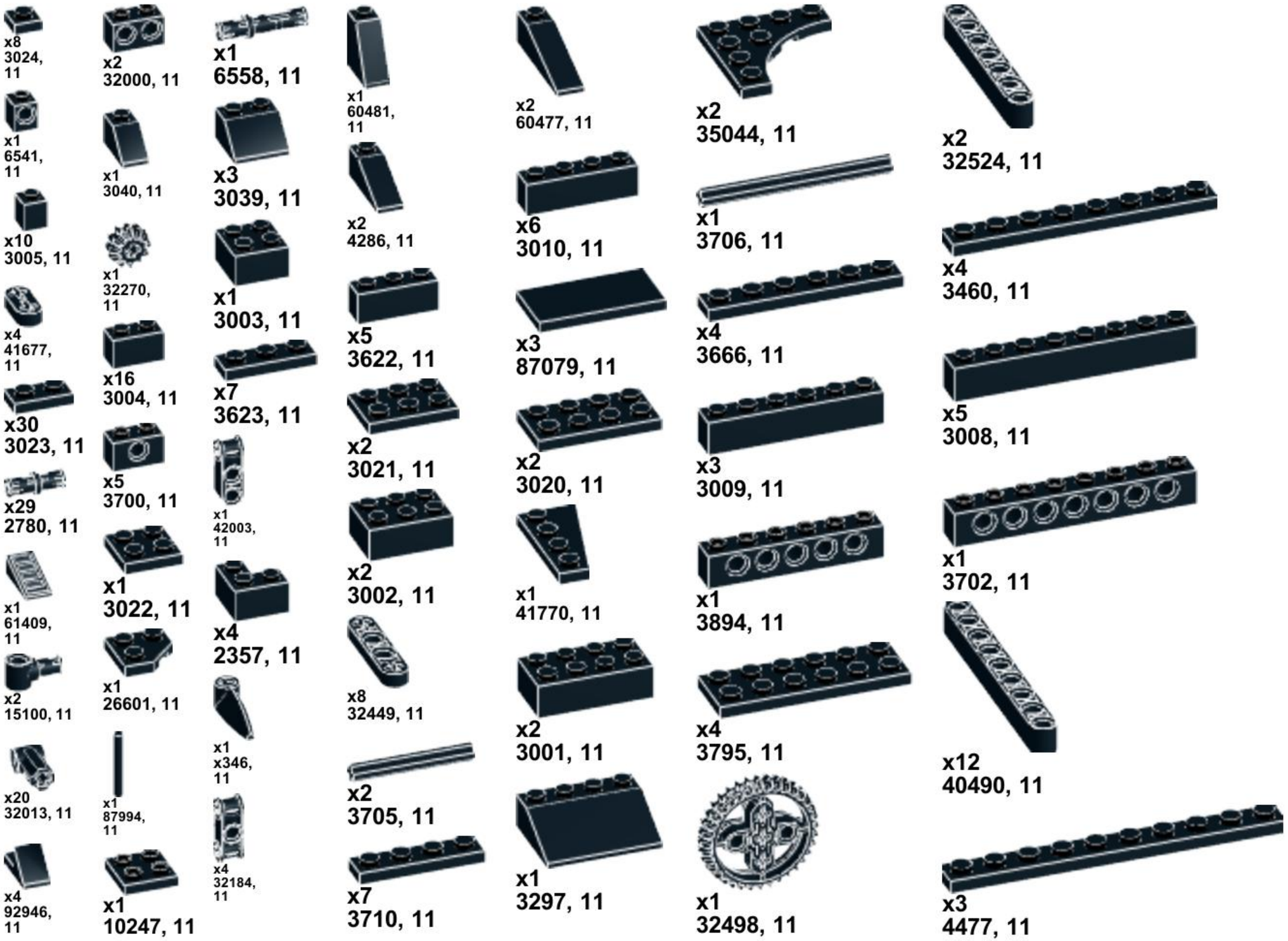
x8
3024, 11
x1
6541, 11
x10
3005, 11
x4
41677, 11
x30
3023, 11
x29
2780, 11
x1
61409, 11
x2
15100, 11
x20
32013, 11
x4
92946, 11
x2
32000, 11
x1
3040, 11
x1
32270, 11
x16
3004, 11
x5
3700, 11
x1
3022, 11
x1
26601, 11
x1
87994, 11
x1
10247, 11
x1
6558, 11
x3
3039, 11
x1
3003, 11
x7
3623, 11
x1
42003, 11
x4
2357, 11
x1
x346, 11
x4
32184, 11
x1
60481, 11
x2
4286, 11
x5
3622, 11
x2
3021, 11
x2
3002, 11
x8
32449, 11
x2
3705, 11
x7
3710, 11
x2
60477, 11
x6
3010, 11
x3
87079, 11
x2
3020, 11
x1
41770, 11
x2
3001, 11
x1
3297, 11
x2
35044, 11
x1
3706, 11
x4
3666, 11
x3
3009, 11
x1
3894, 11
x4
3795, 11
x1
32498, 11
x2
32524, 11
x4
3460, 11
x5
3008, 11
x1
3702, 11
x12
40490, 11
x3
4477, 11

x2
6111, 11

x2
2730, 11

x1
6112, 11

x3
3895, 11

x1
2445, 11

x1
47397, 11

x1
3029, 11

x3
41239, 11

x2
32018, 11

x2
4282, 11

x5
3703, 11

x2
2465, 11

x3
10928,
85

x20
32013, 85

x10
6632, 85

x20
90258, 85

x3
3648, 85

x2
62519,
86

x2
4265c,
86

x15
3713, 86

x4
62520,
86

x2
3673, 86

x5
44809, 86

x13
4519, 86

x5
6553,
86

x20
44294, 86

x1
58120c01, 86

x5
24316, 88

x1
3070b,
3

x6
3069b, 3

x2
3023, 3

x1
32039, 3

x8
15068, 3

x1
4519, 3

x10
63864, 3

x2
3021, 3

x4
2431, 3

x2
3710, 3

x1
32073, 3

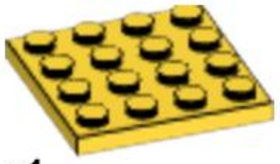
x1
3031, 3

x2
6636, 3

x1
3795, 3

x2
2486, 3

x2
3460, 3

x2
40490, 3

x3
4477, 3

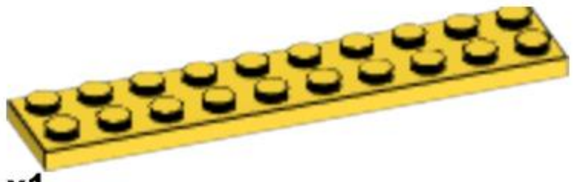

x1
3832, 3

x1
60479, 3

x1
43093, 7

x27
6558, 7

x2
3070b,
12

x1
54200,
12

x5
3069b, 12

x1
3004, 12

x5
87544, 12