Version 1.3

16 X 16 STEPPER

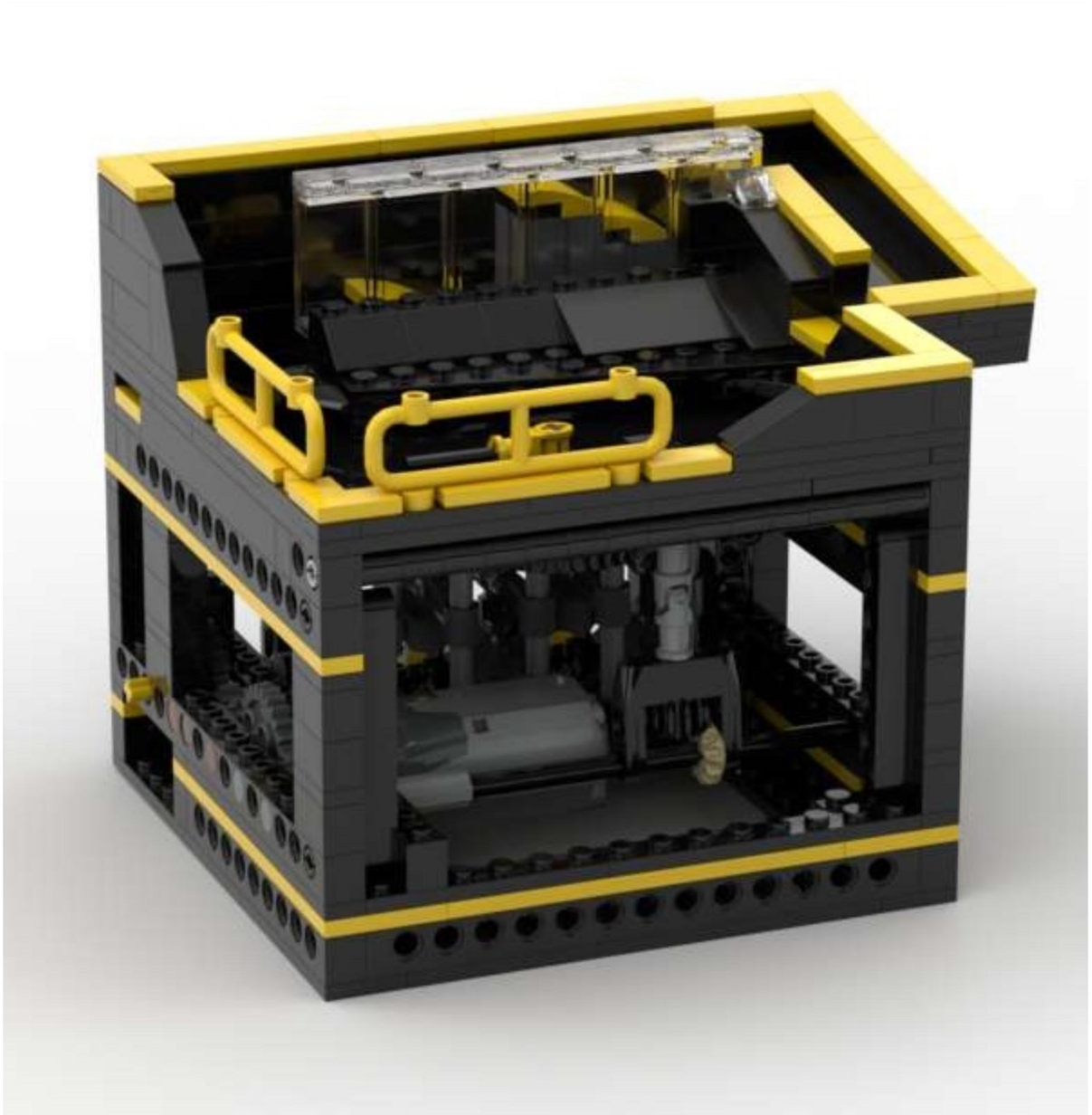

Copyright 2018 Ryk Field,
Attribution-NonCommercial 4.0 International (CC BY-NC 4.0)
https://creativecommons.org/licenses/by-nc/4.0/

REF03

This "16x16 Stepper" GBC was built as a contribution toward the greatballpit.com Community Module Challenge in 2018.

The visual design is heavily influenced by the 2015 stackable Brickworld Chicago module.

The steps are driven by an Akiyuki mechanism.

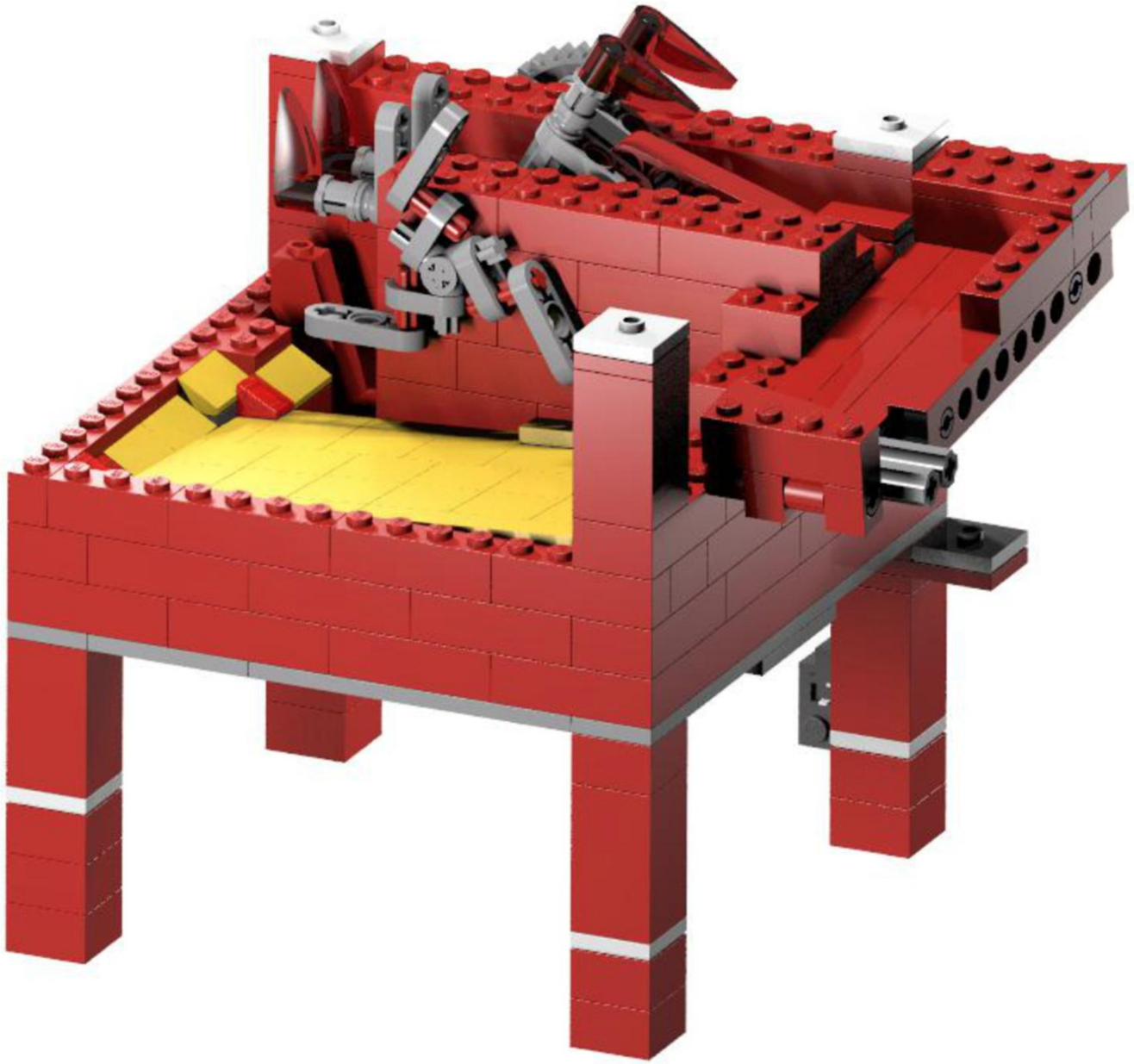

Brickworld Chicago 2015 module by Bryan Bonahoom

1

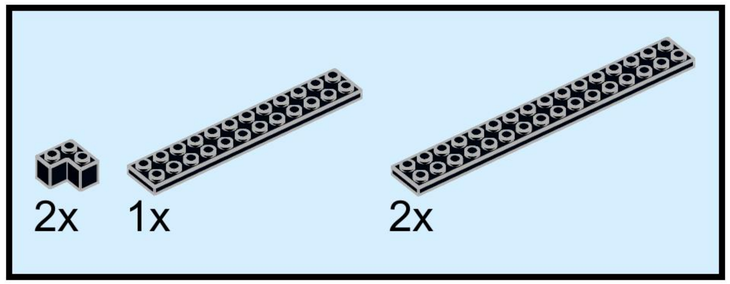

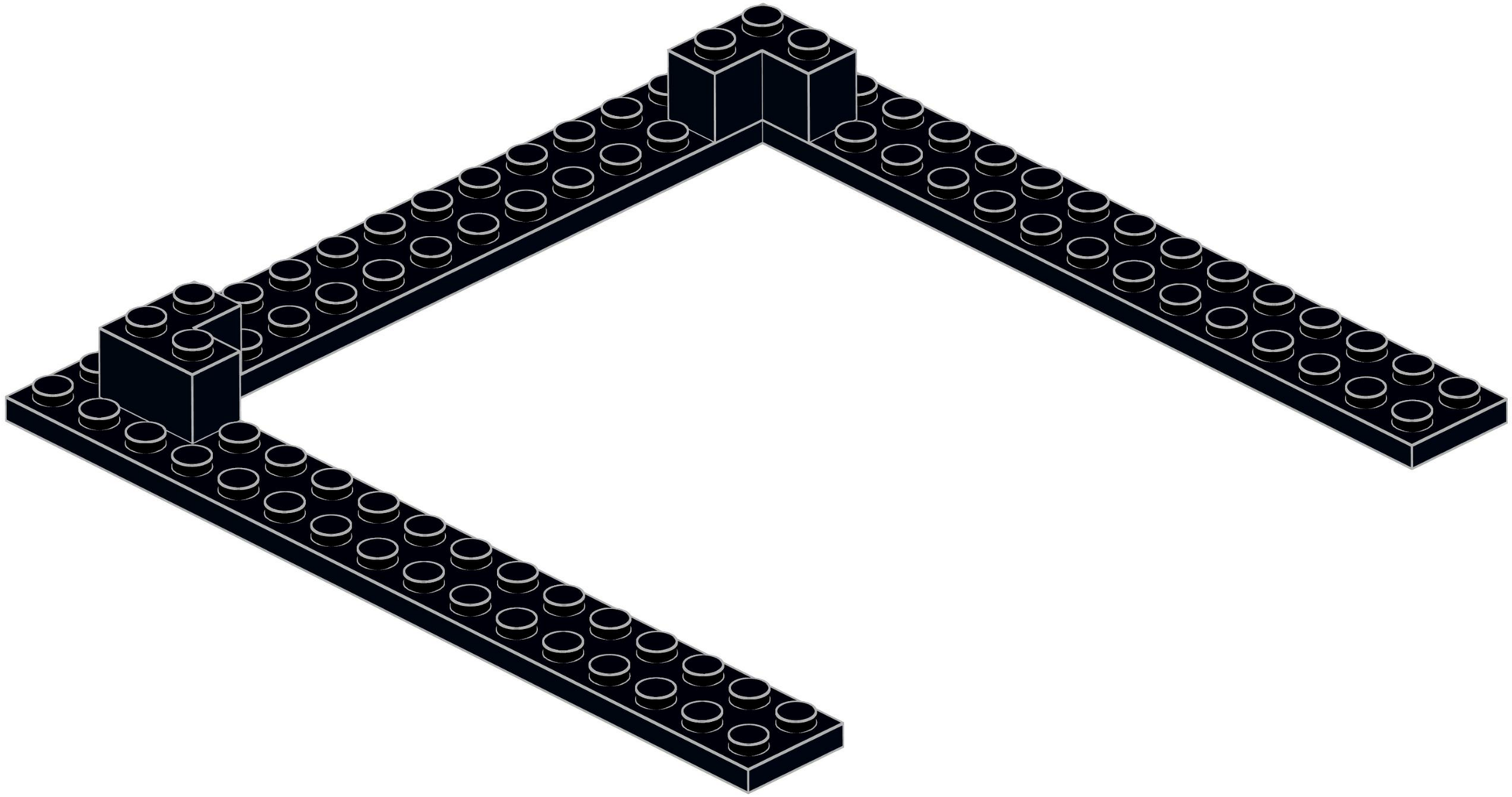

2

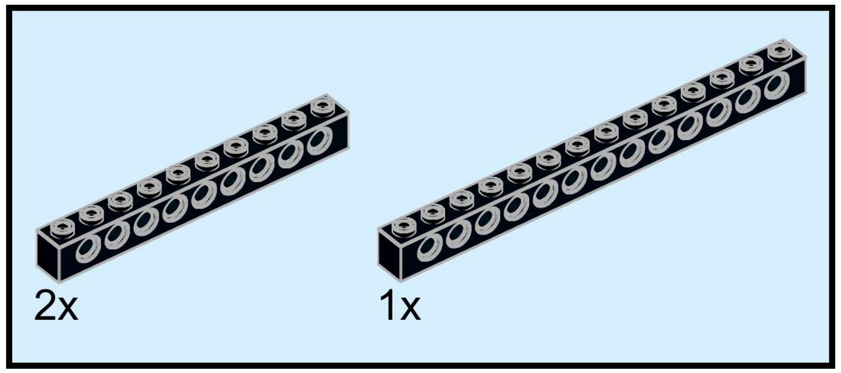

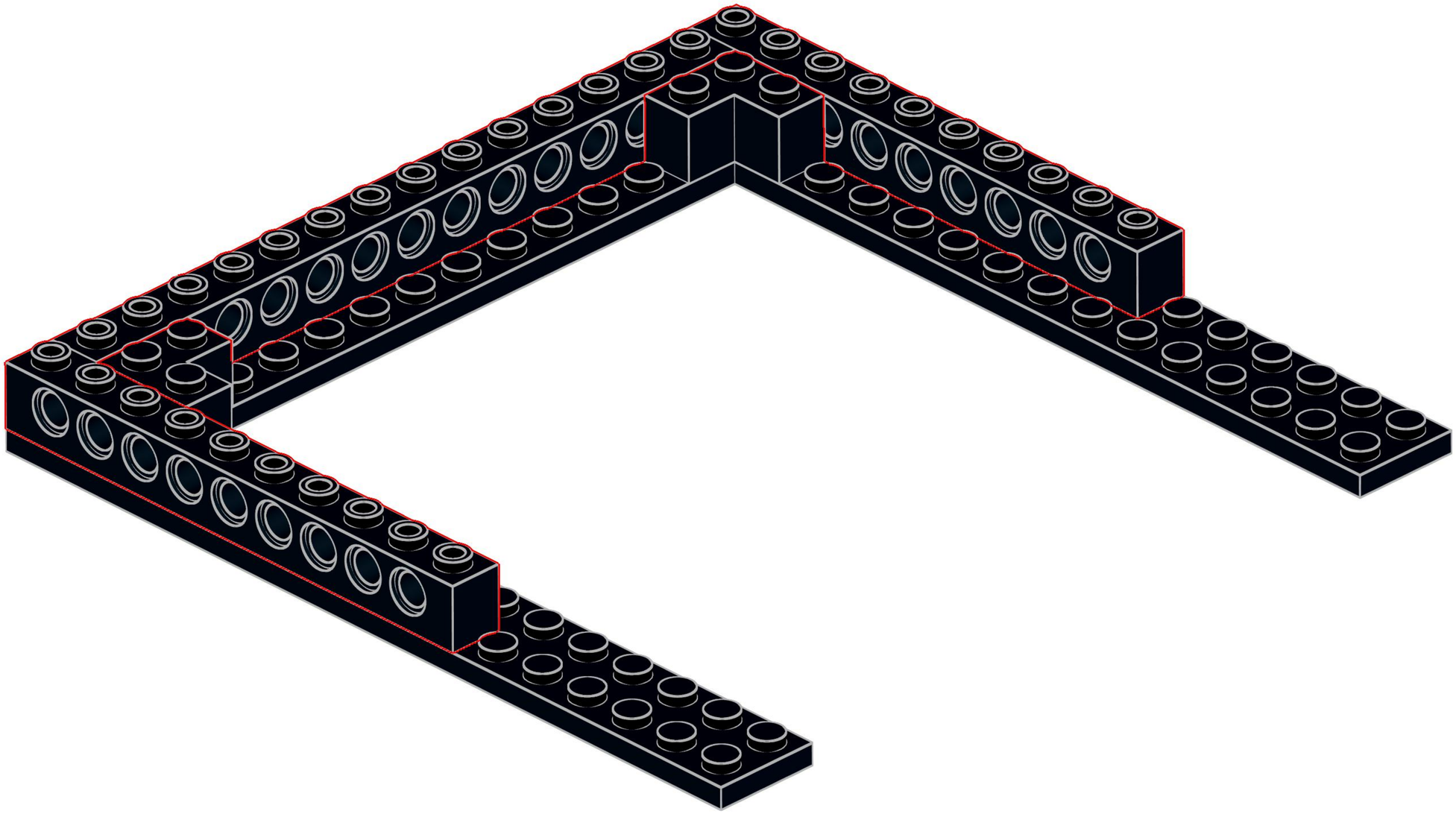

3

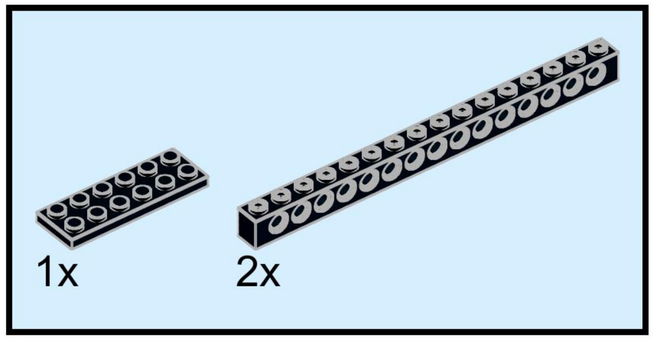

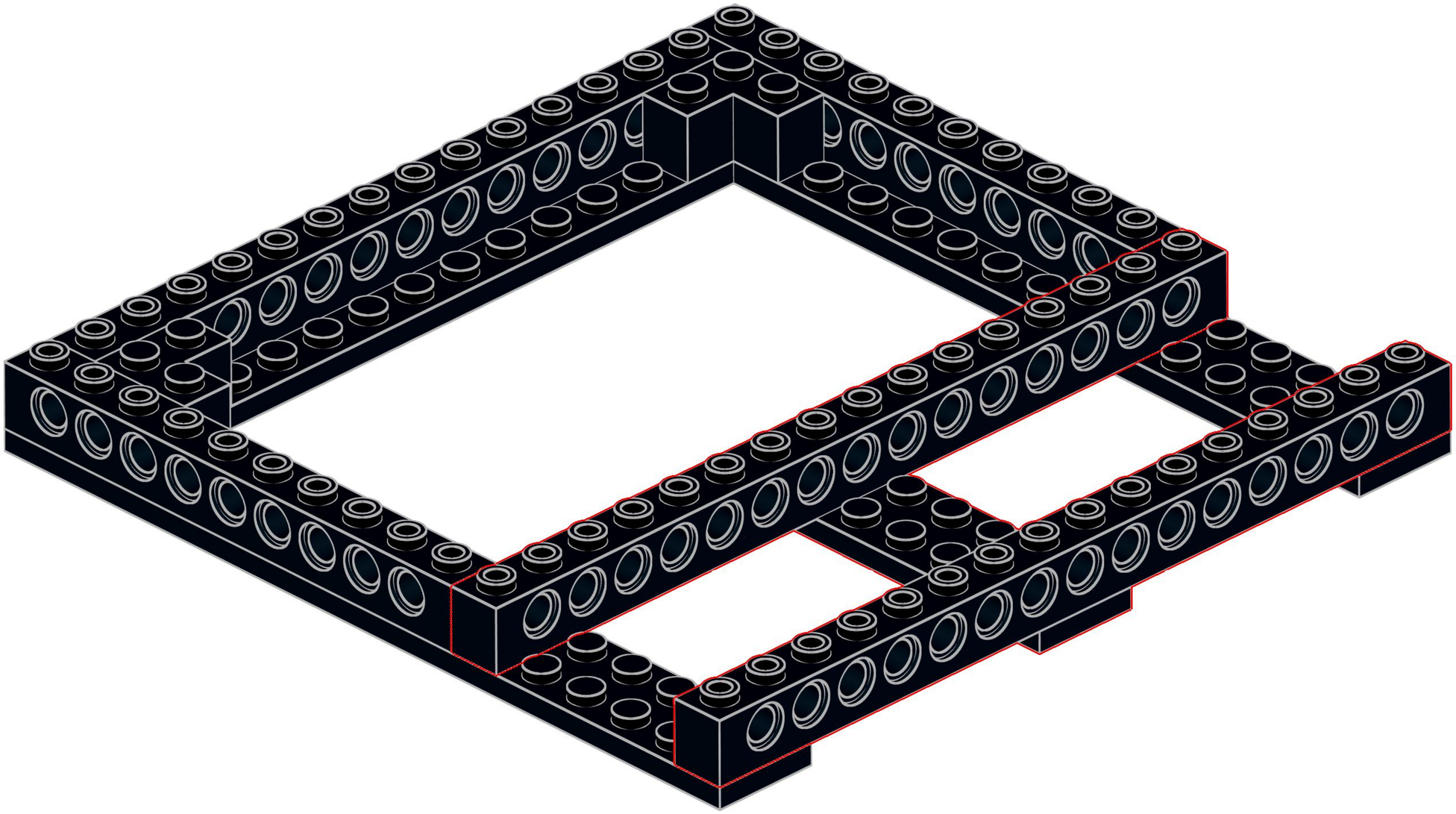

4

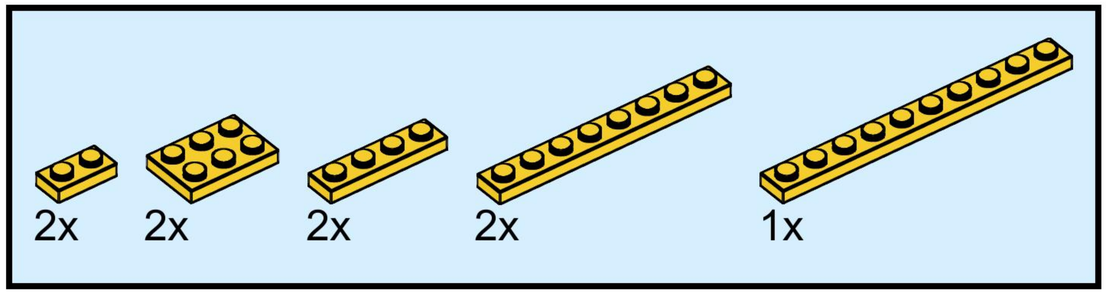

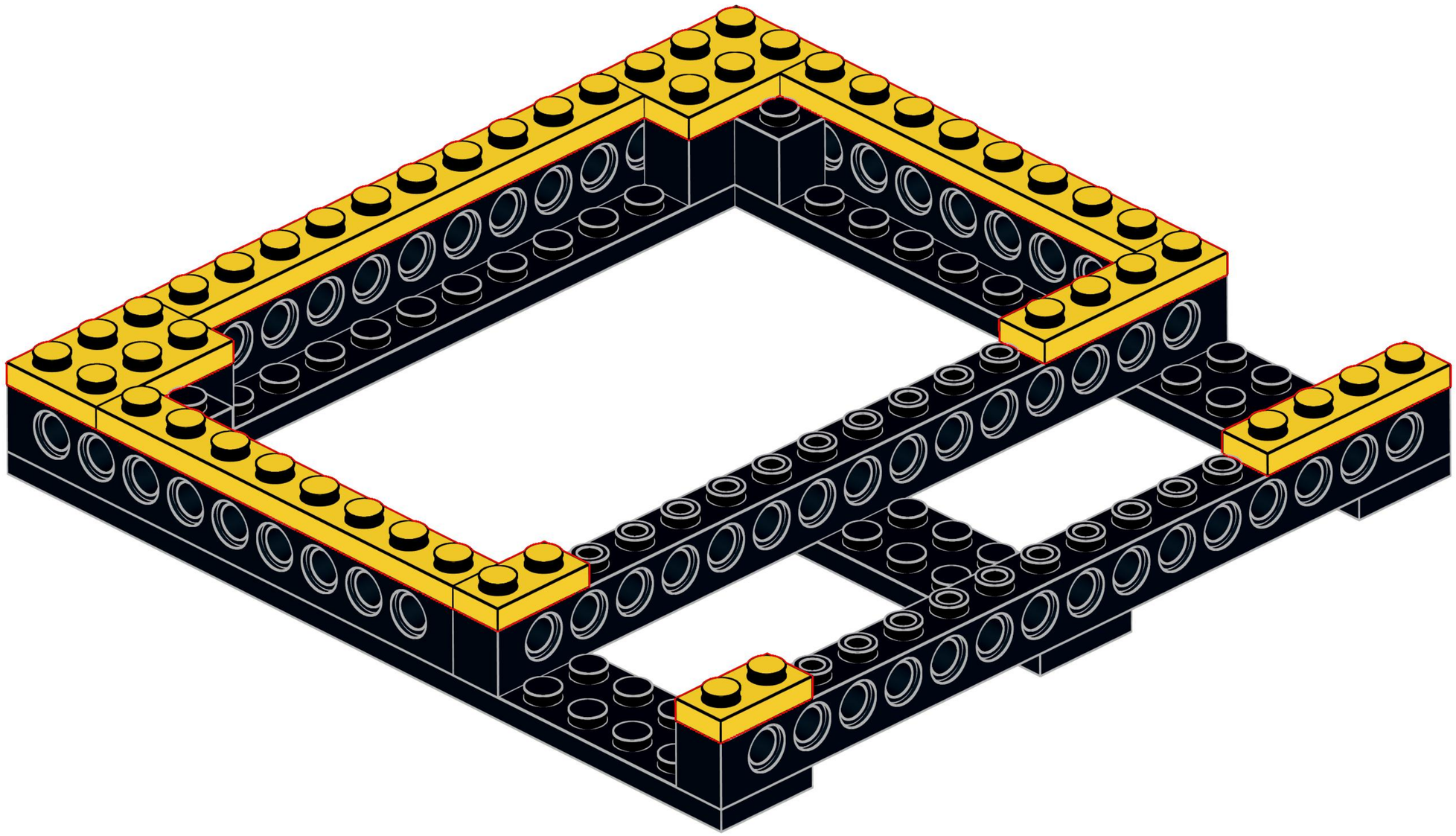

5

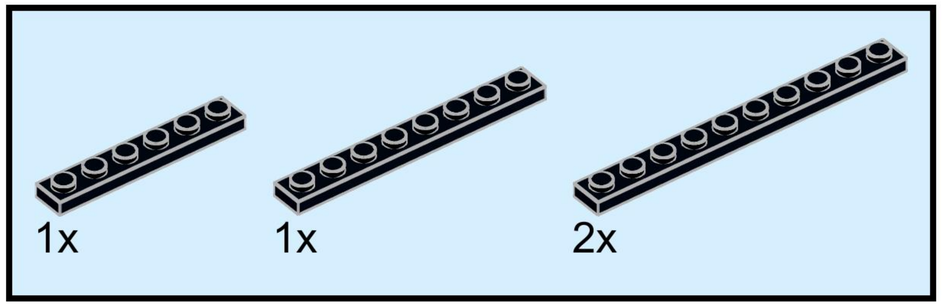

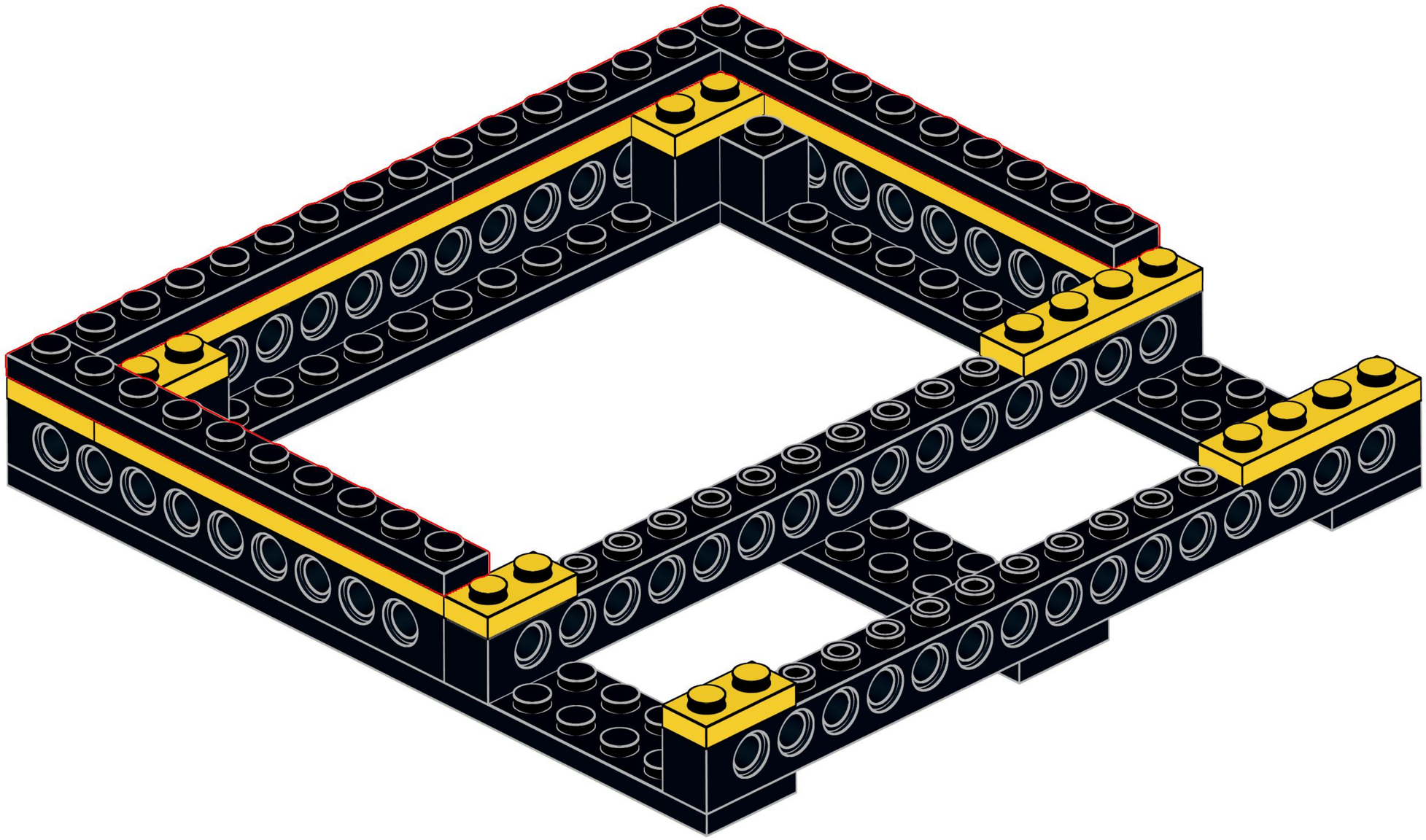

6

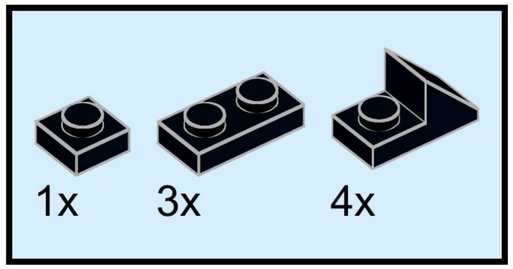

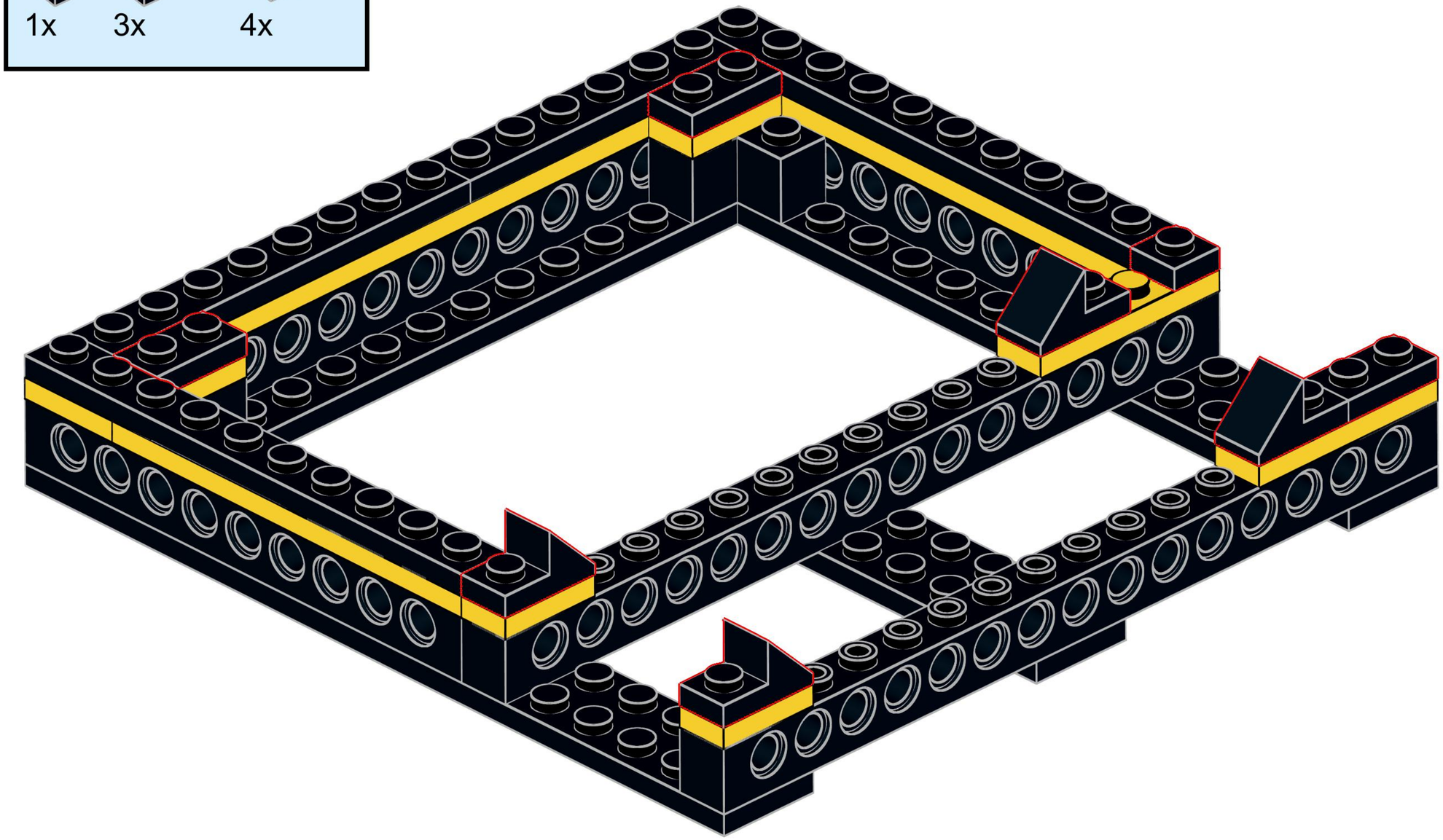

7

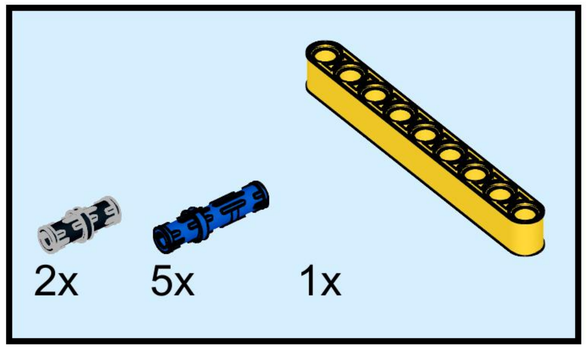

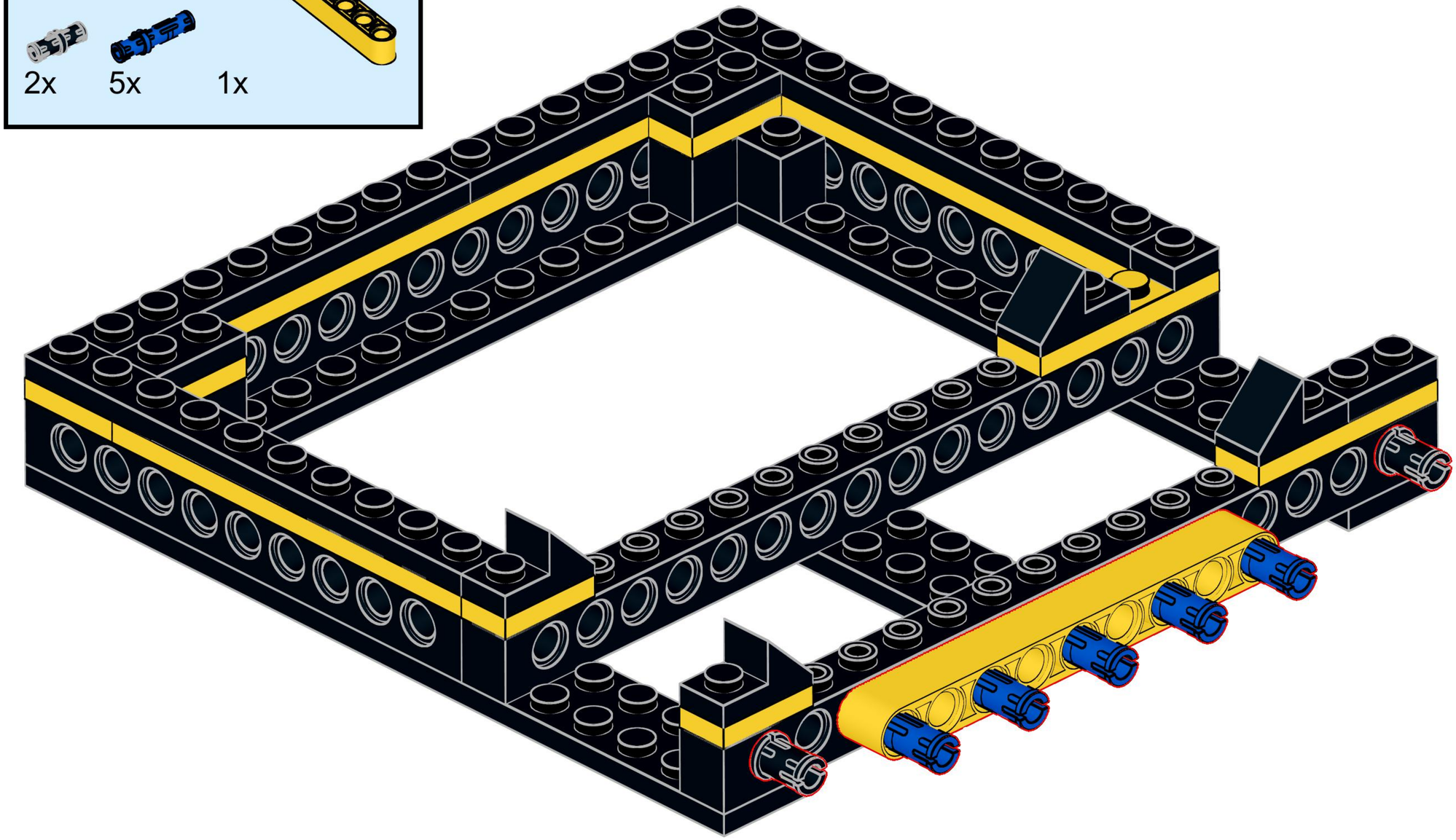

8

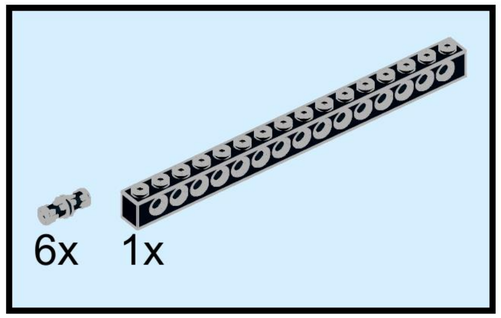

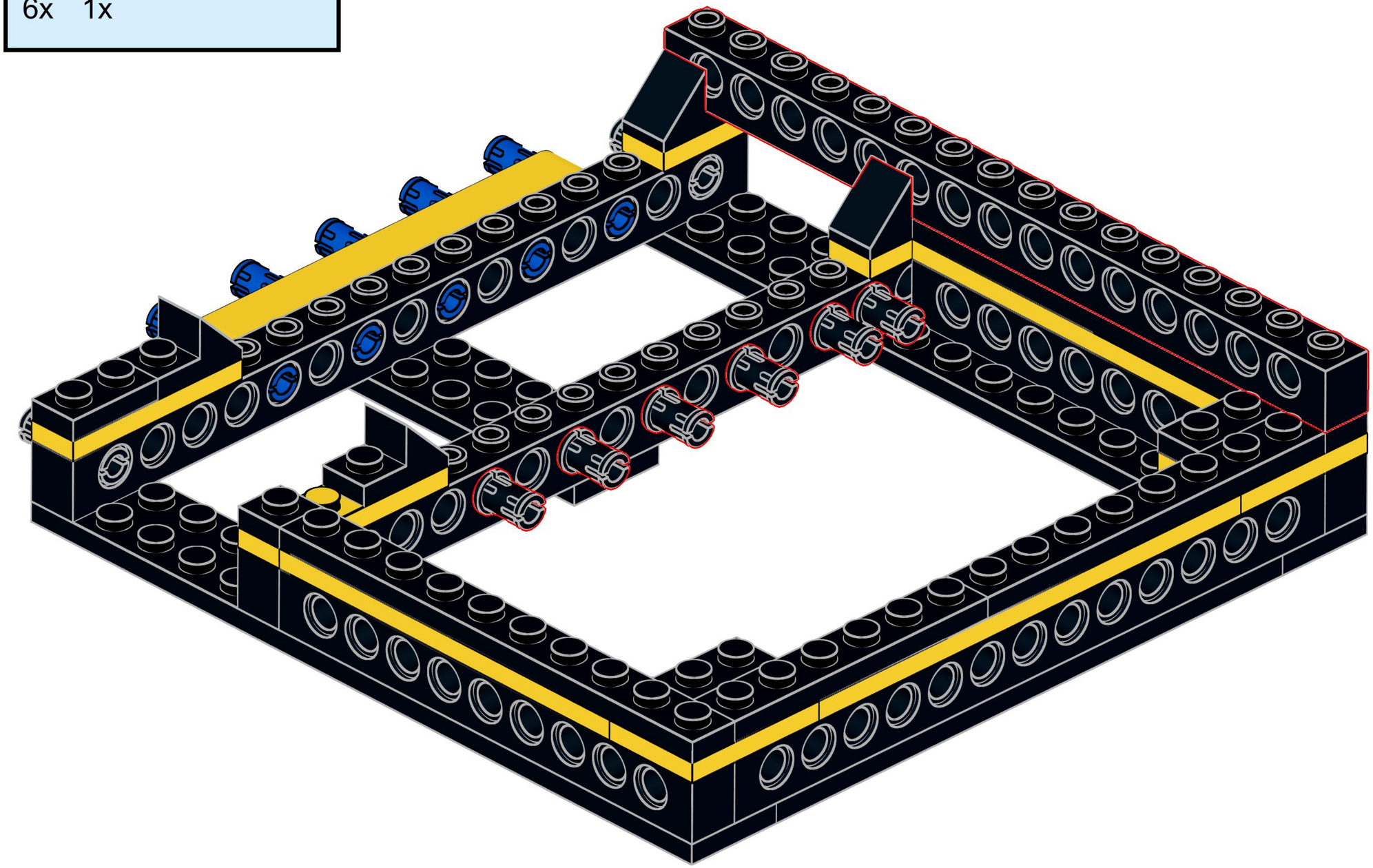

9

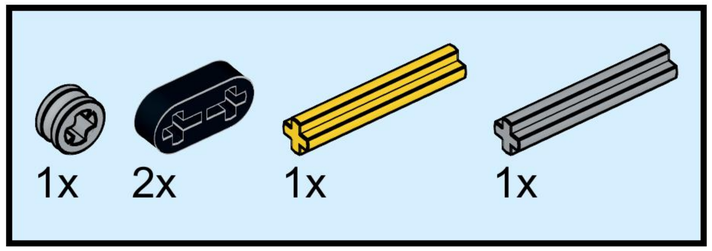

All axles in this assembly are 3L, except the final yellow axle, which is 5L.

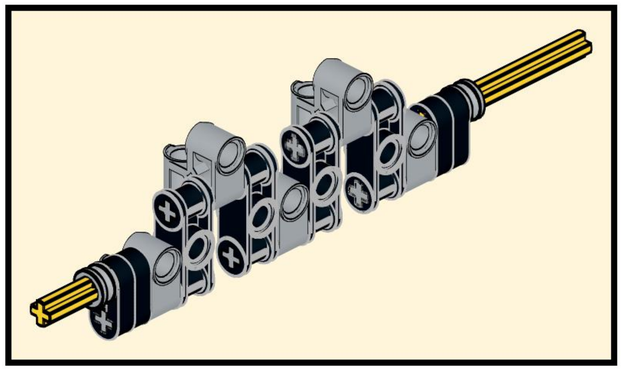

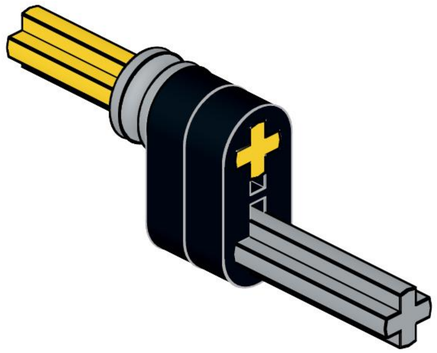

10

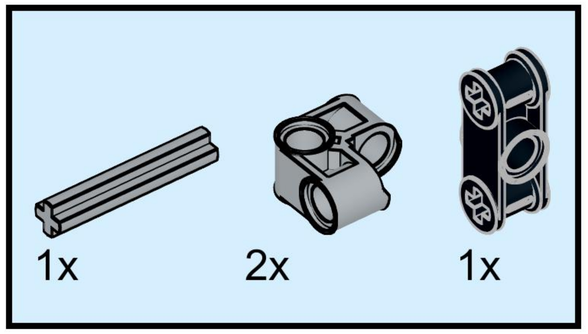

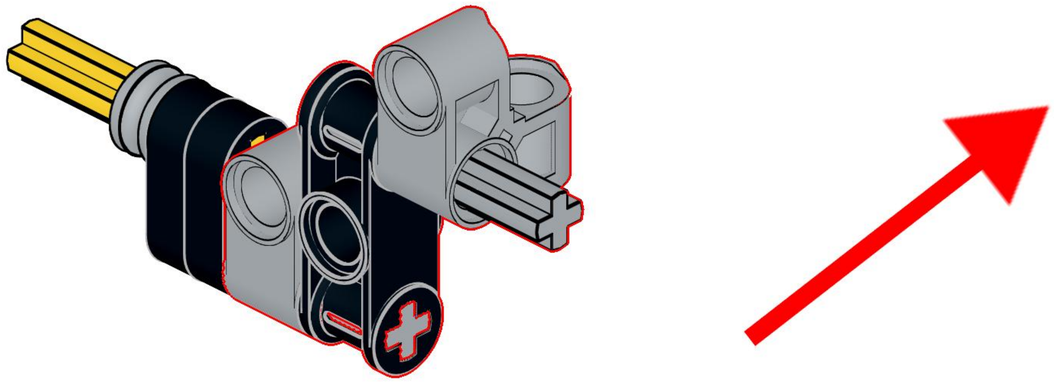

Note the orientation of the 2x2 Bent Technic Cross Blocks. It is essential that each of these parts in the crank assembly are oriented in the correct direction.

11

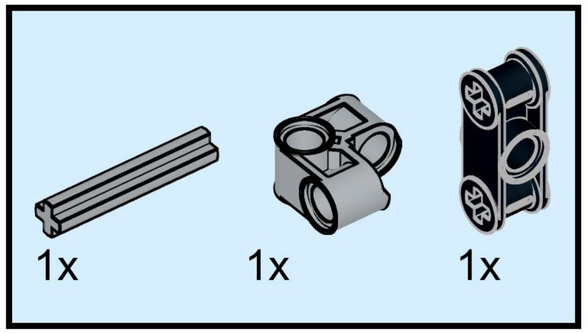

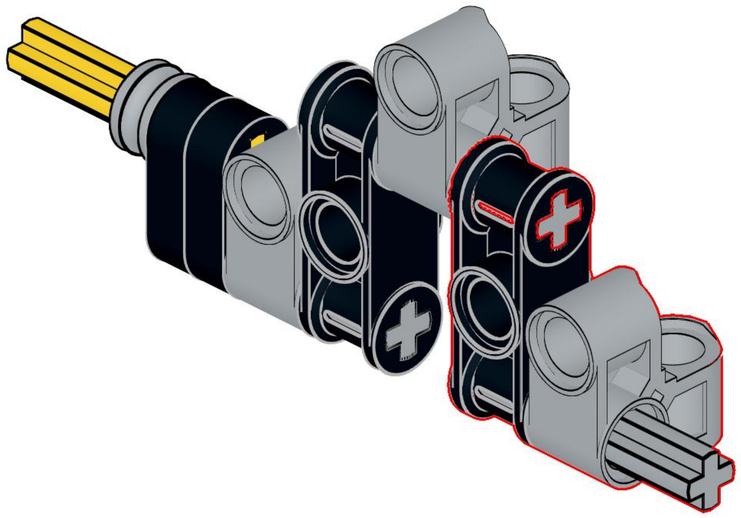

12

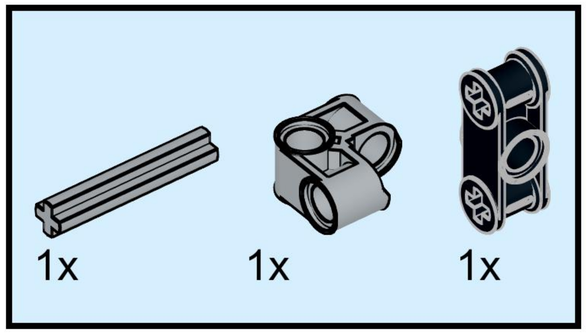

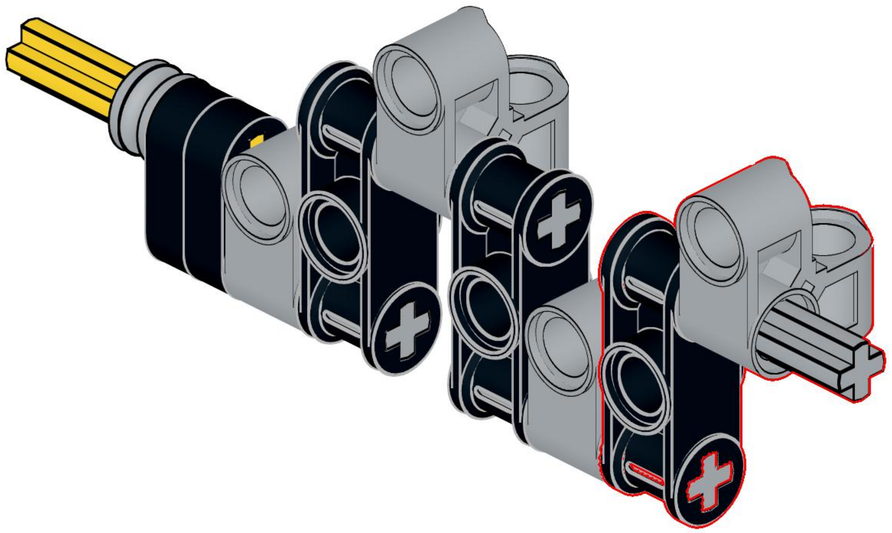

13

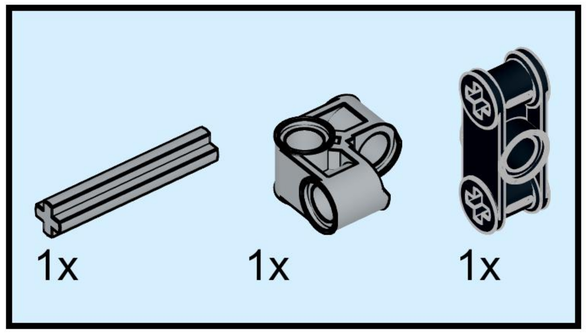

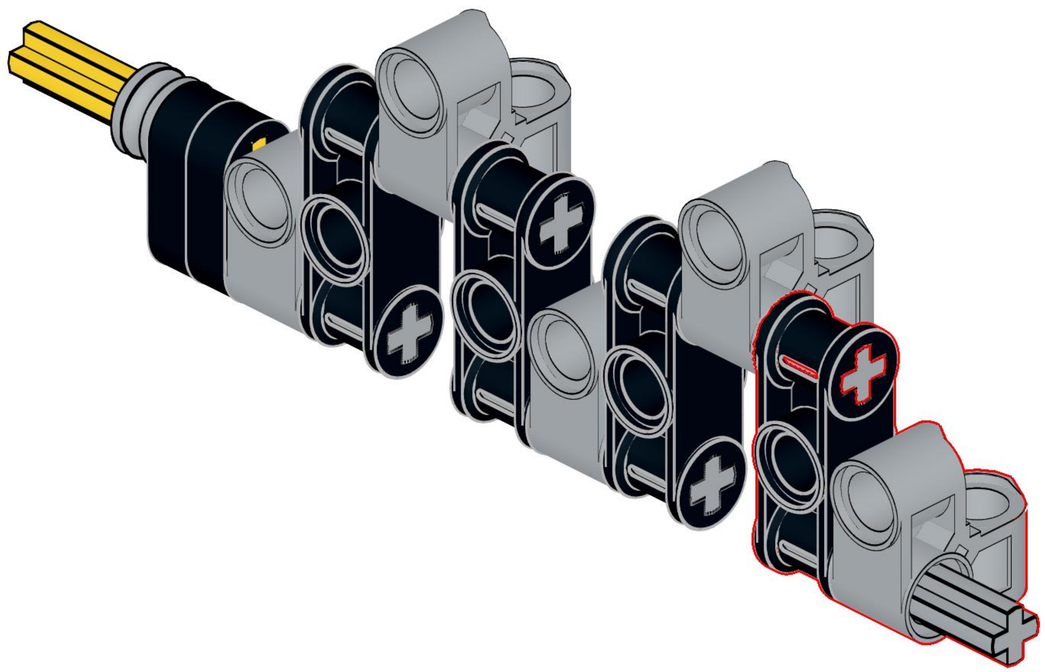

14

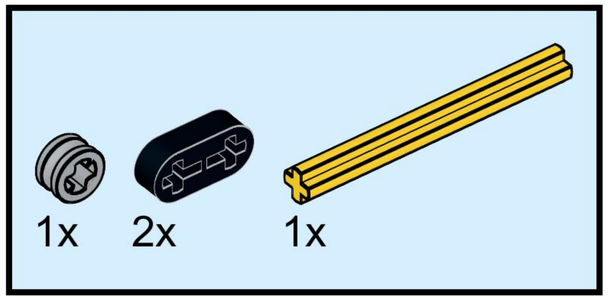

Verify all 5 Grey Cross Blocks are correctly oriented as shown here when adding through-axles later.

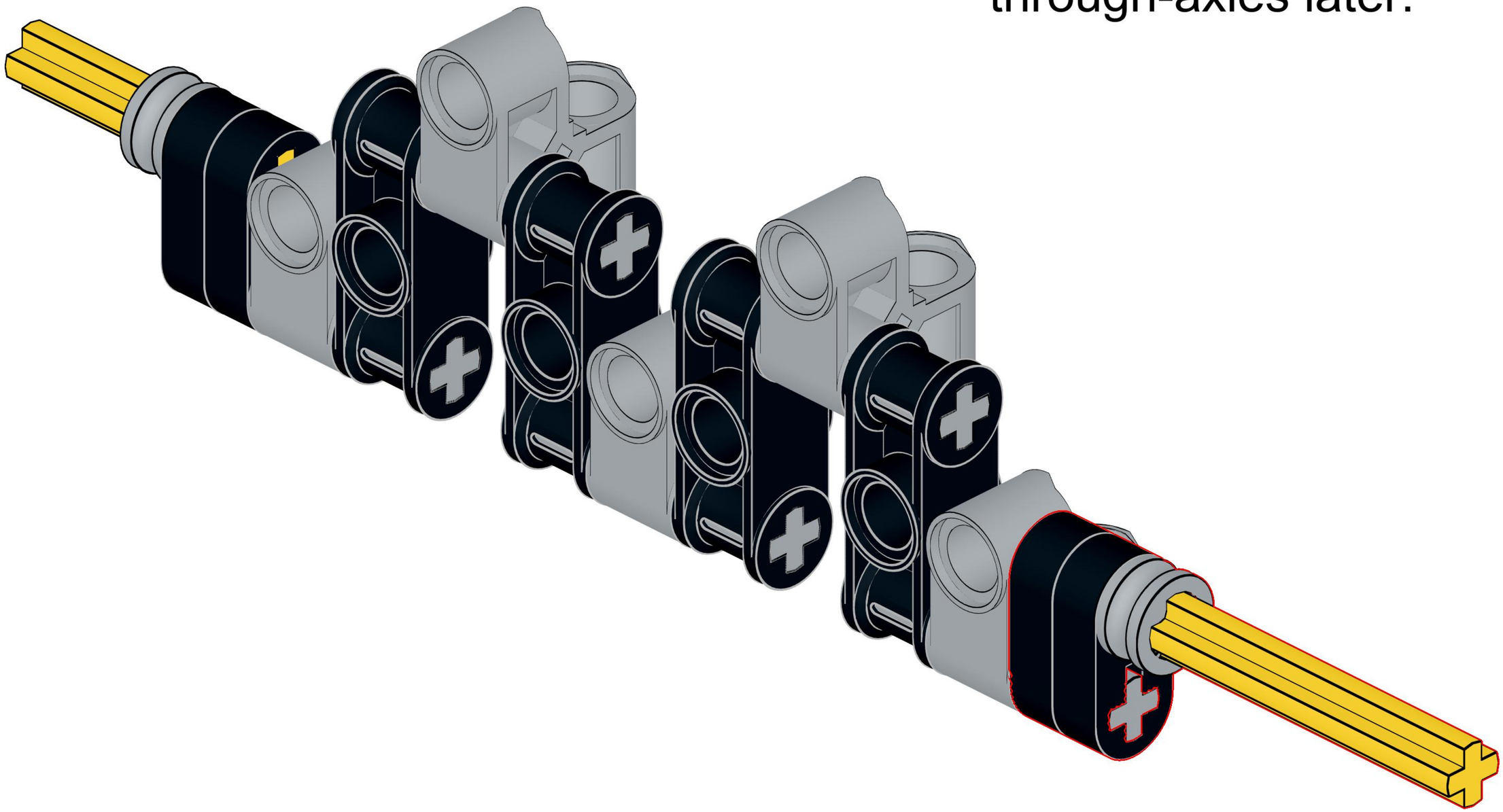

15

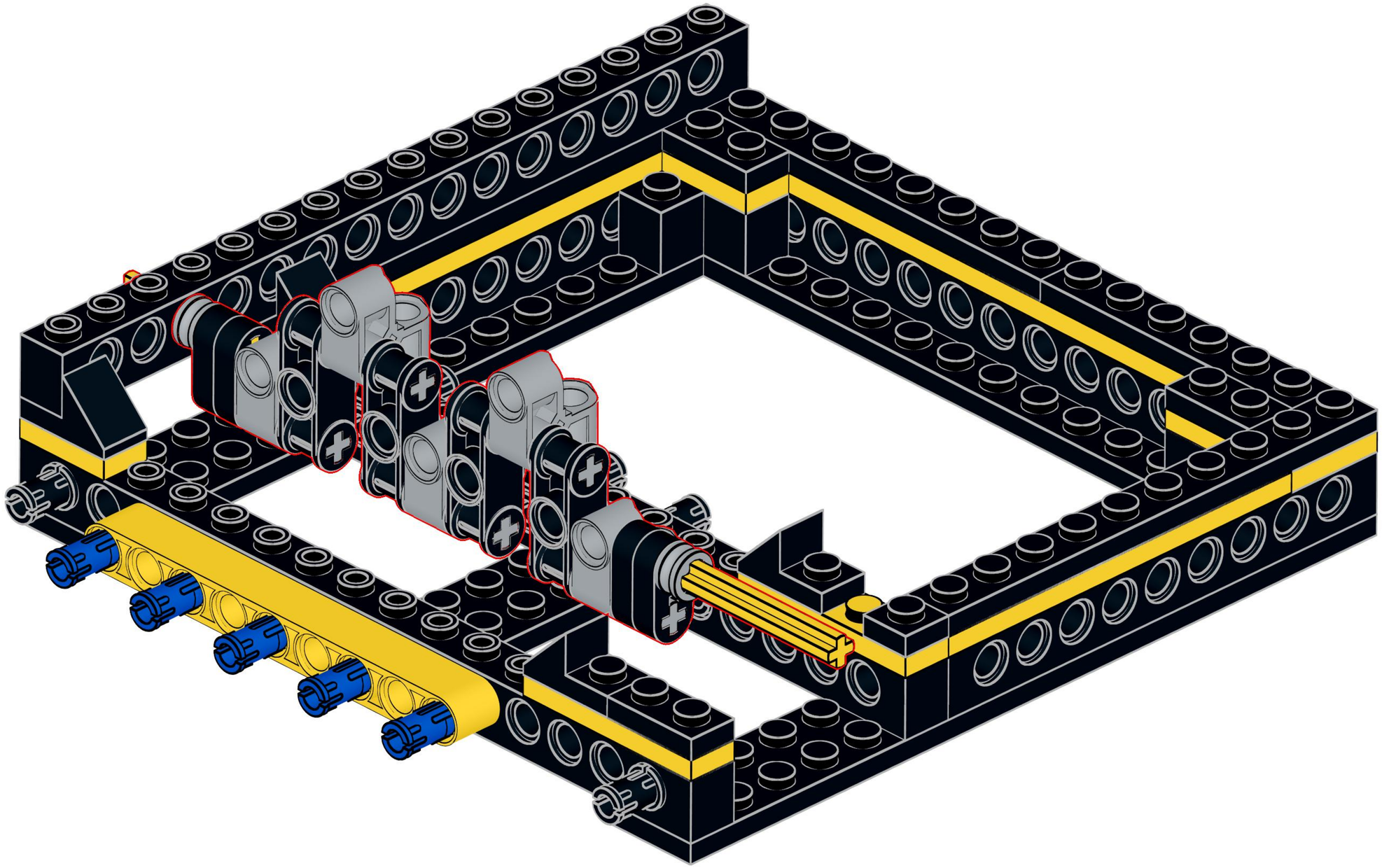

16

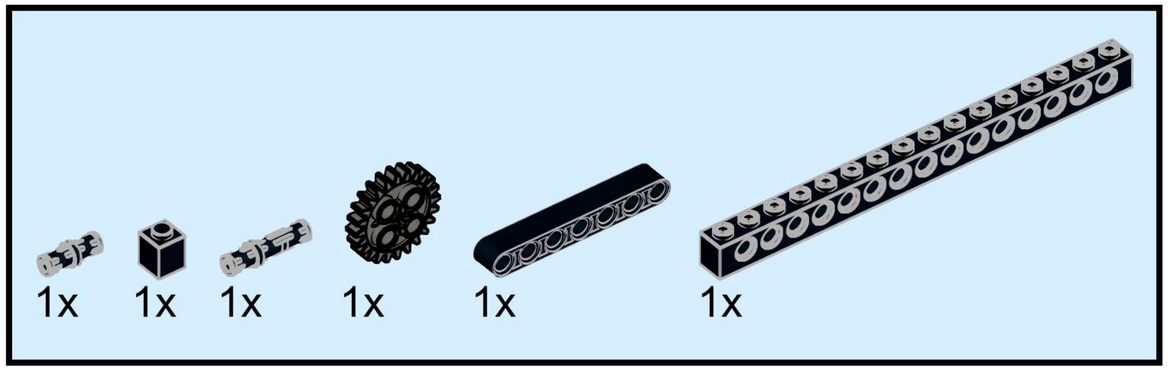

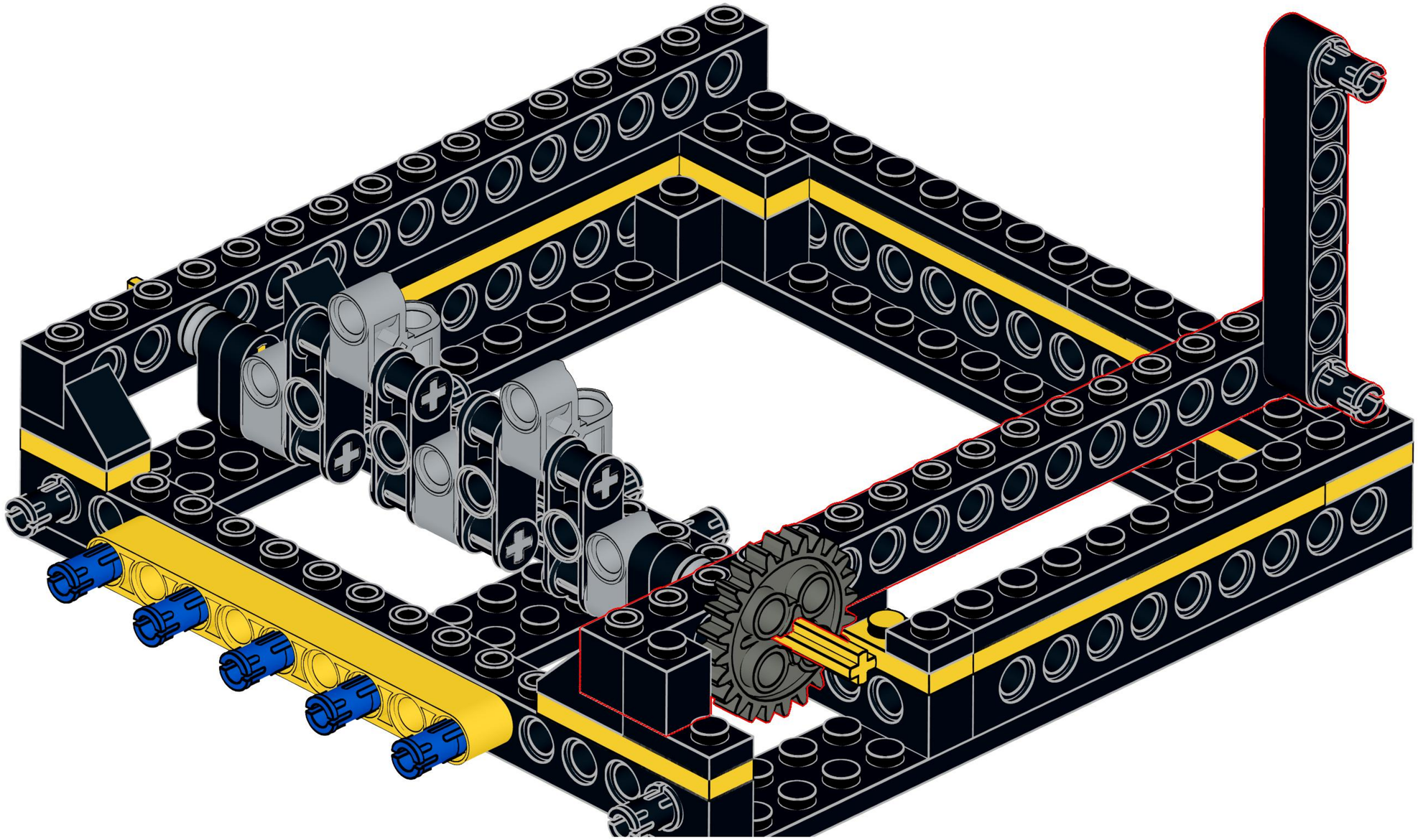

17

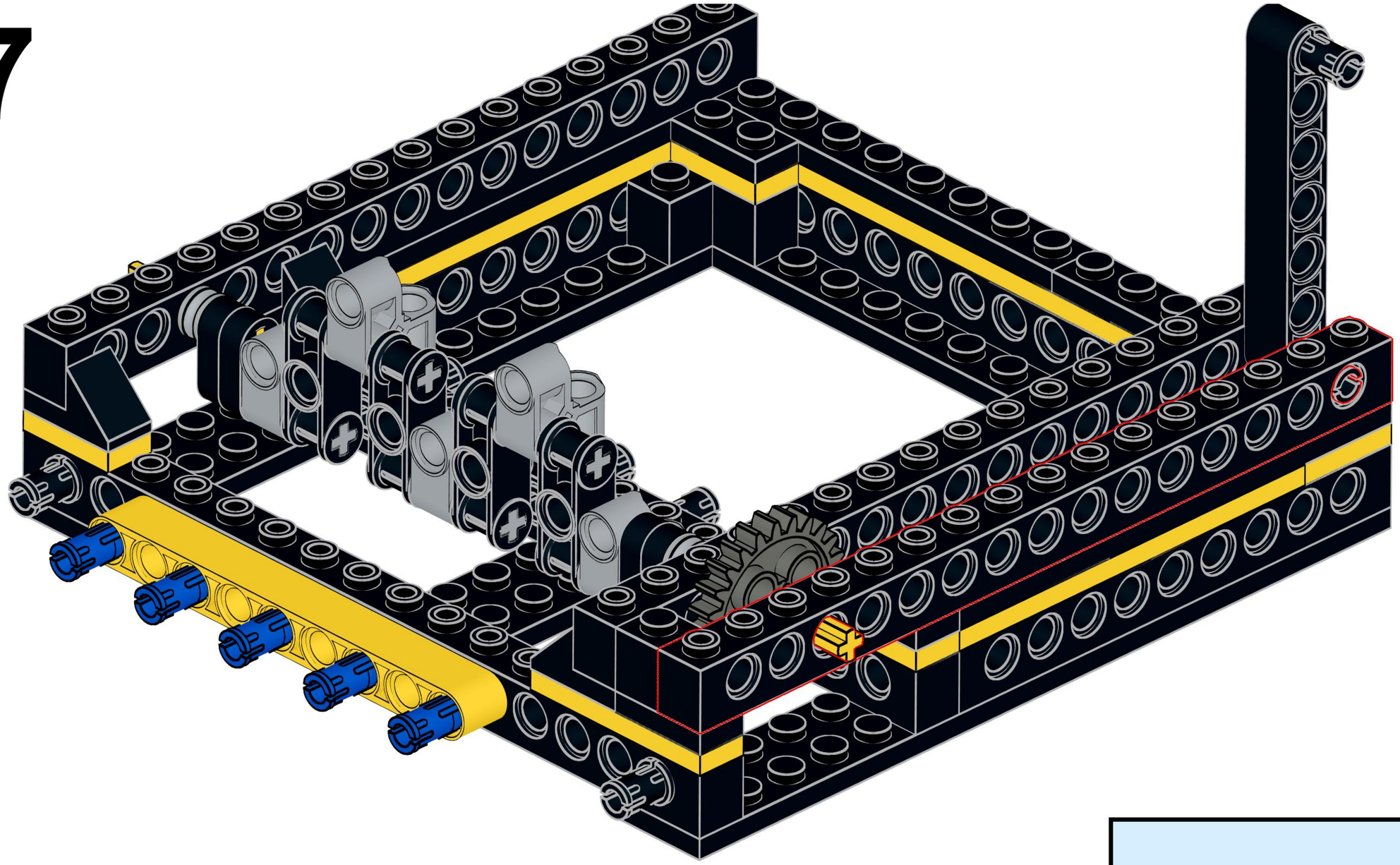

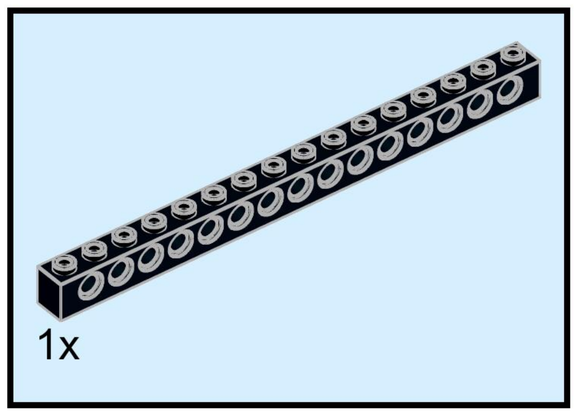

18

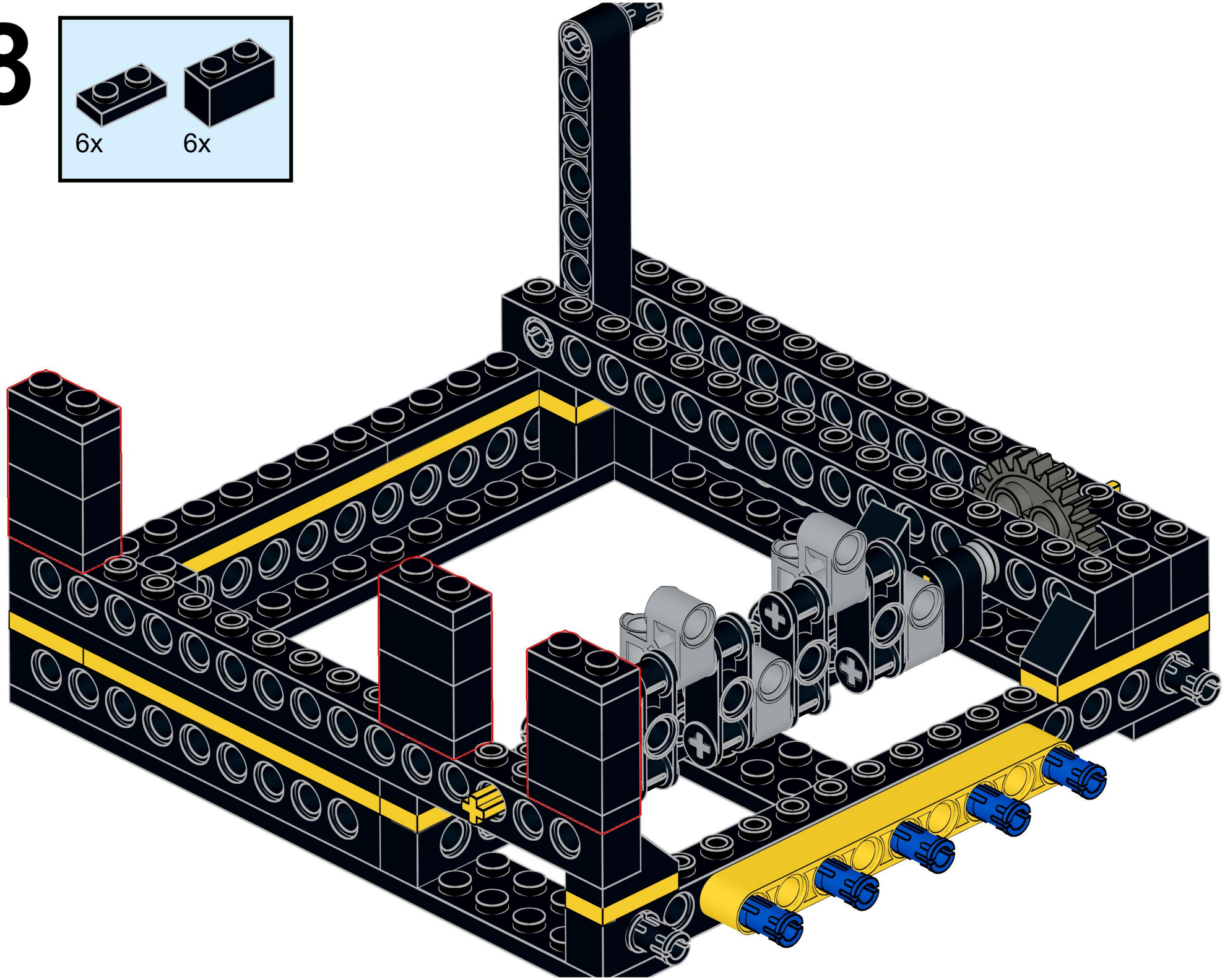

19

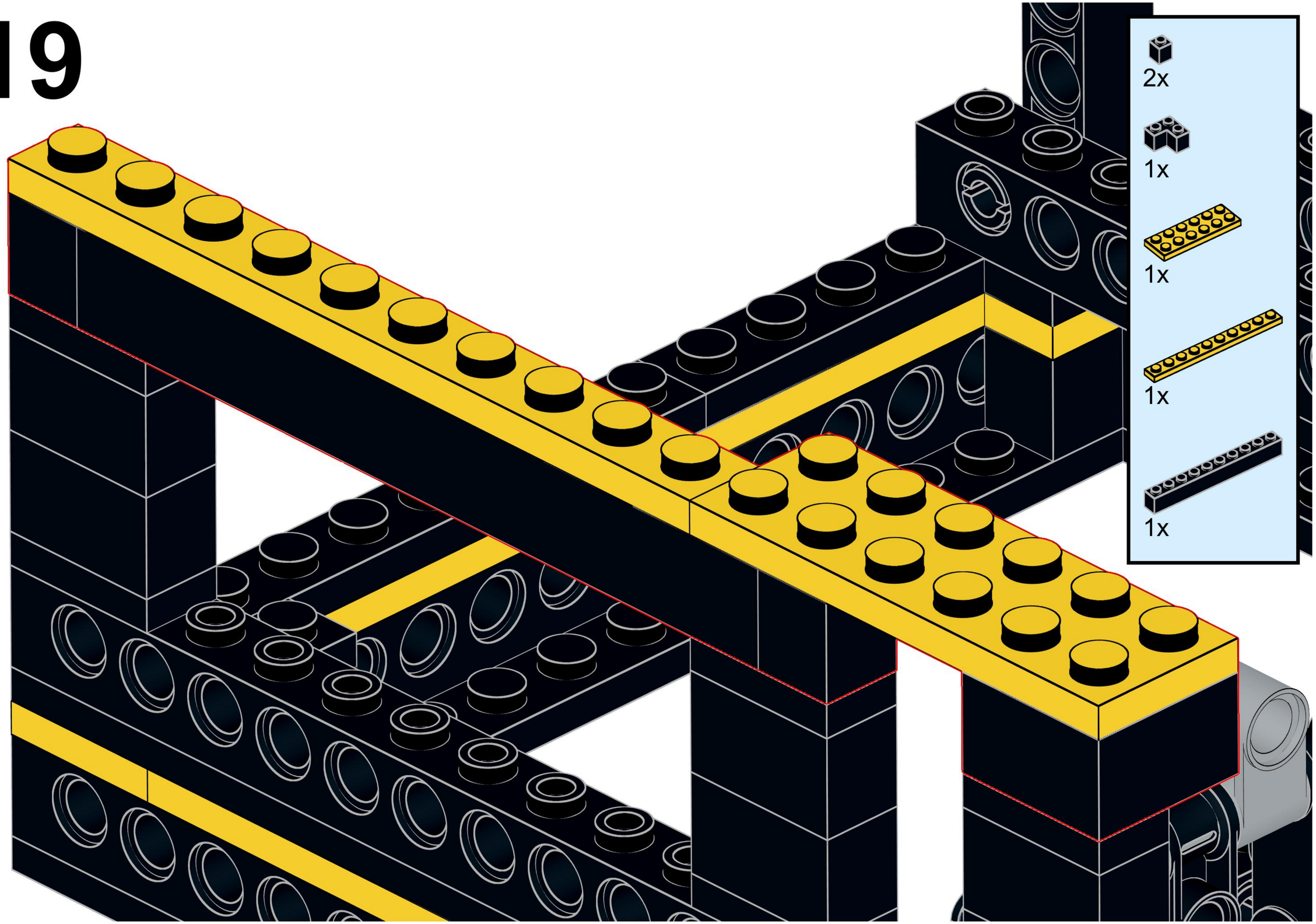

20

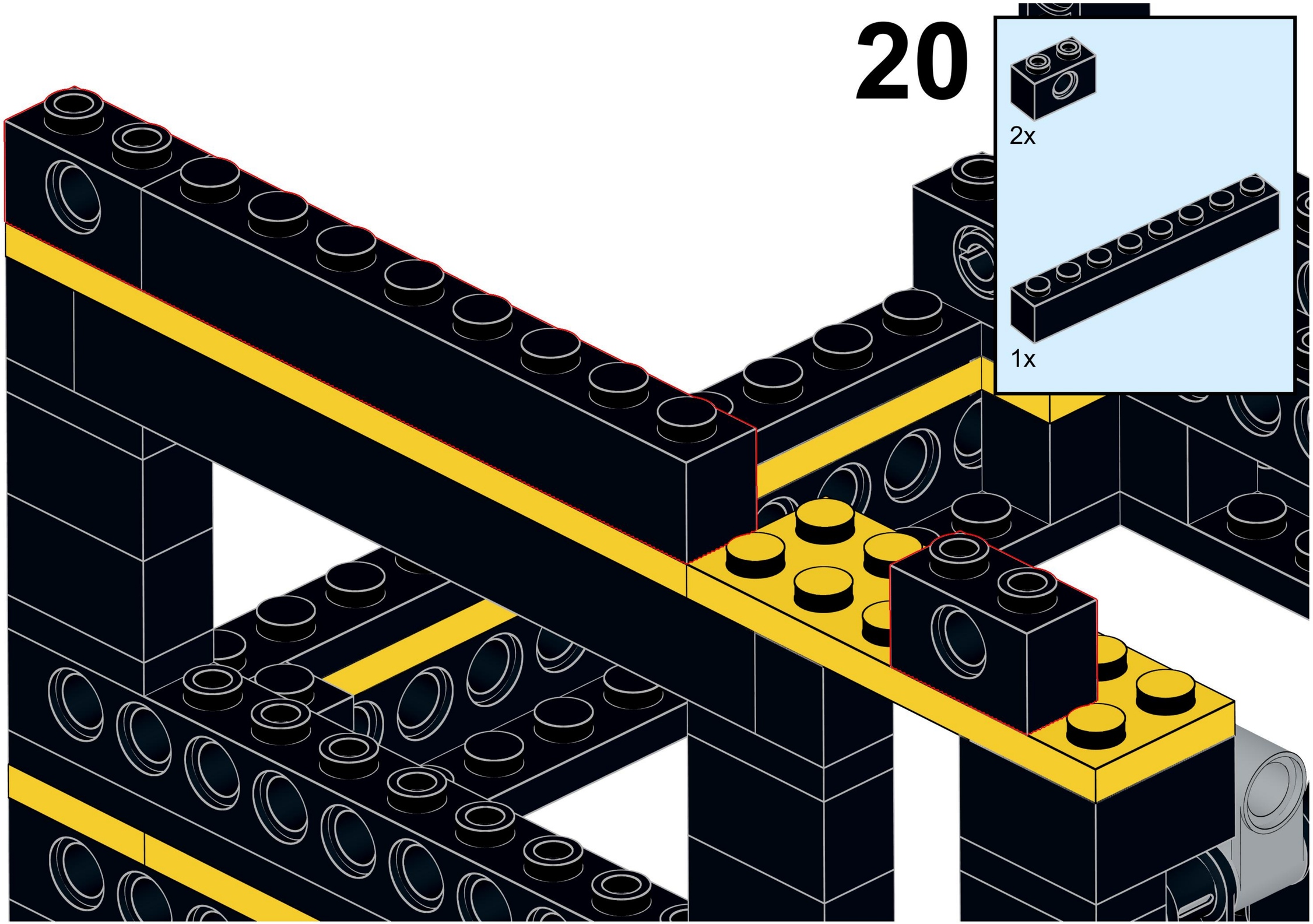

21

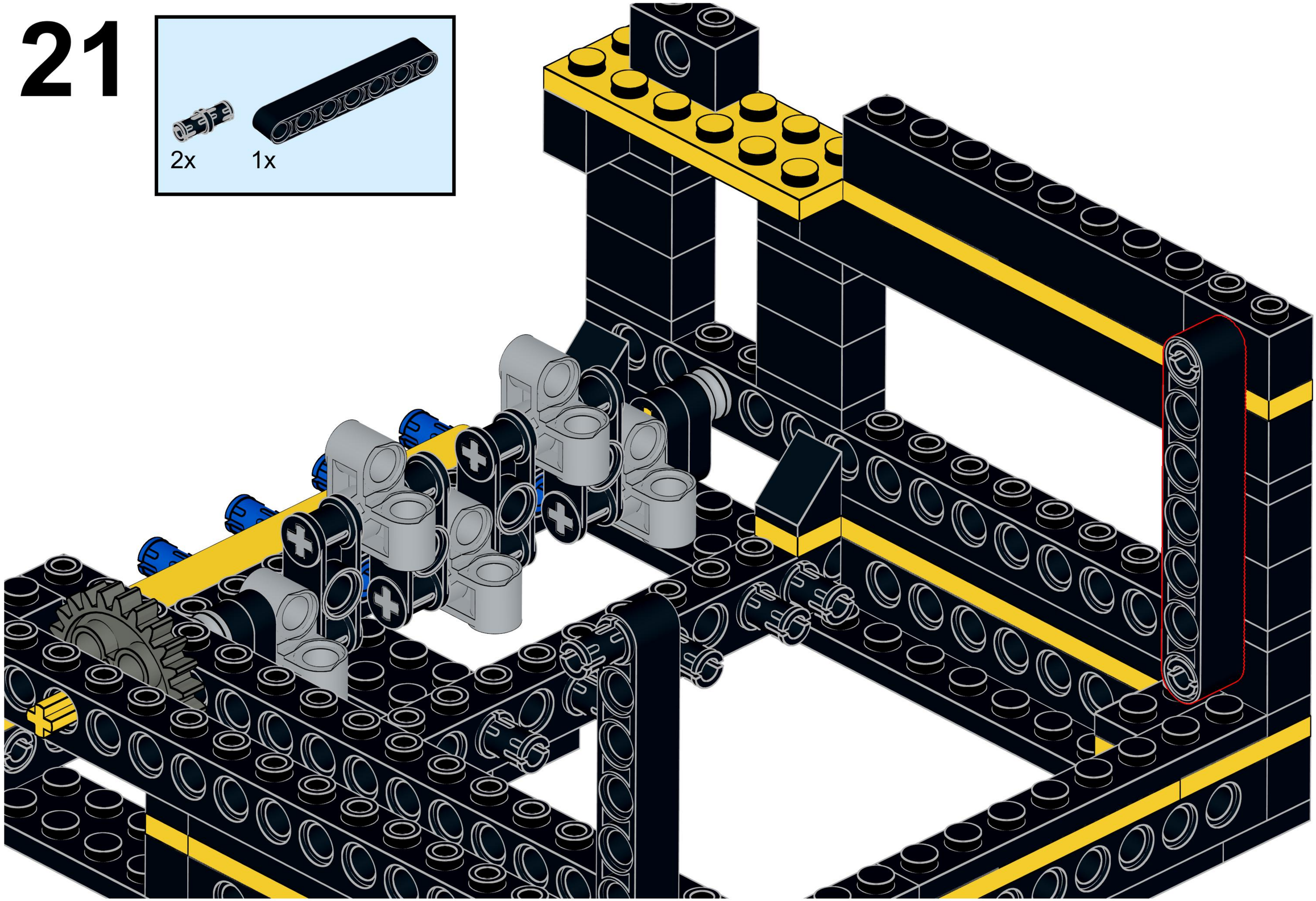

22

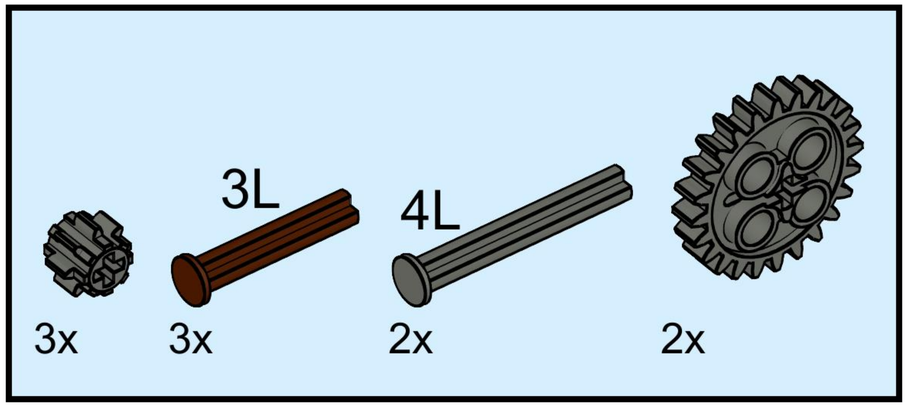

23

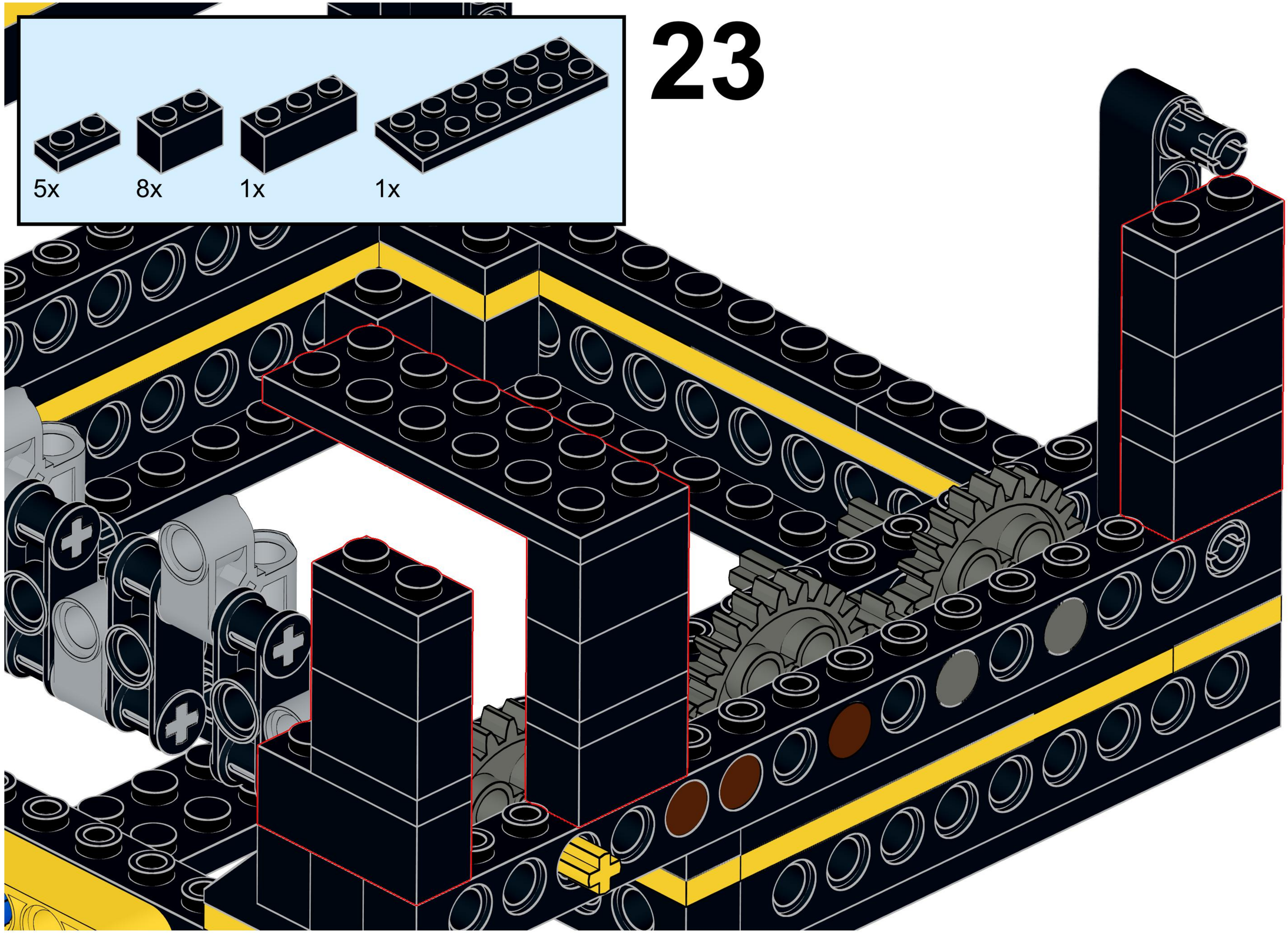

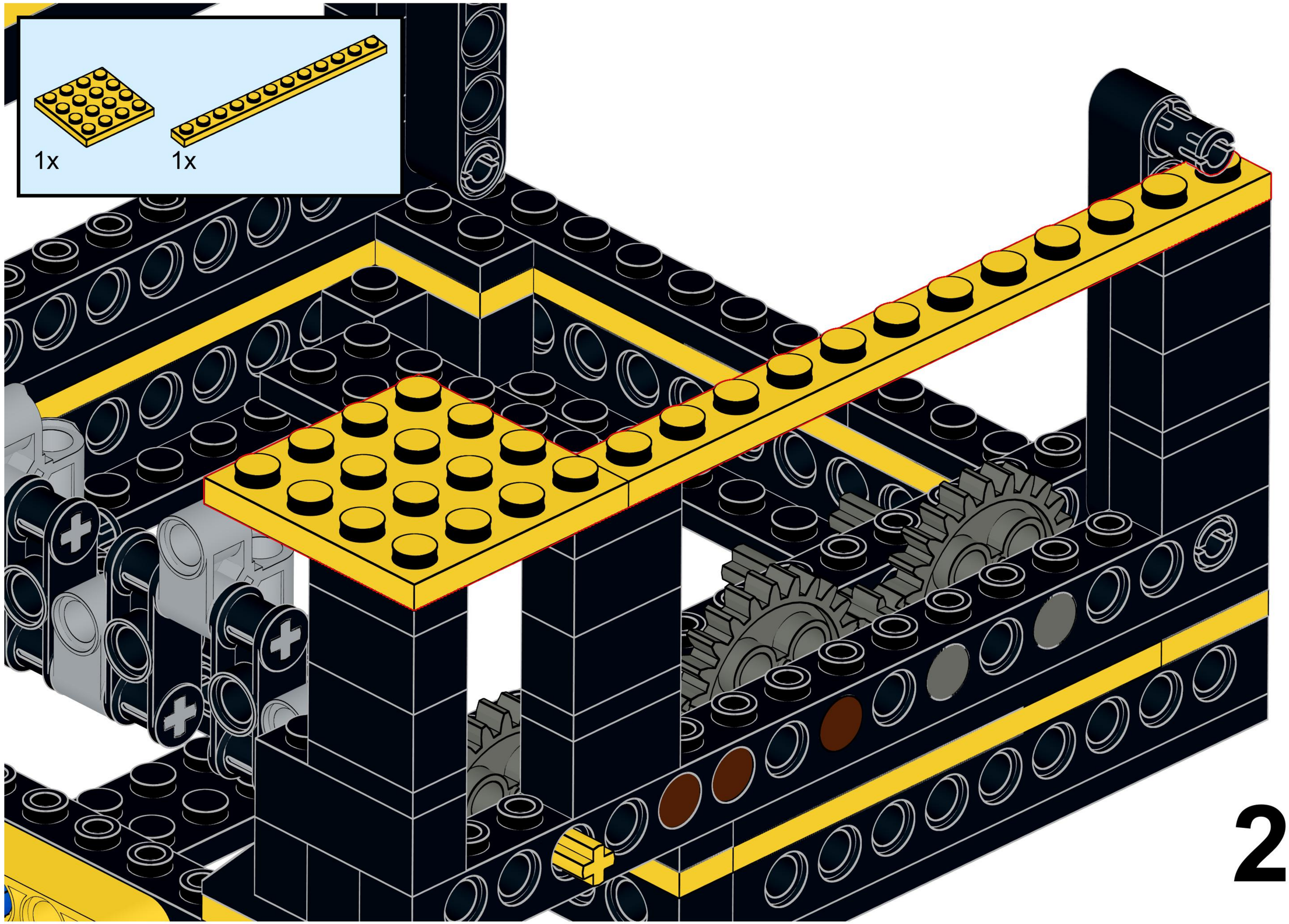
1x
1x

25

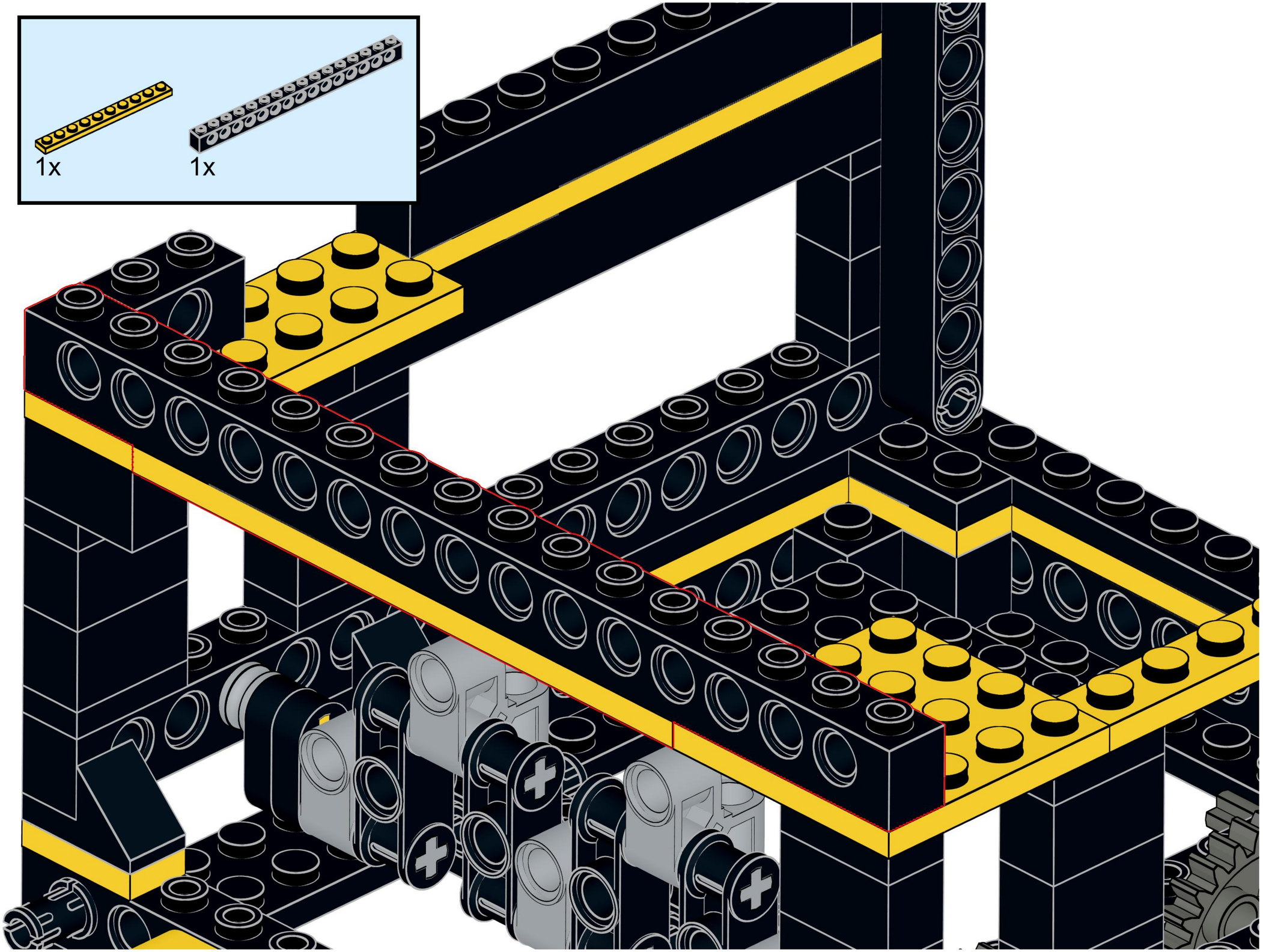

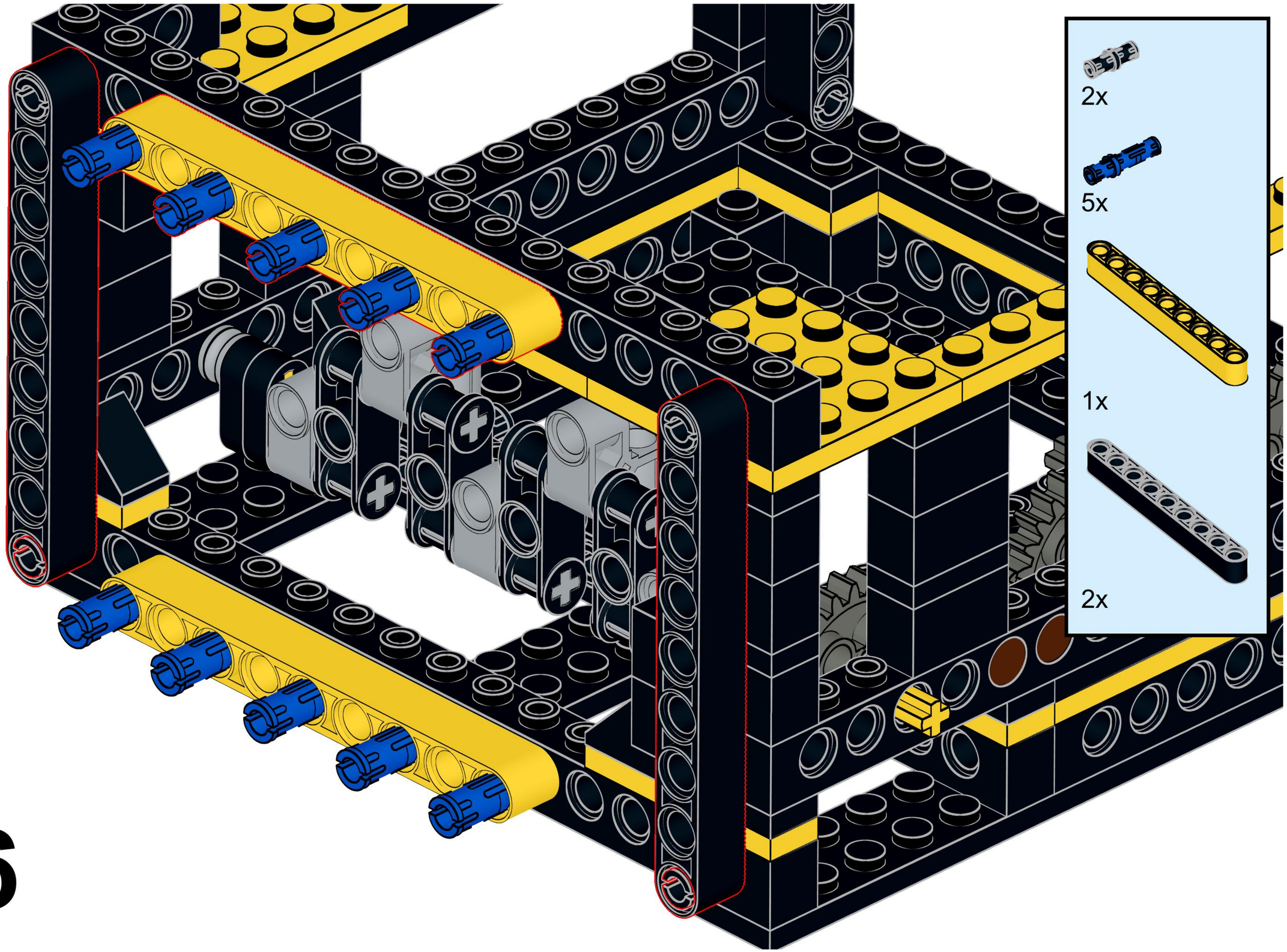
2x
5x
1x
2x

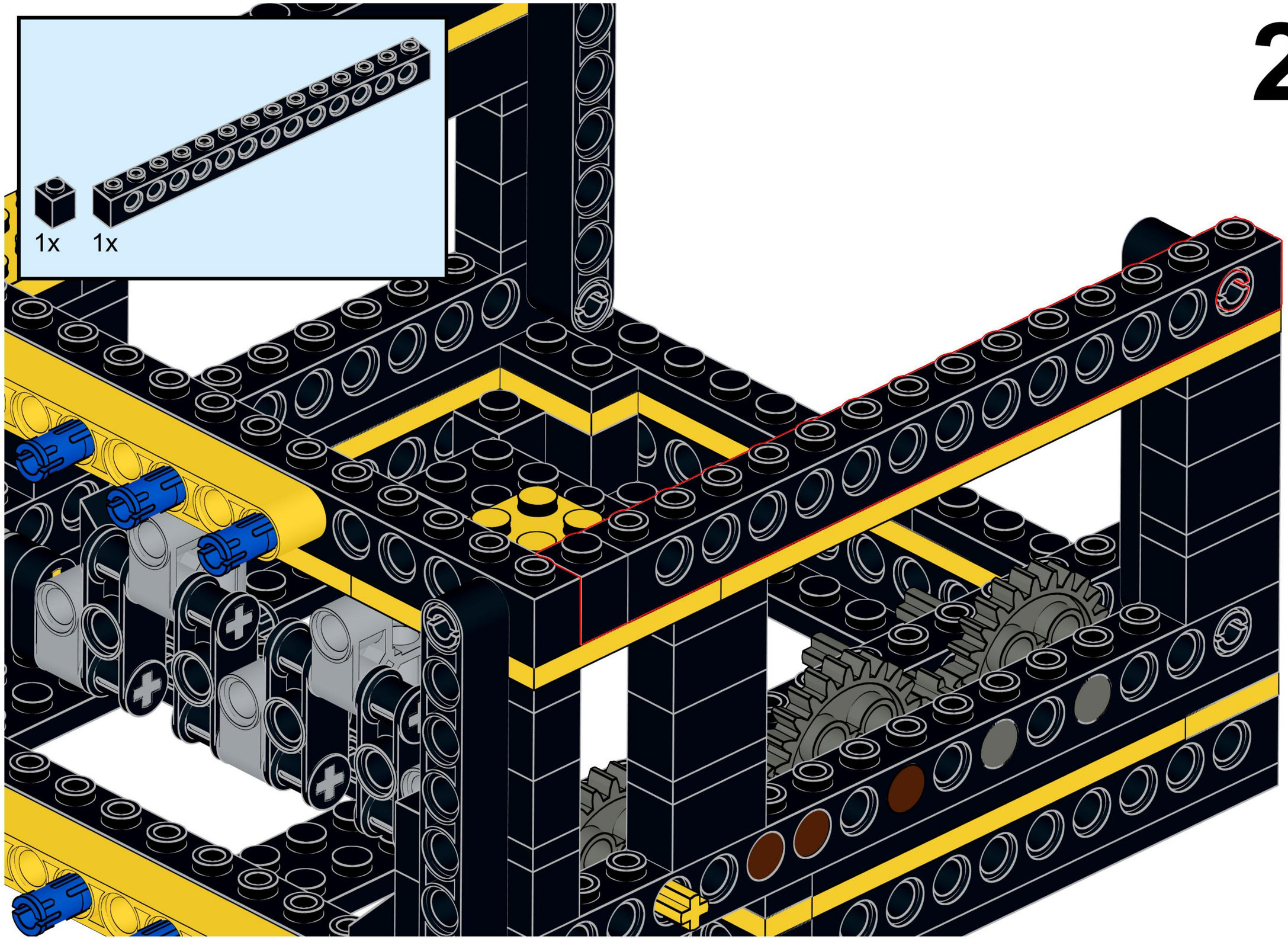
1x
1x

28

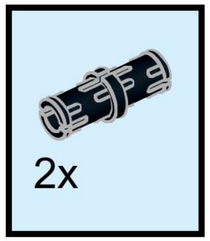

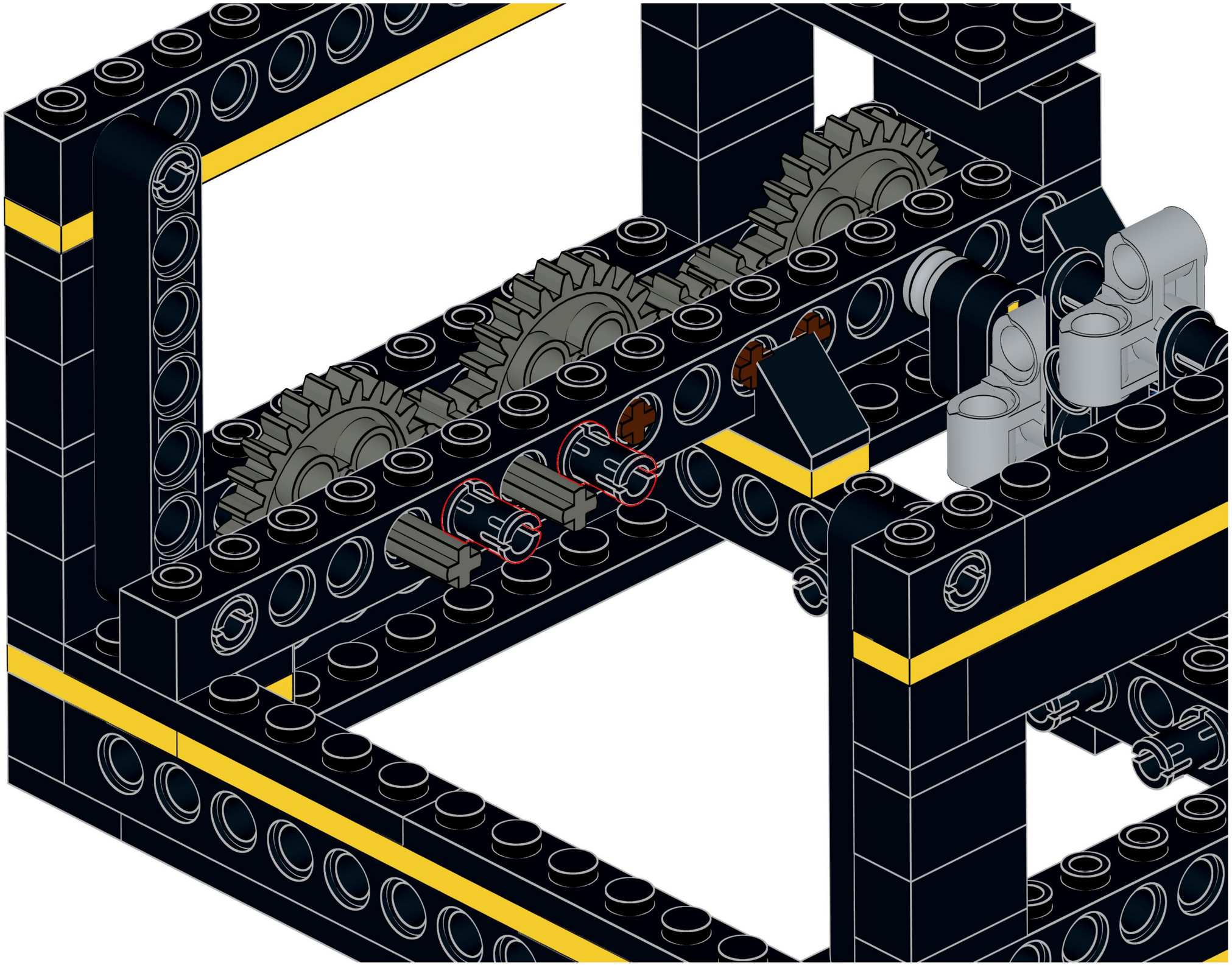

29

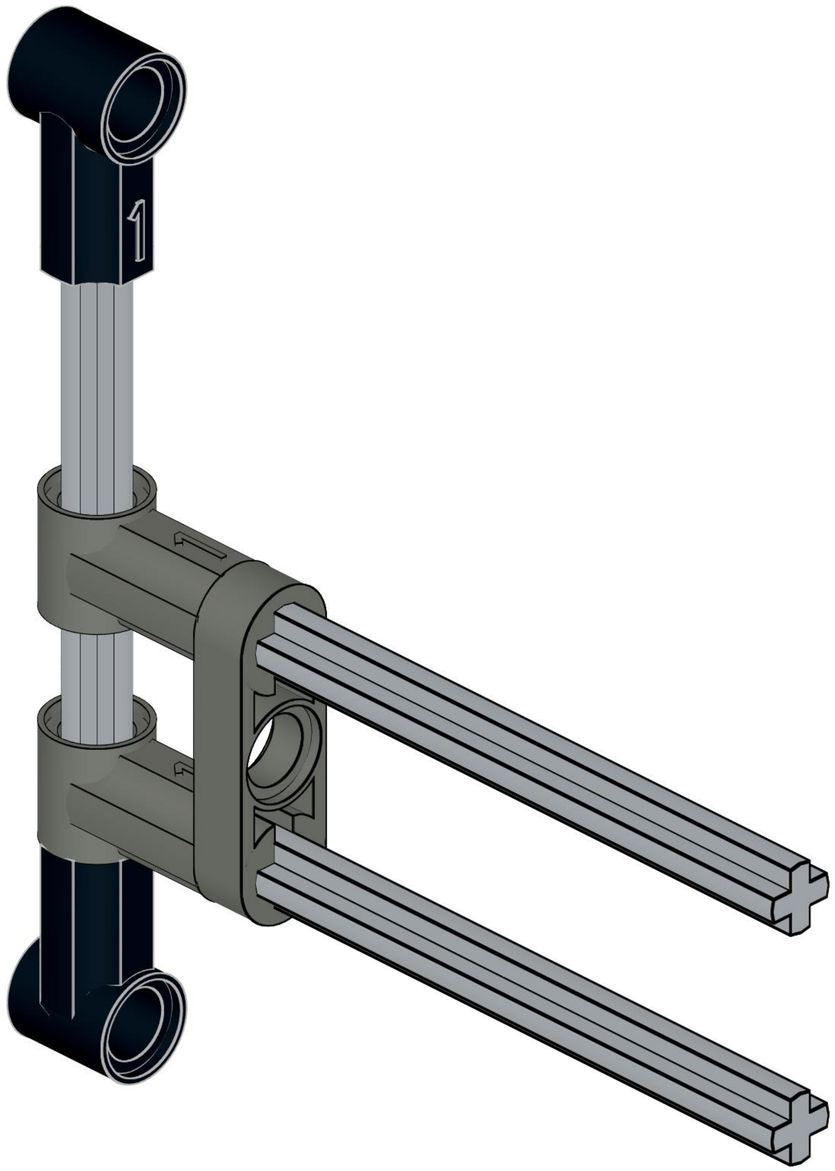

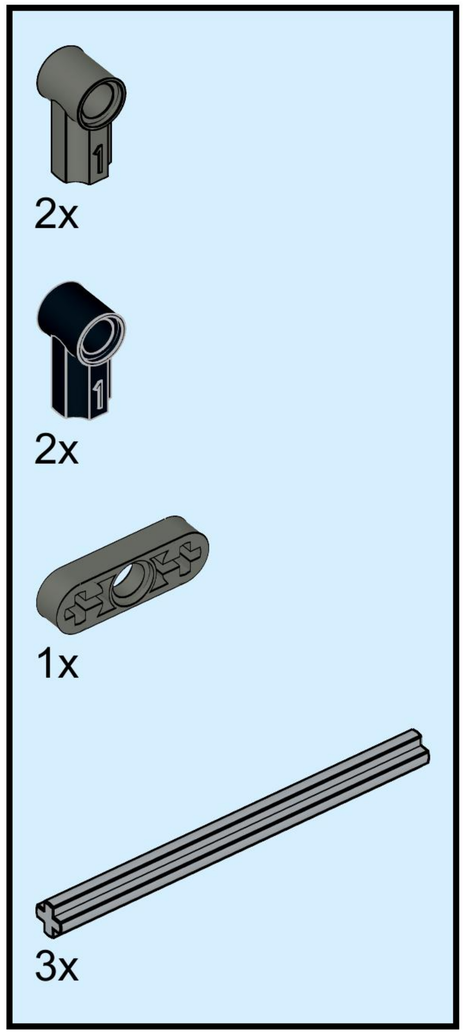

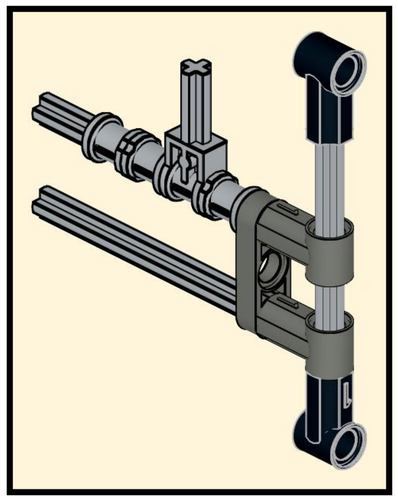

Five (5) of these assemblies will constructed and installed into the drive shaft in an identical manner. All Axles are 7L.

30

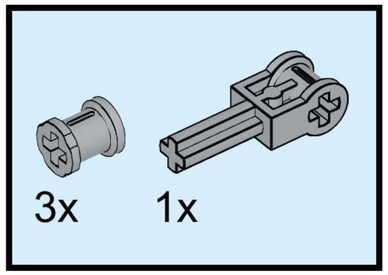

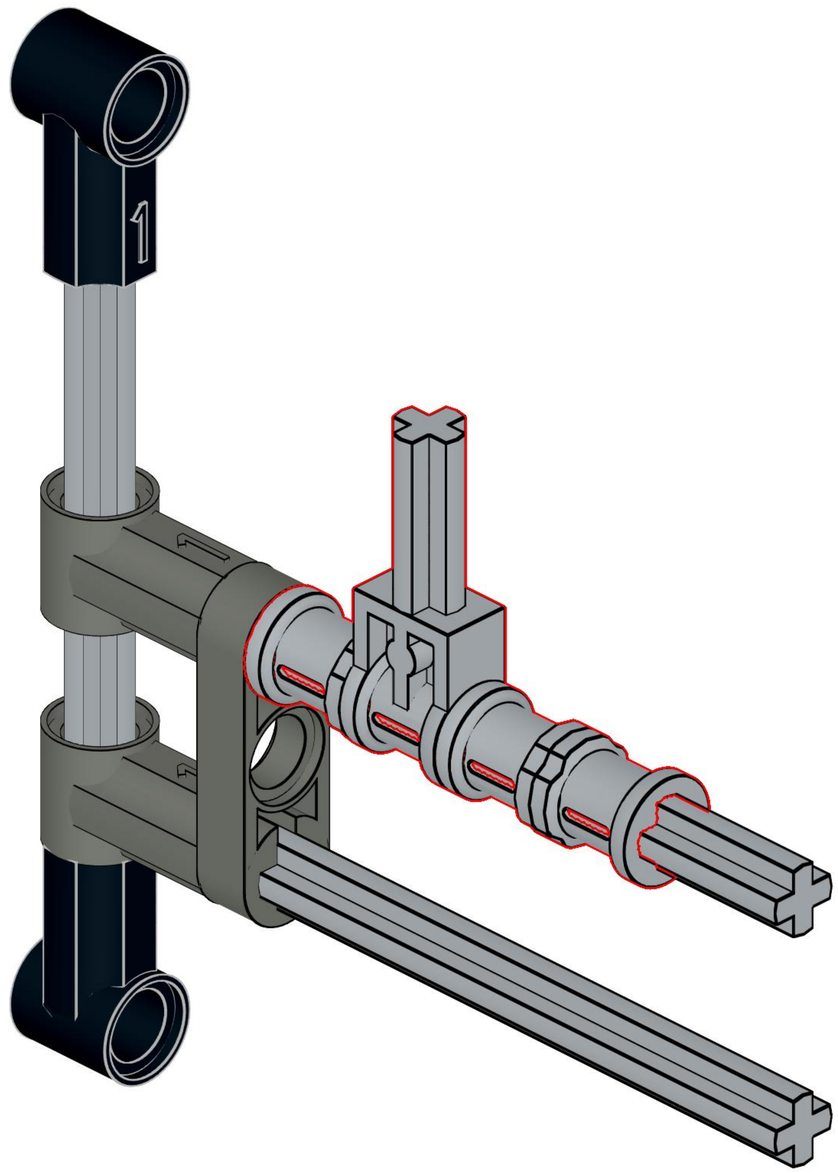

31

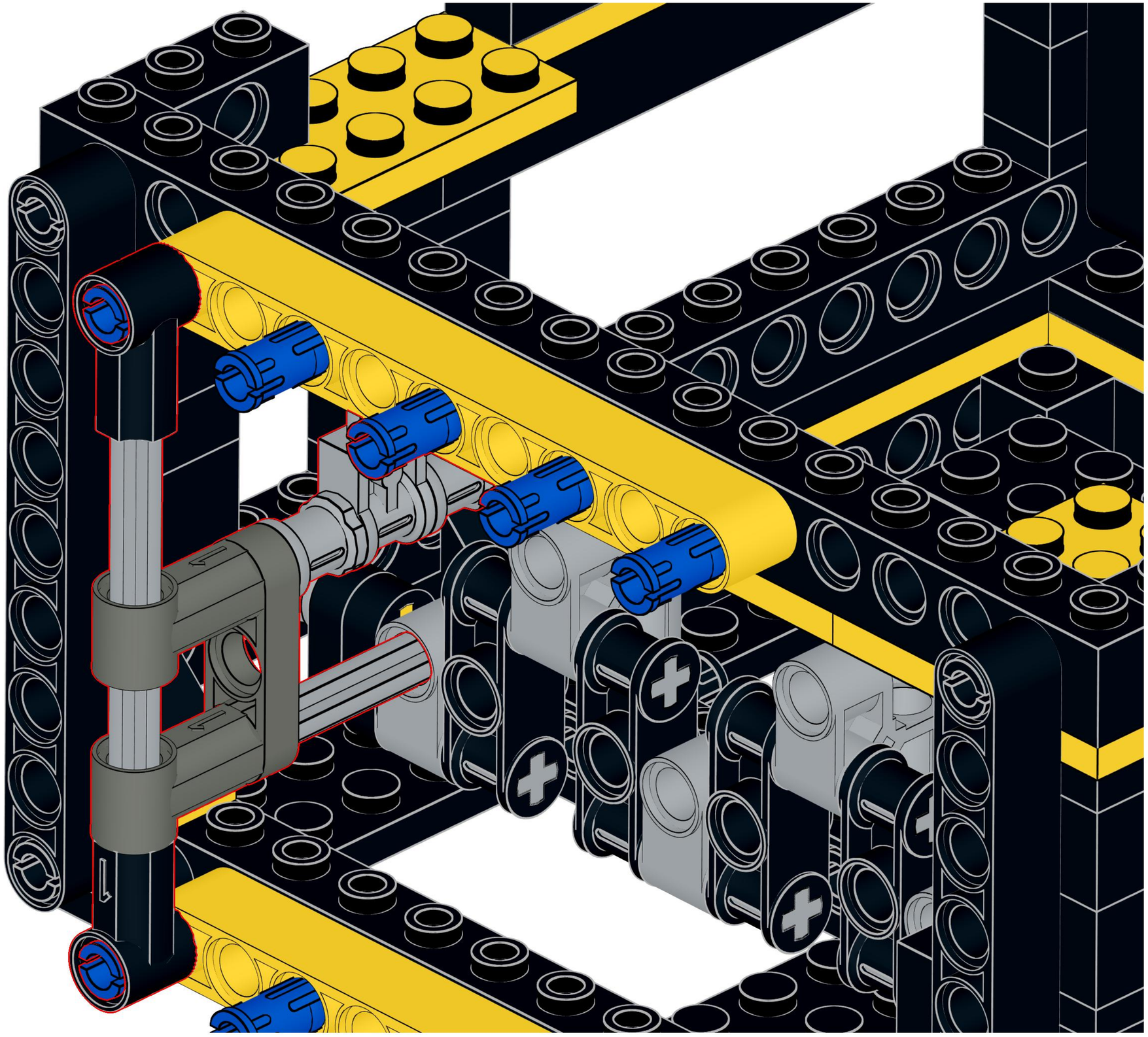

Alternate view
on next page.

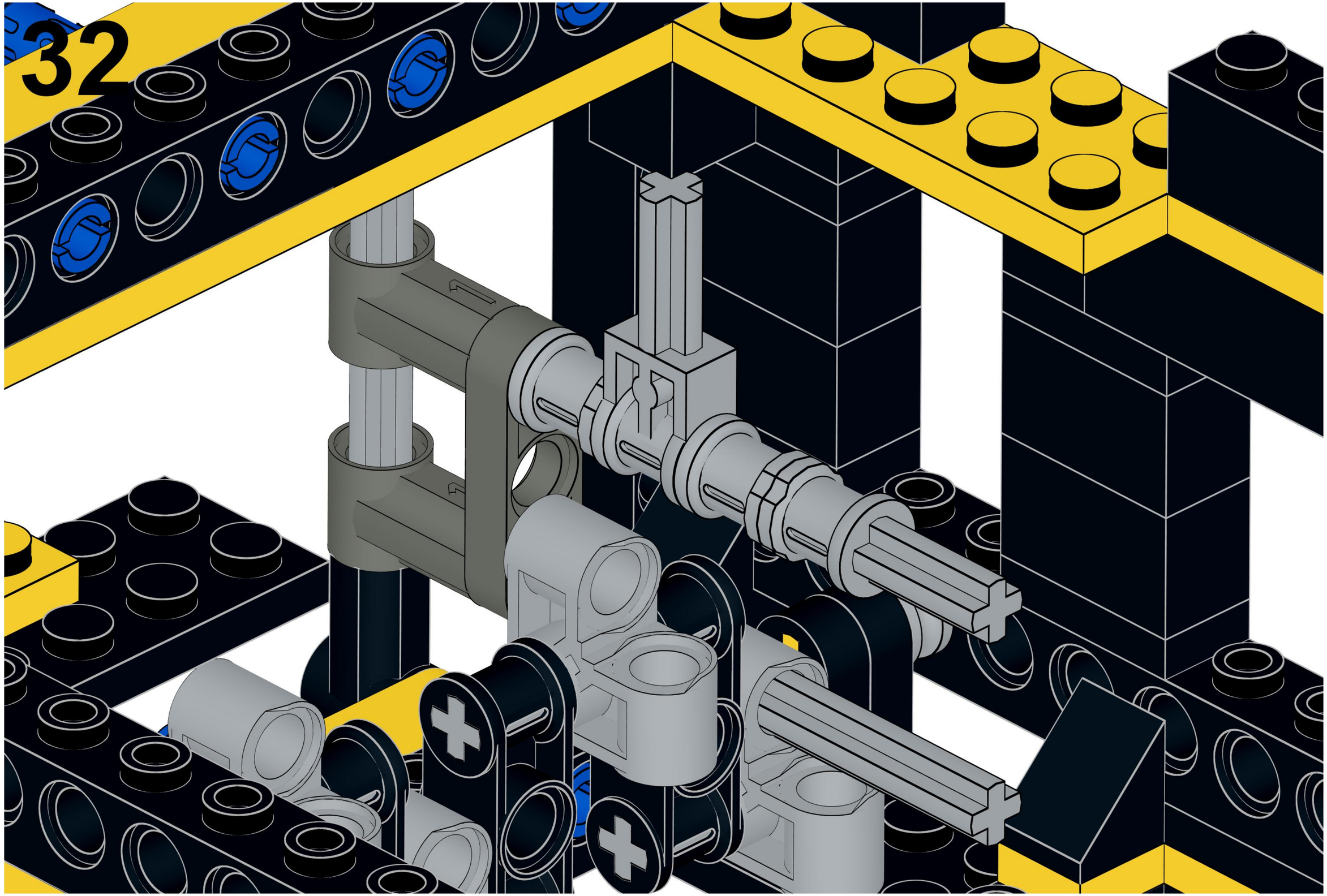
32

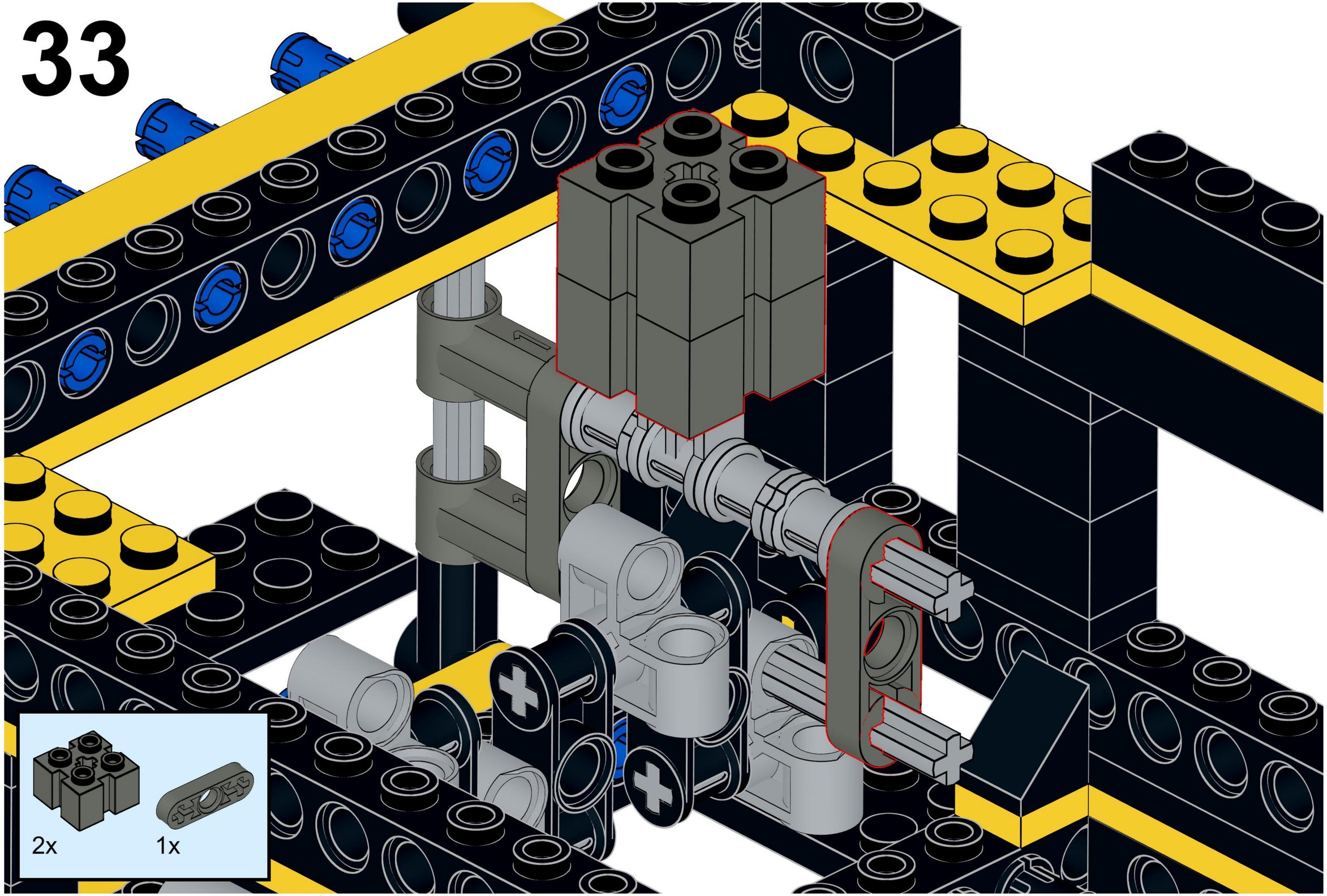
2x
1x

34

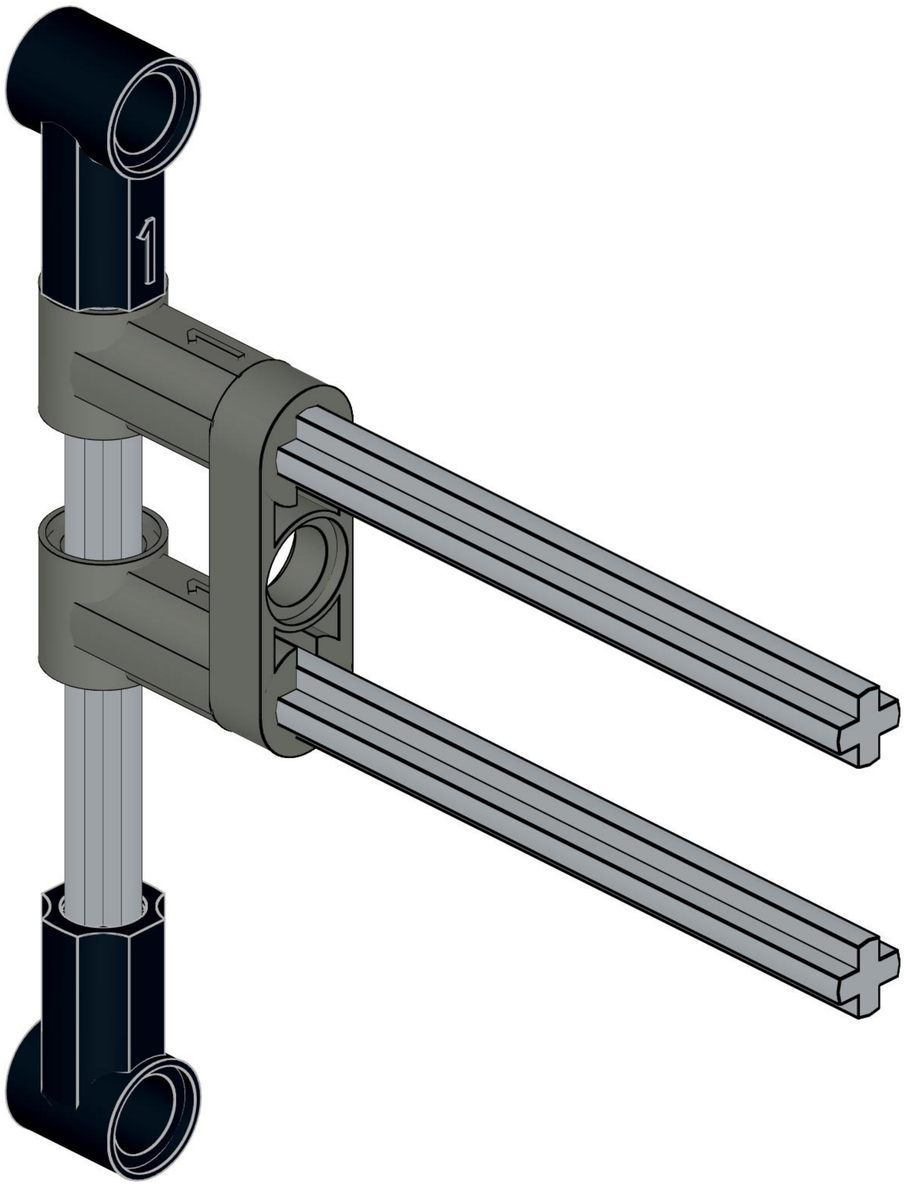

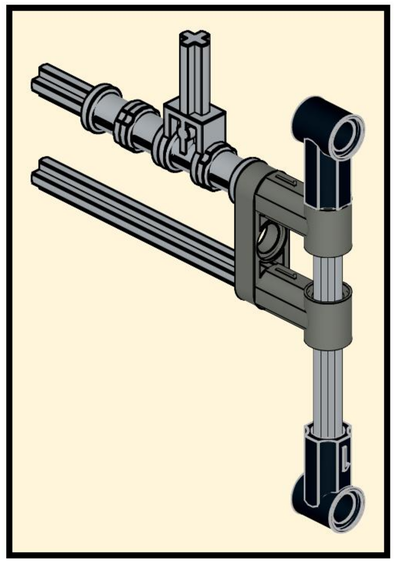

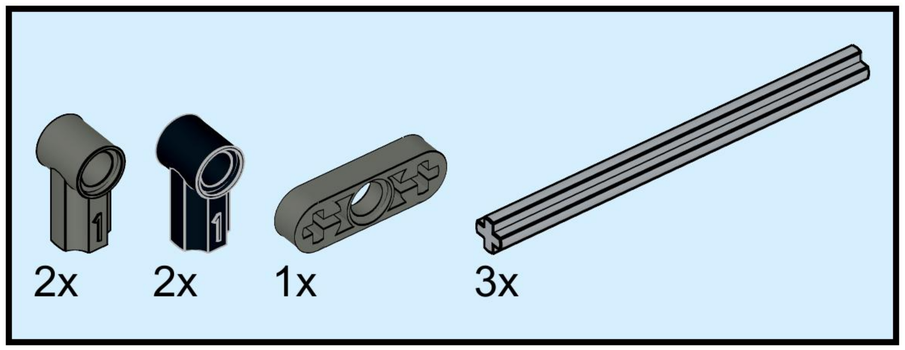

35

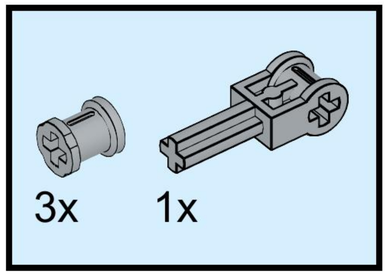

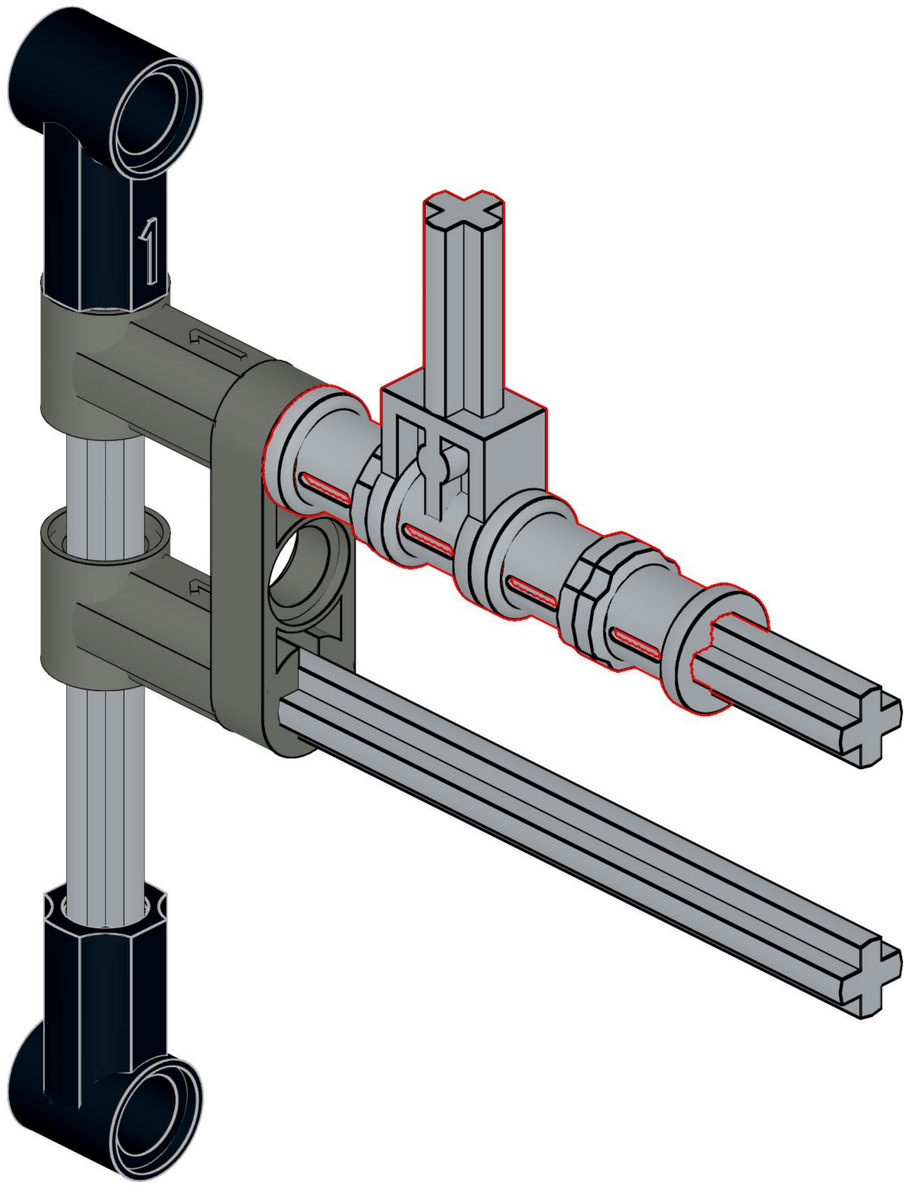

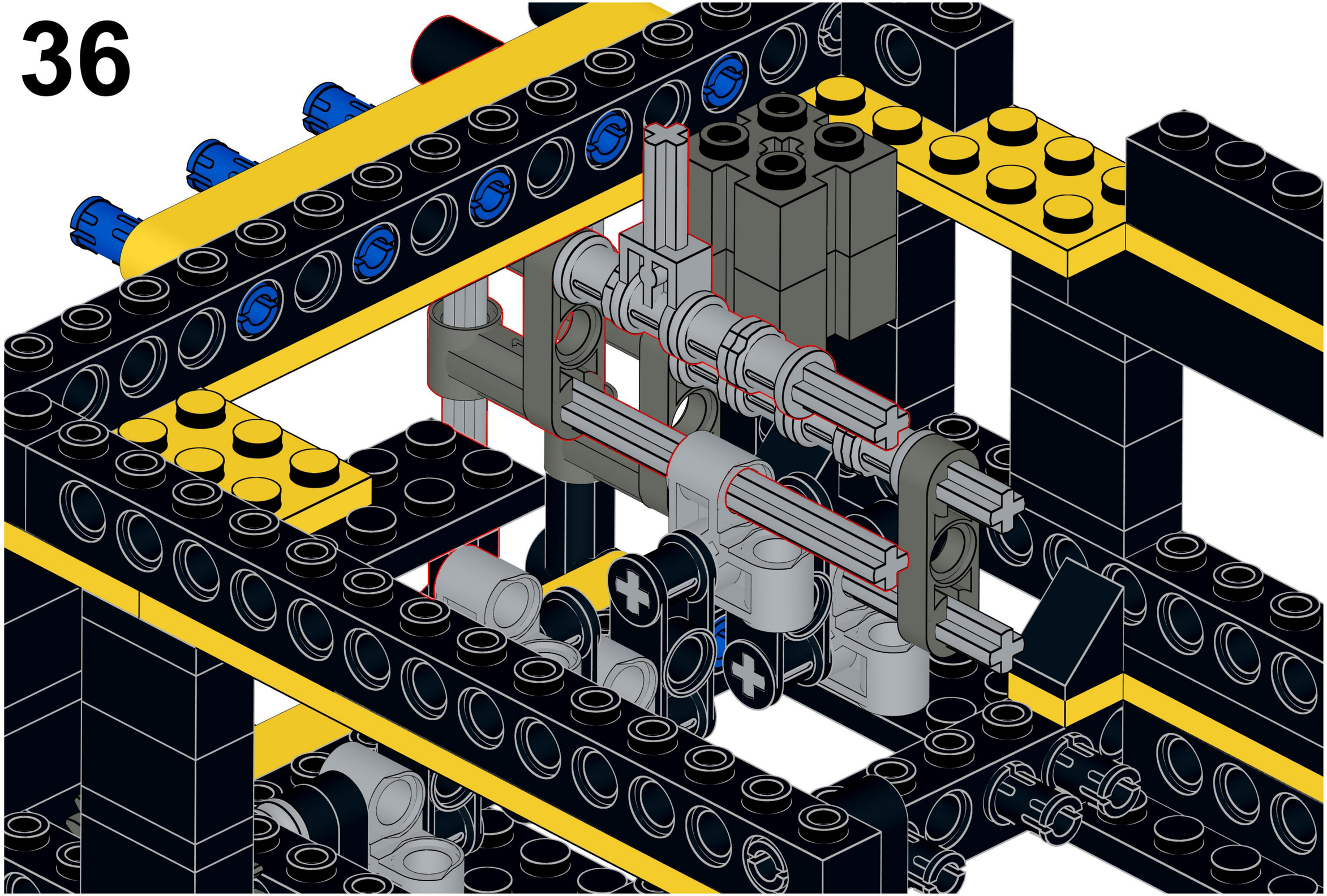

37

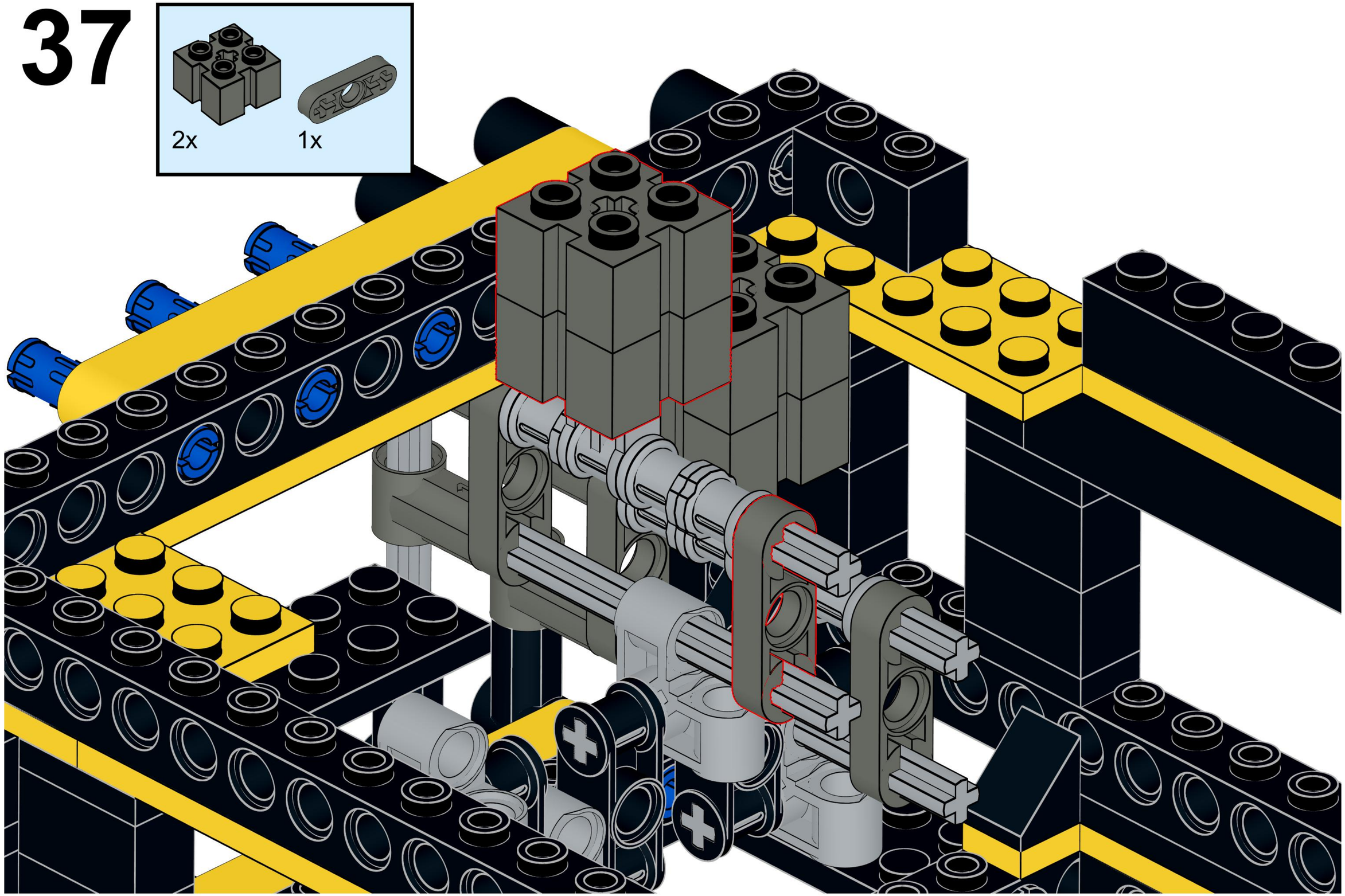

38

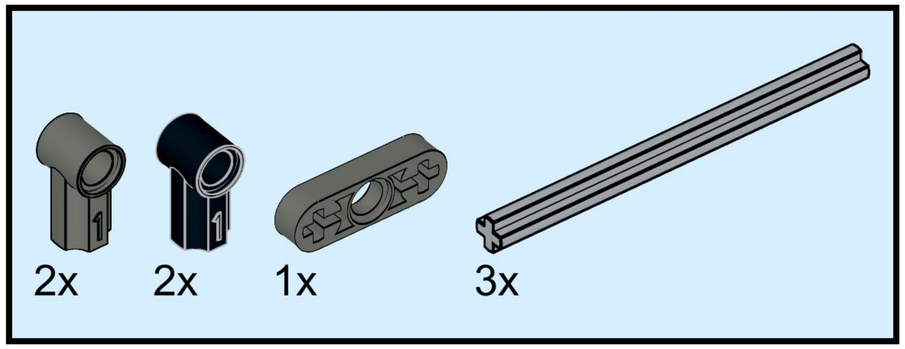

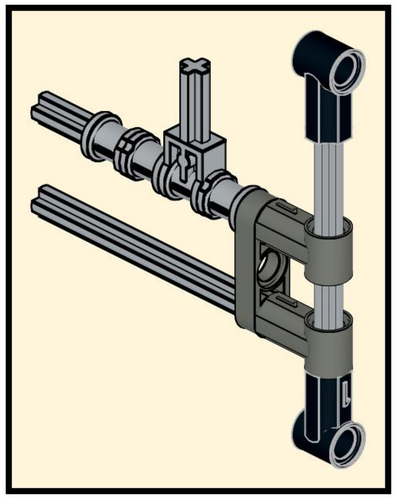

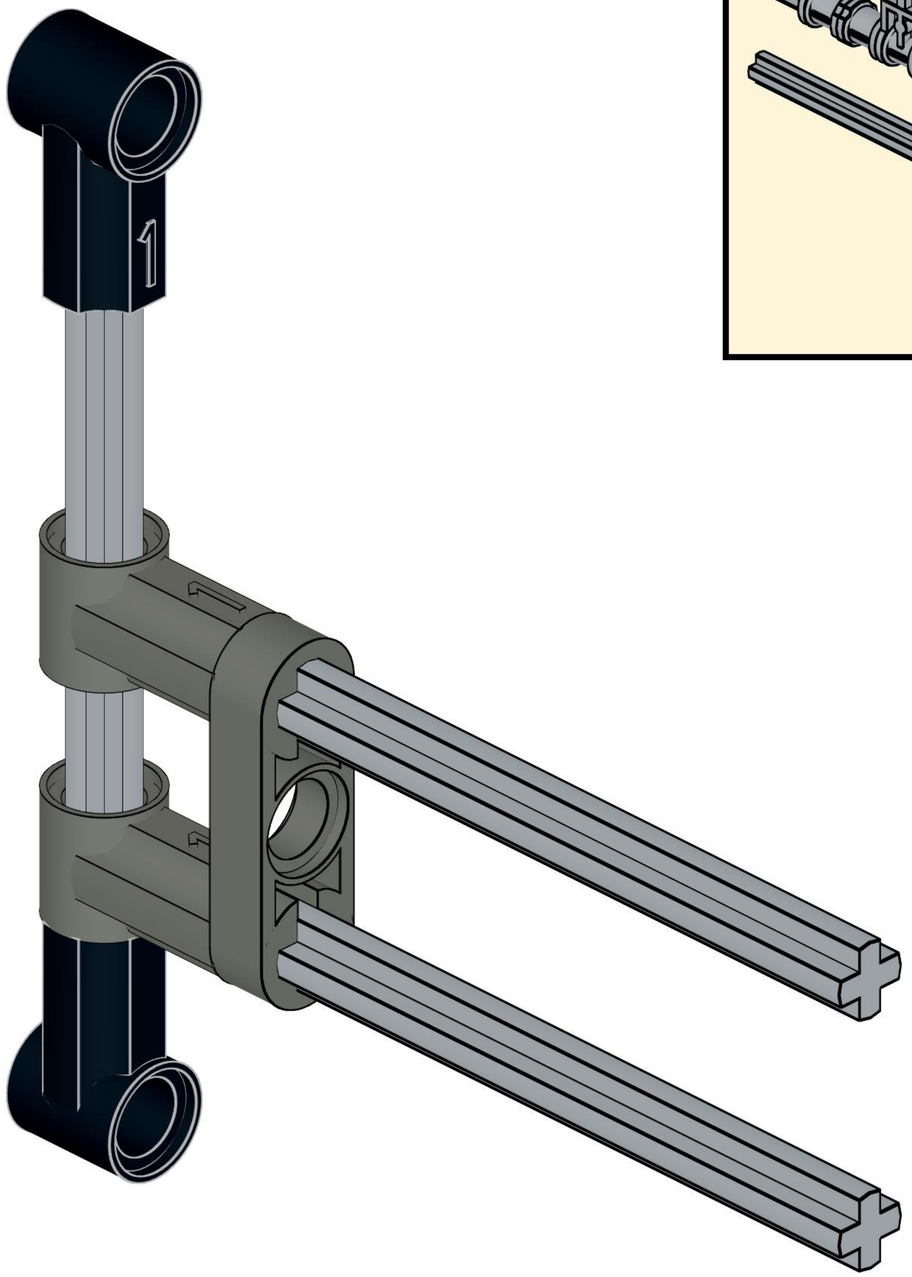

39

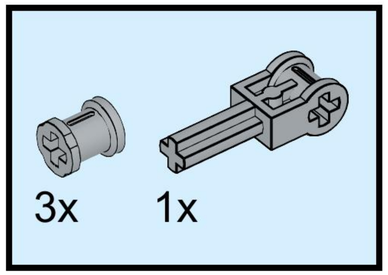

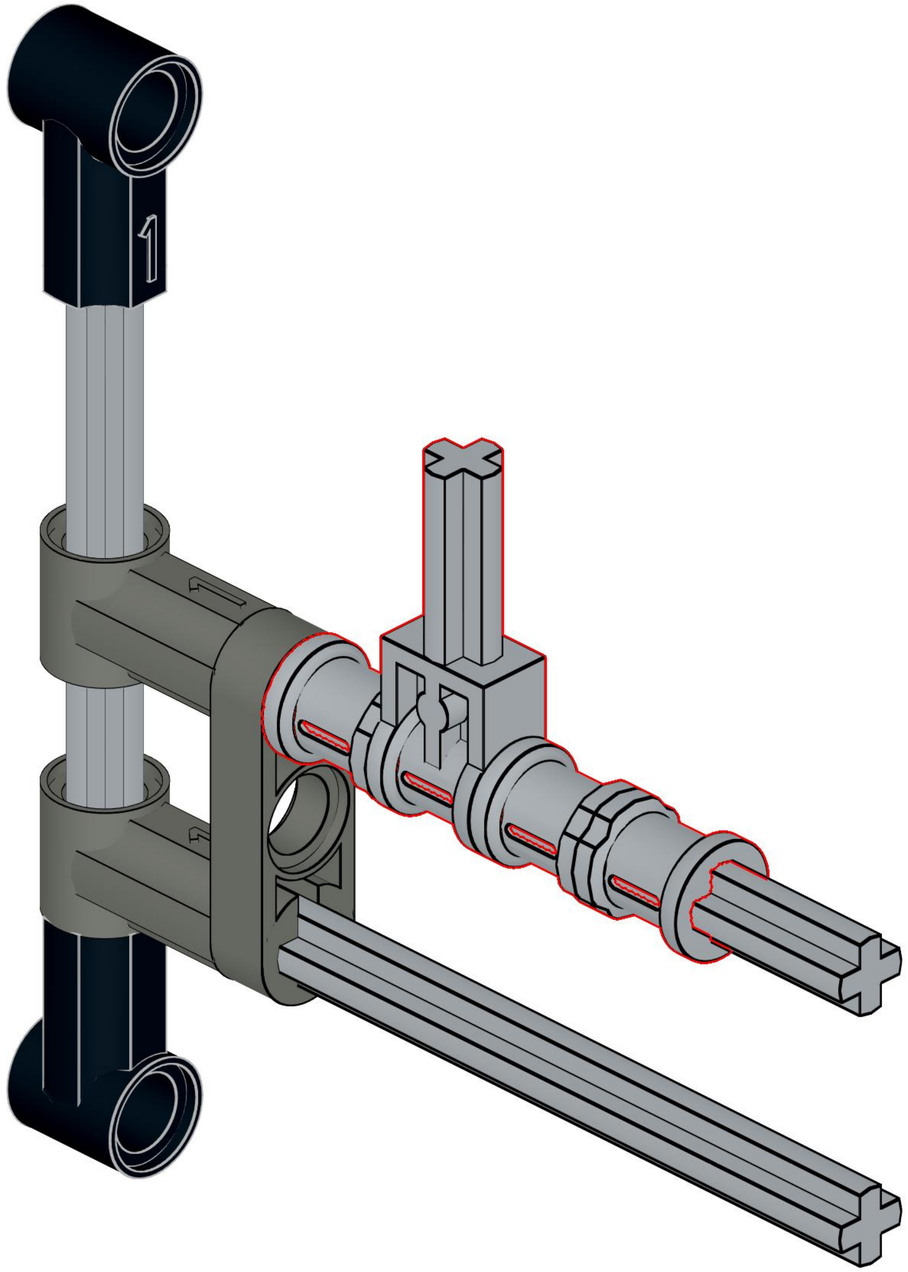

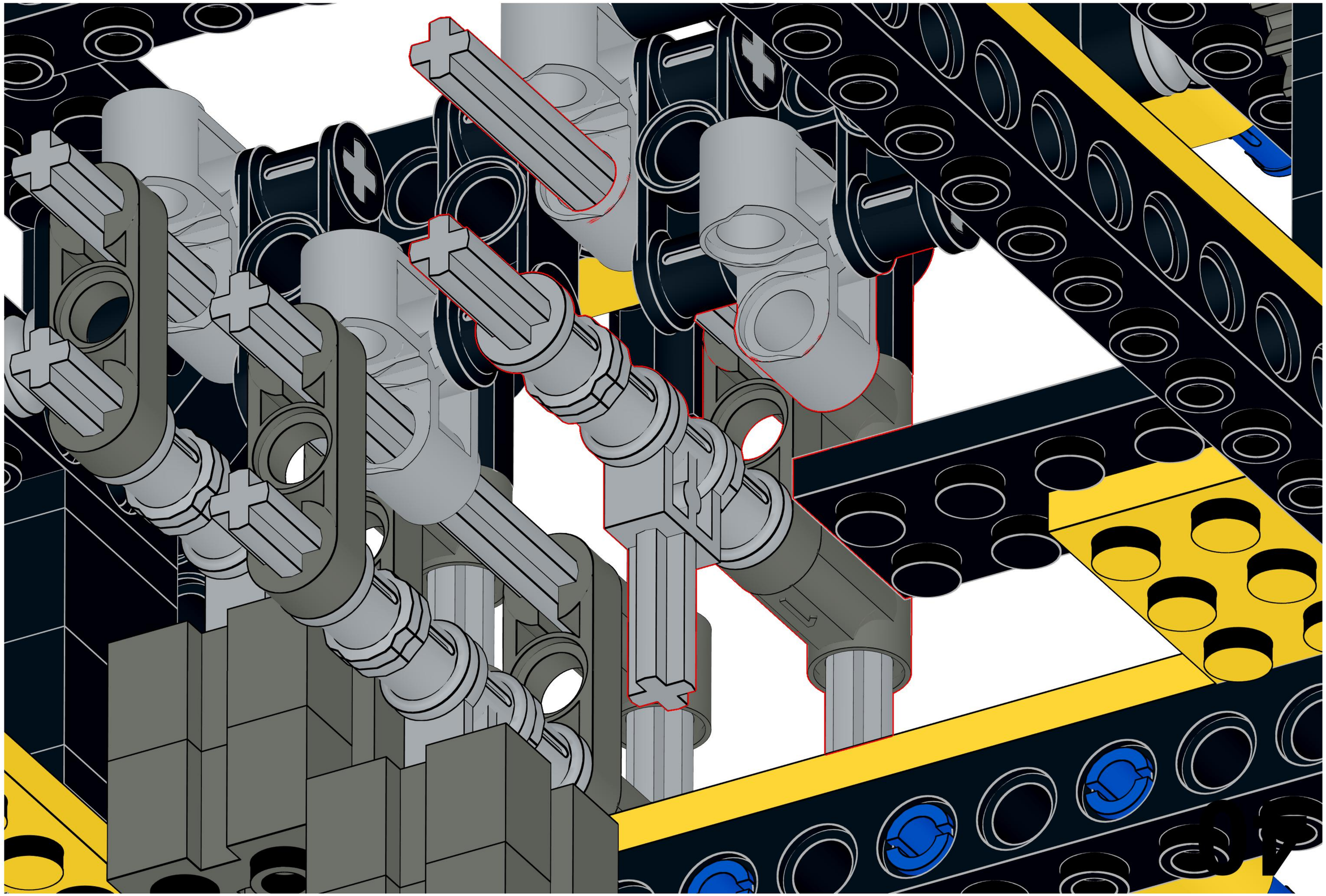

41

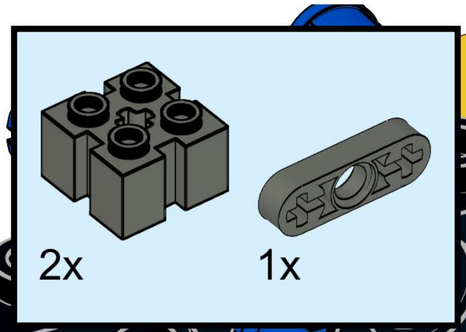

42

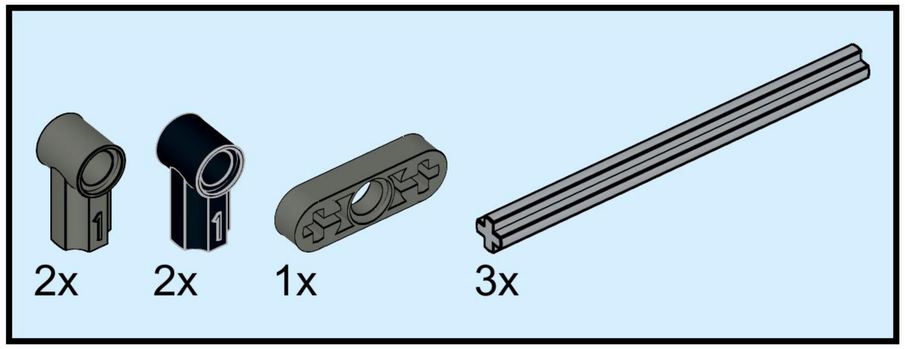

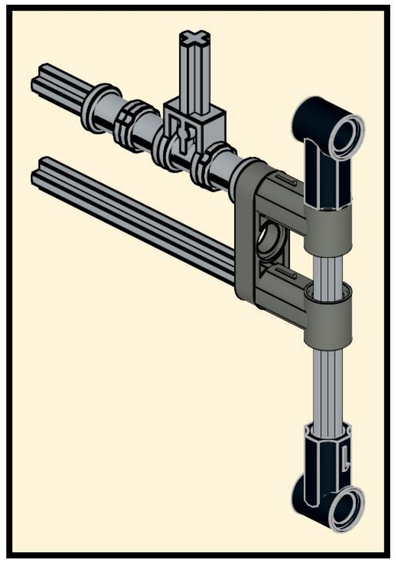

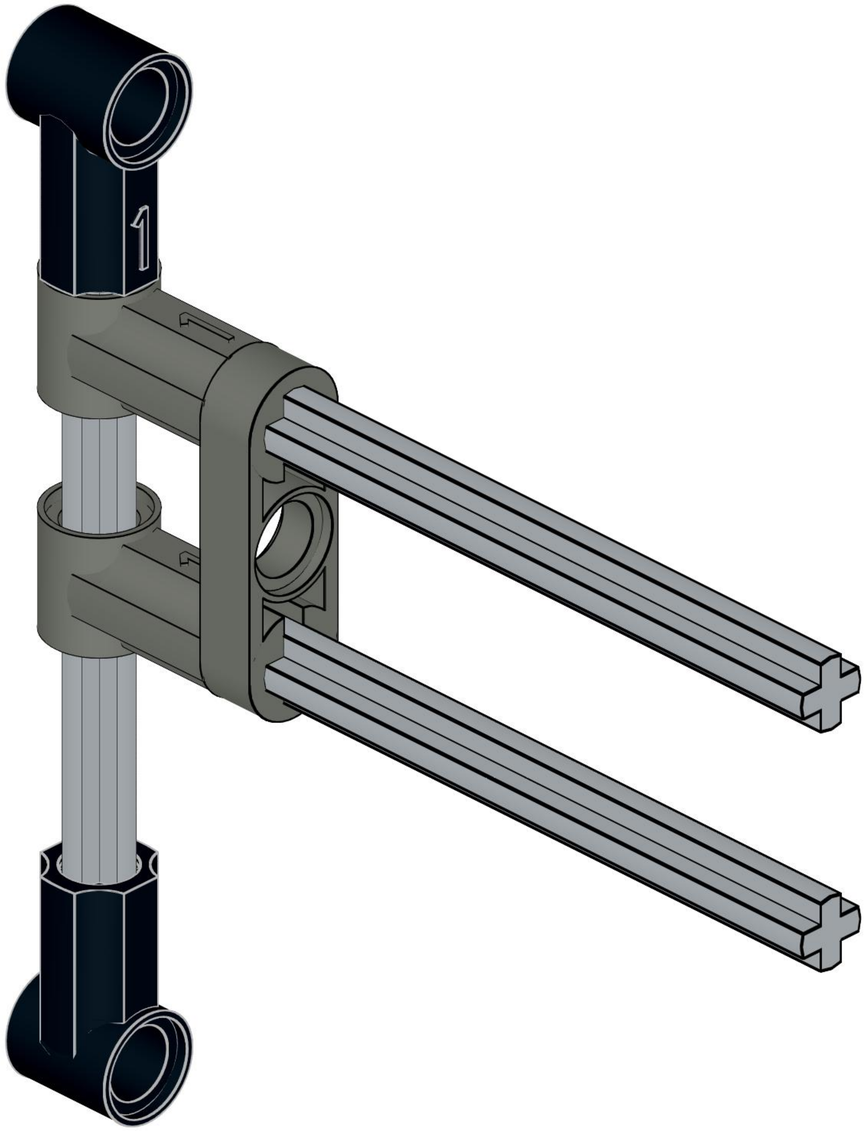

43

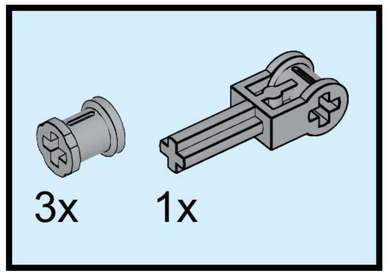

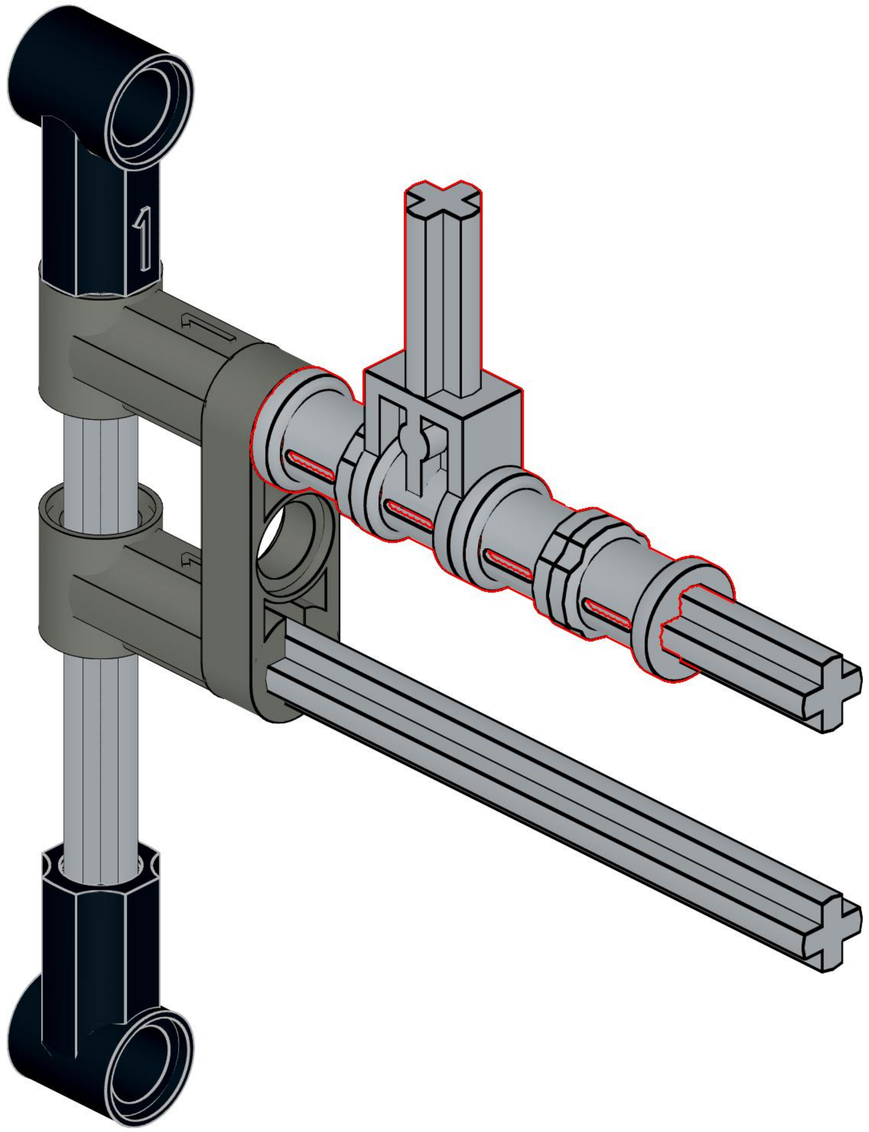

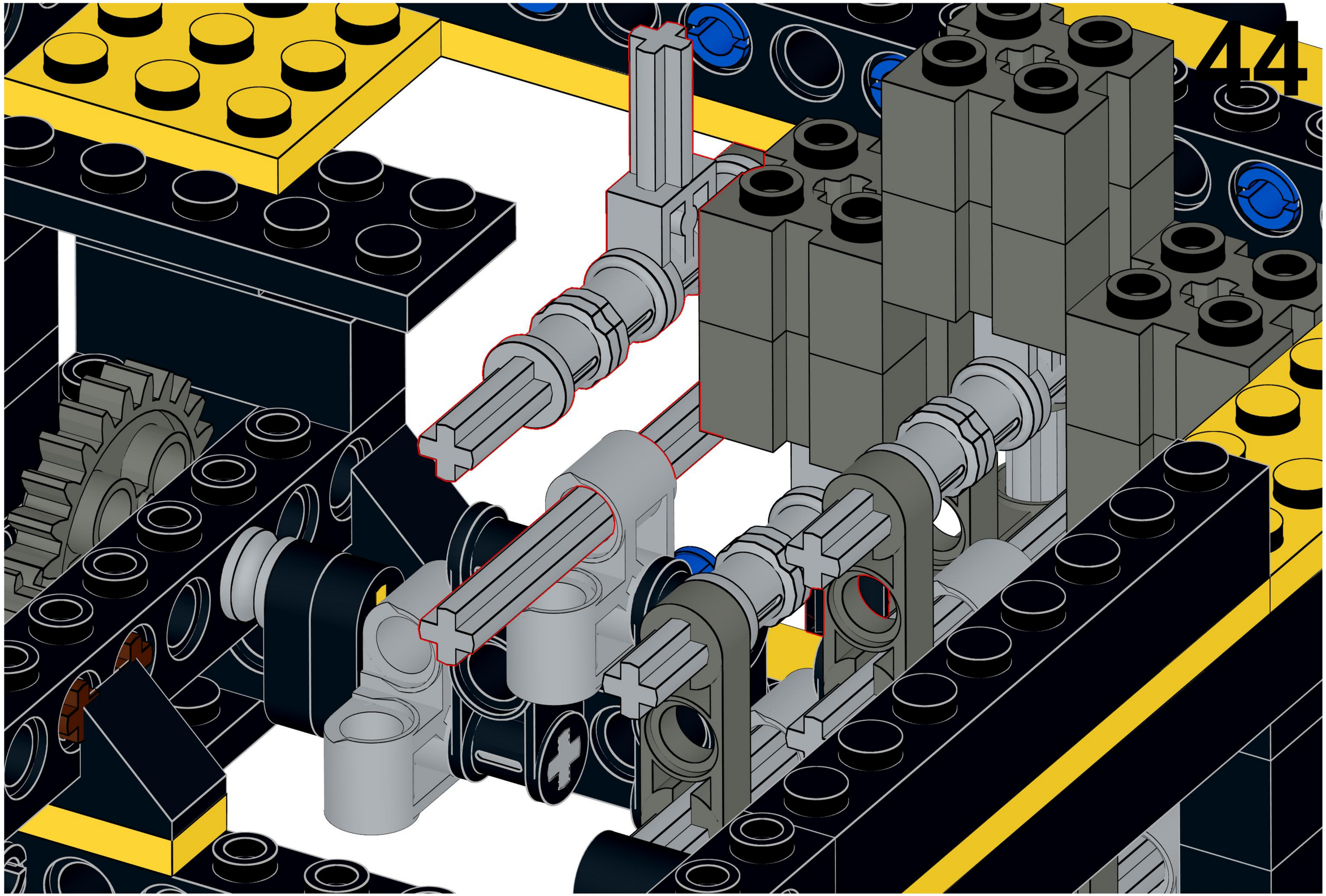
44

45

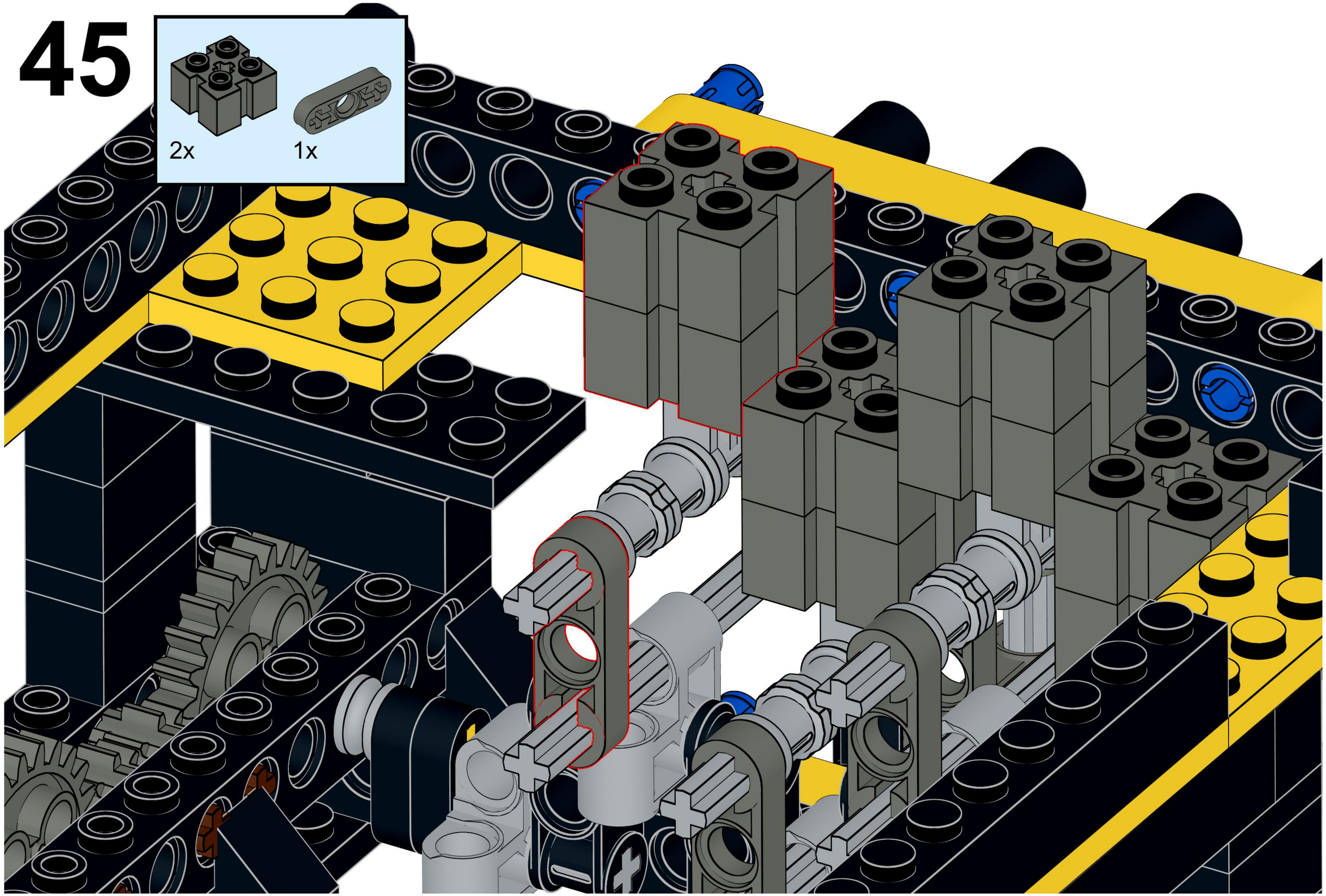

46

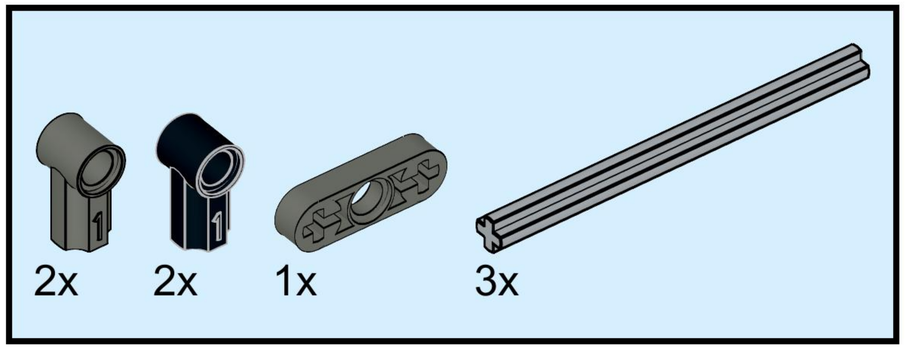

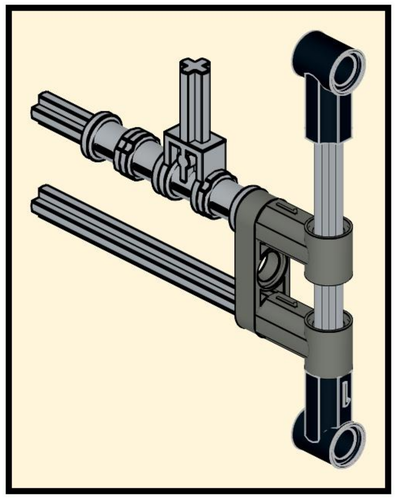

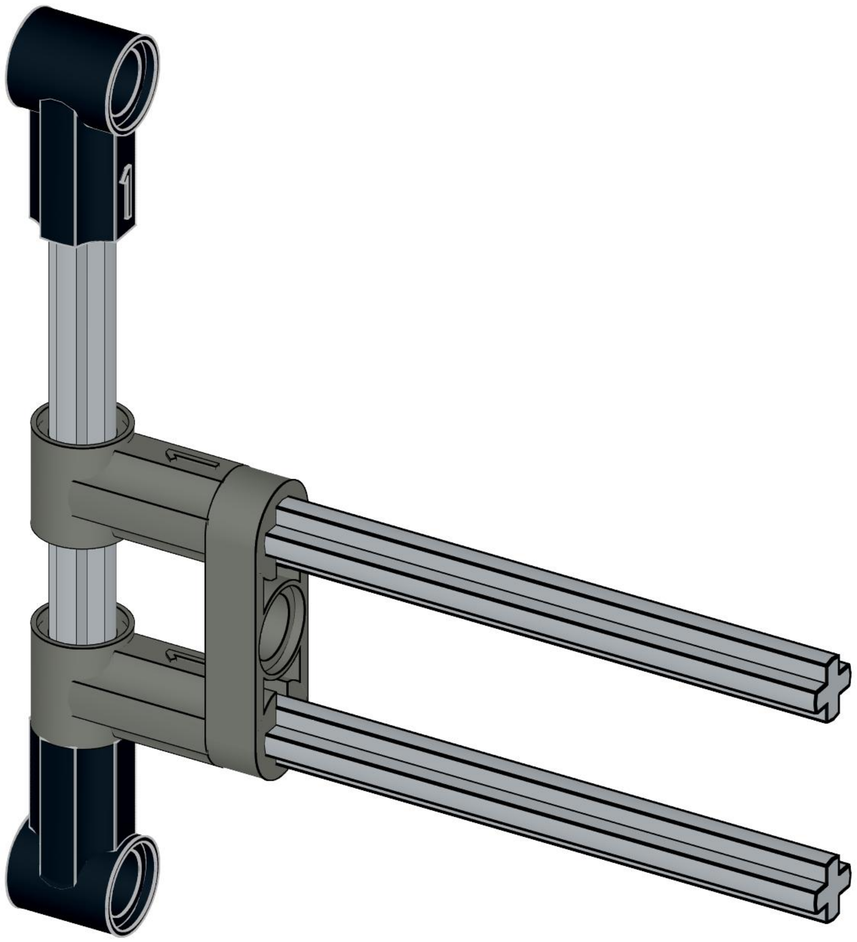

47

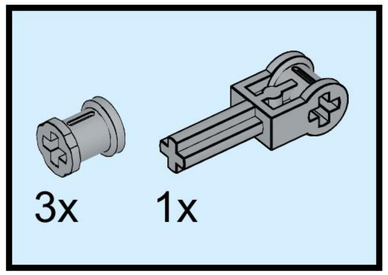

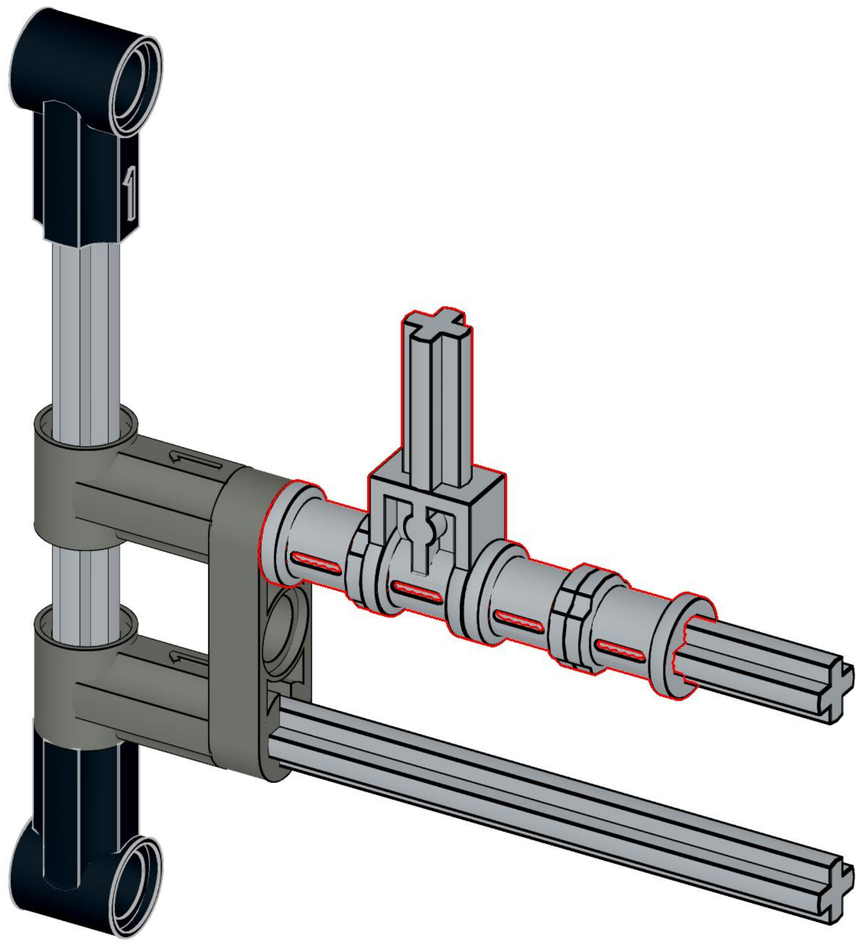

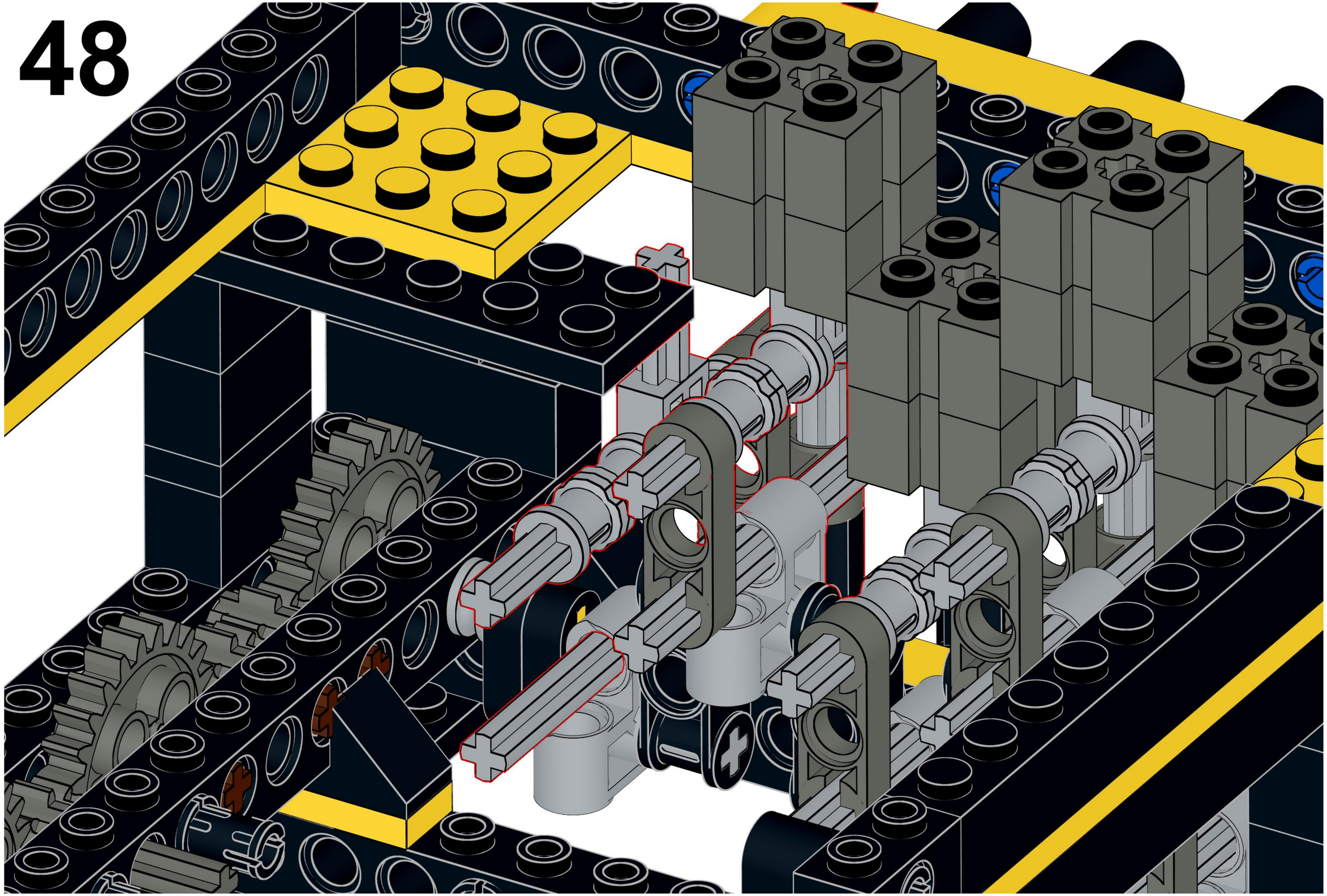

49

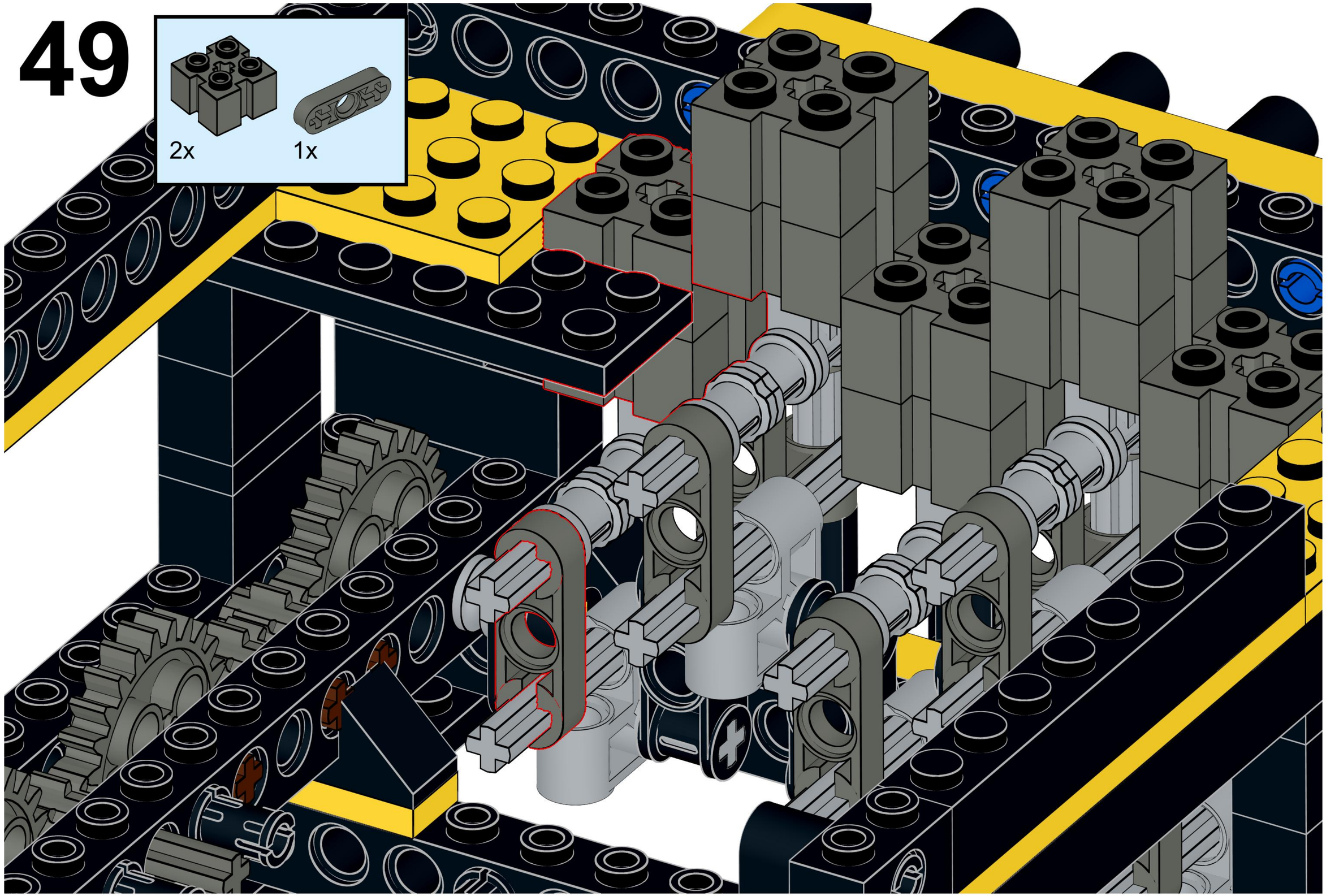

50

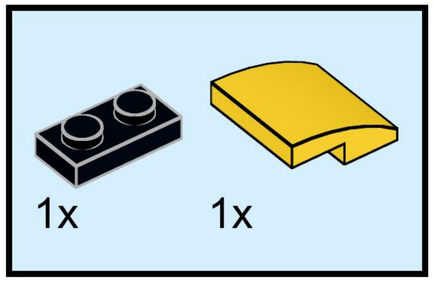

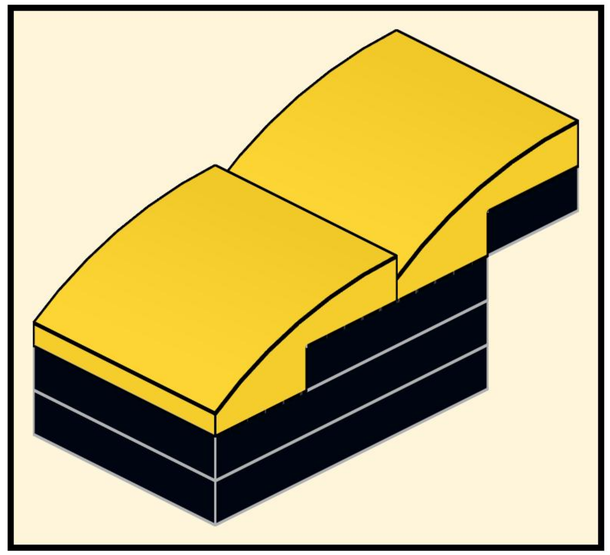

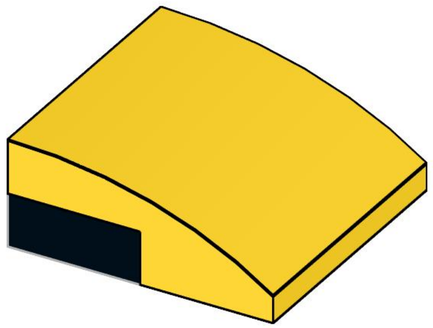

51

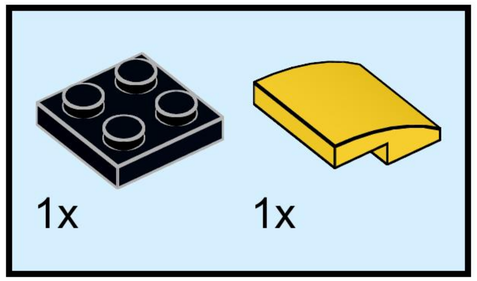

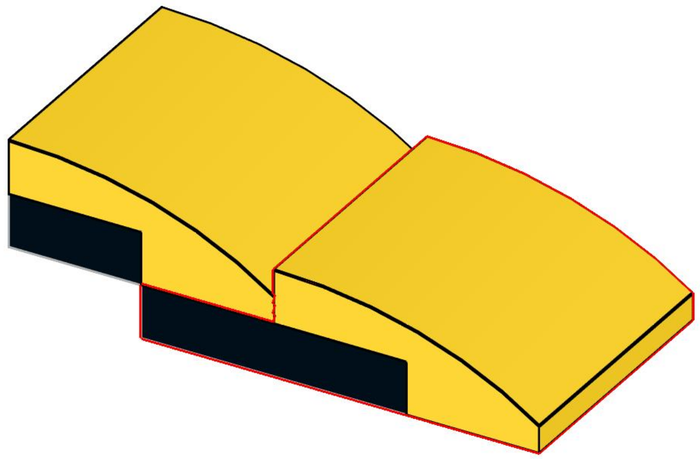

52

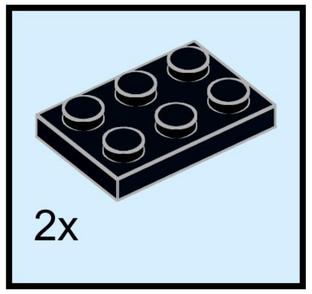

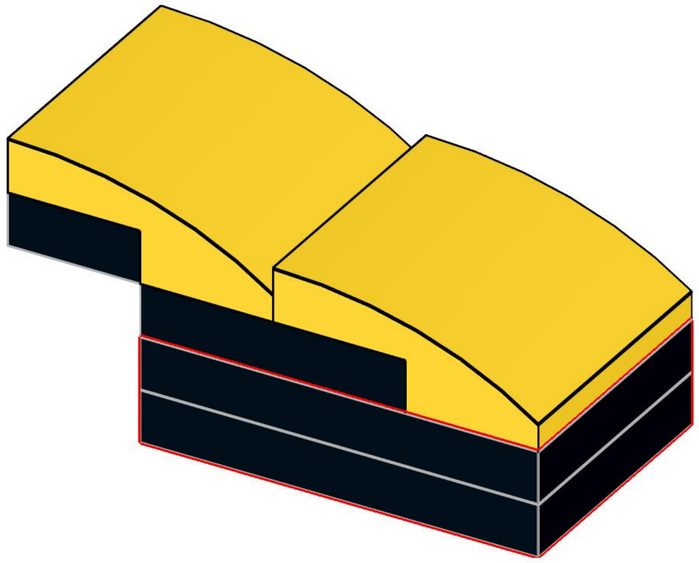

53

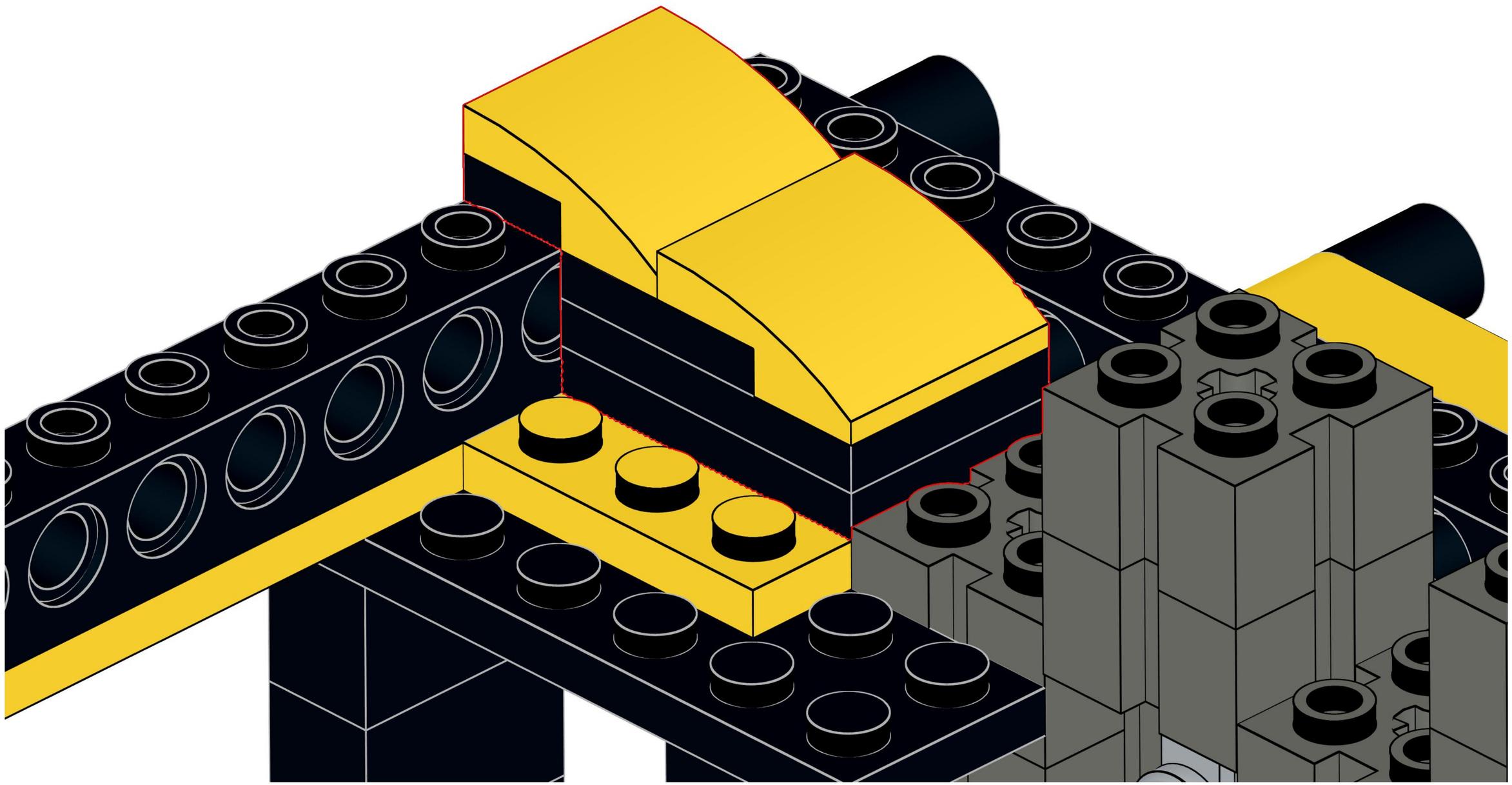

54

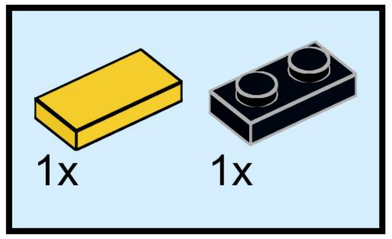

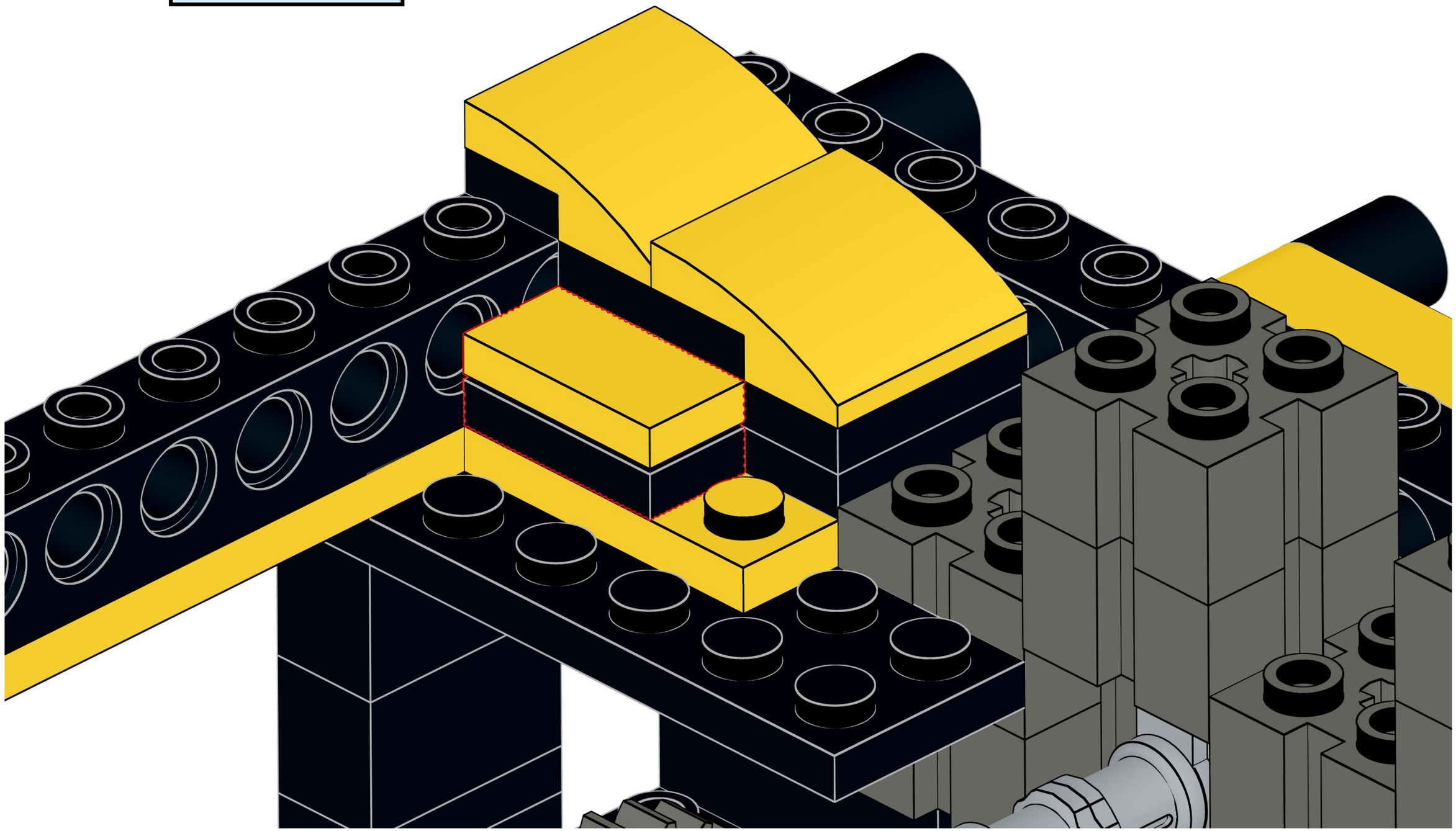

55

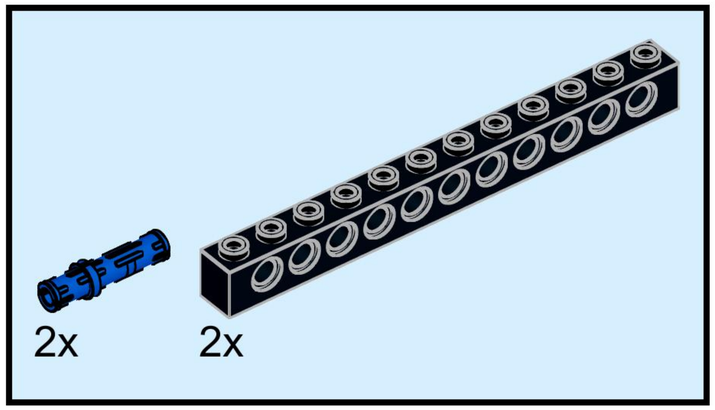

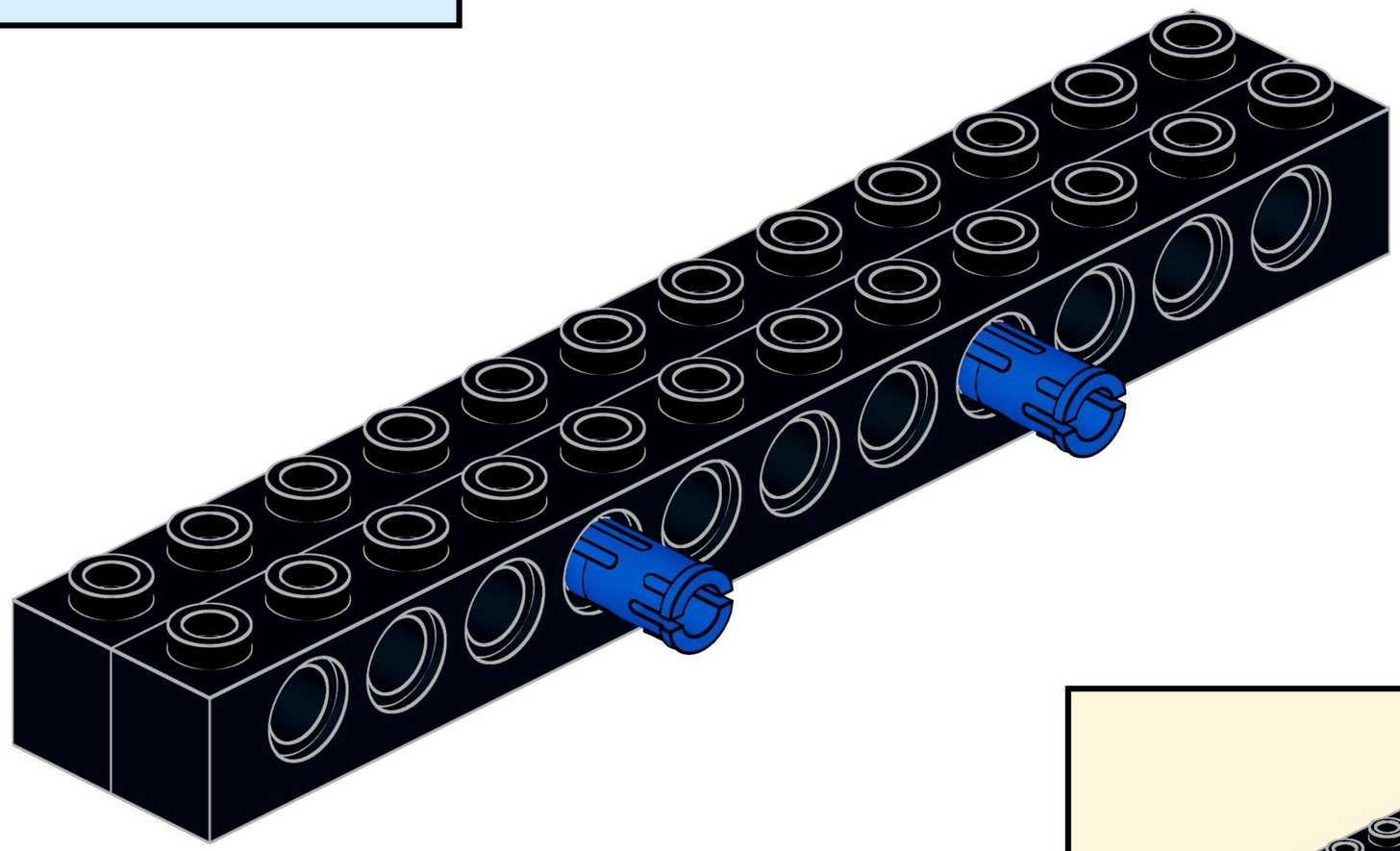

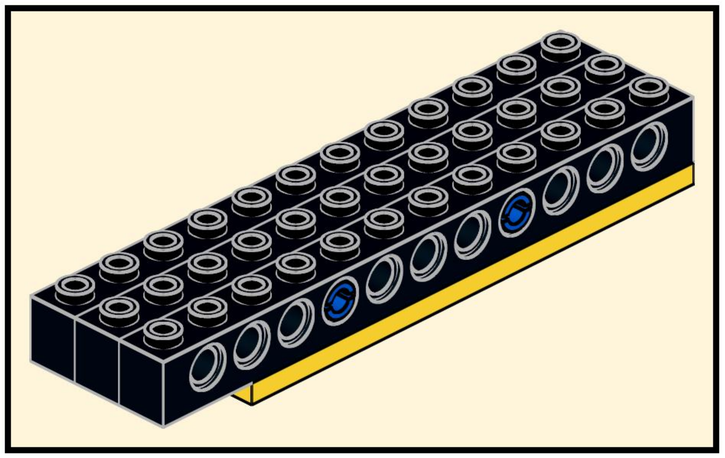

56

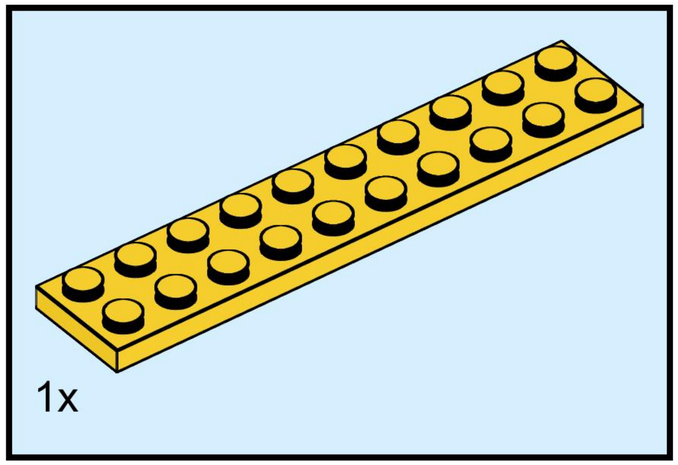

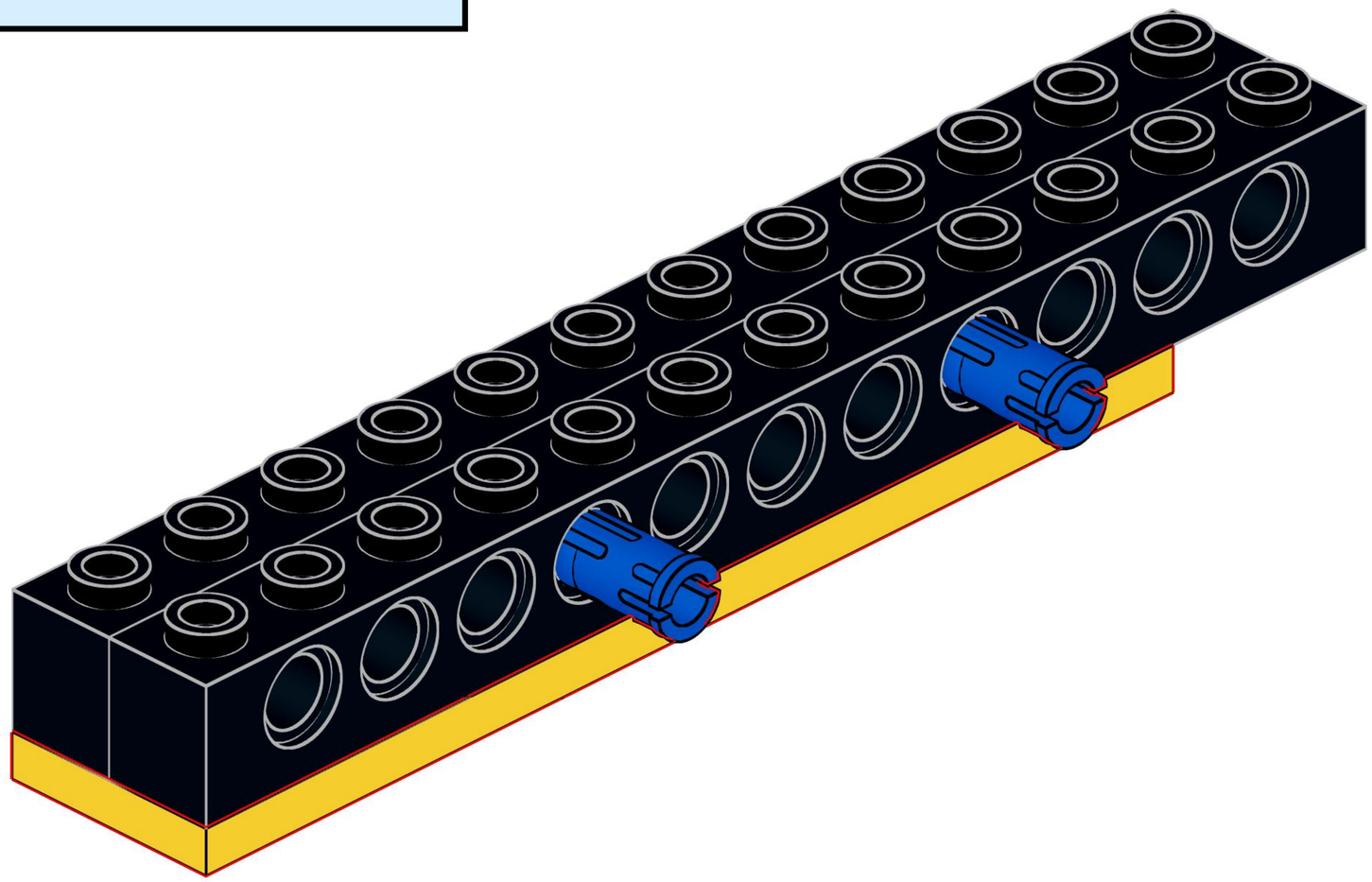

57

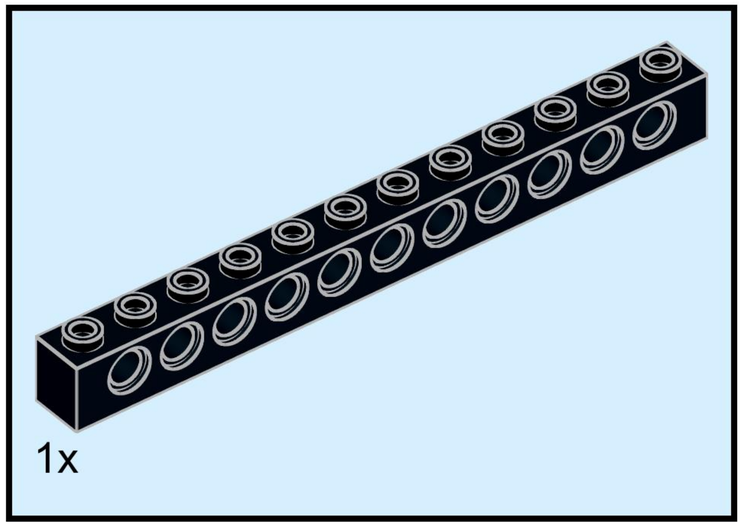

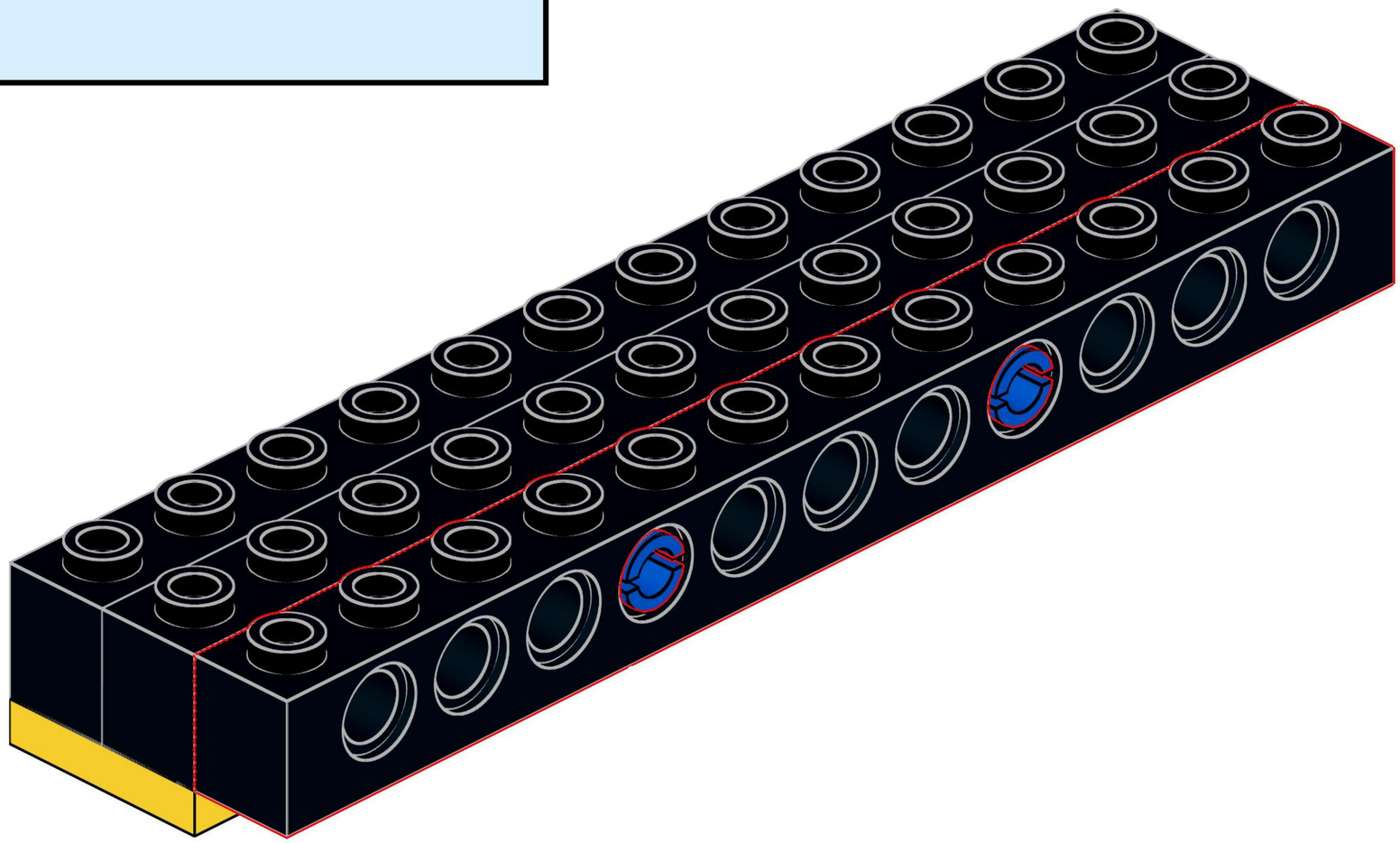

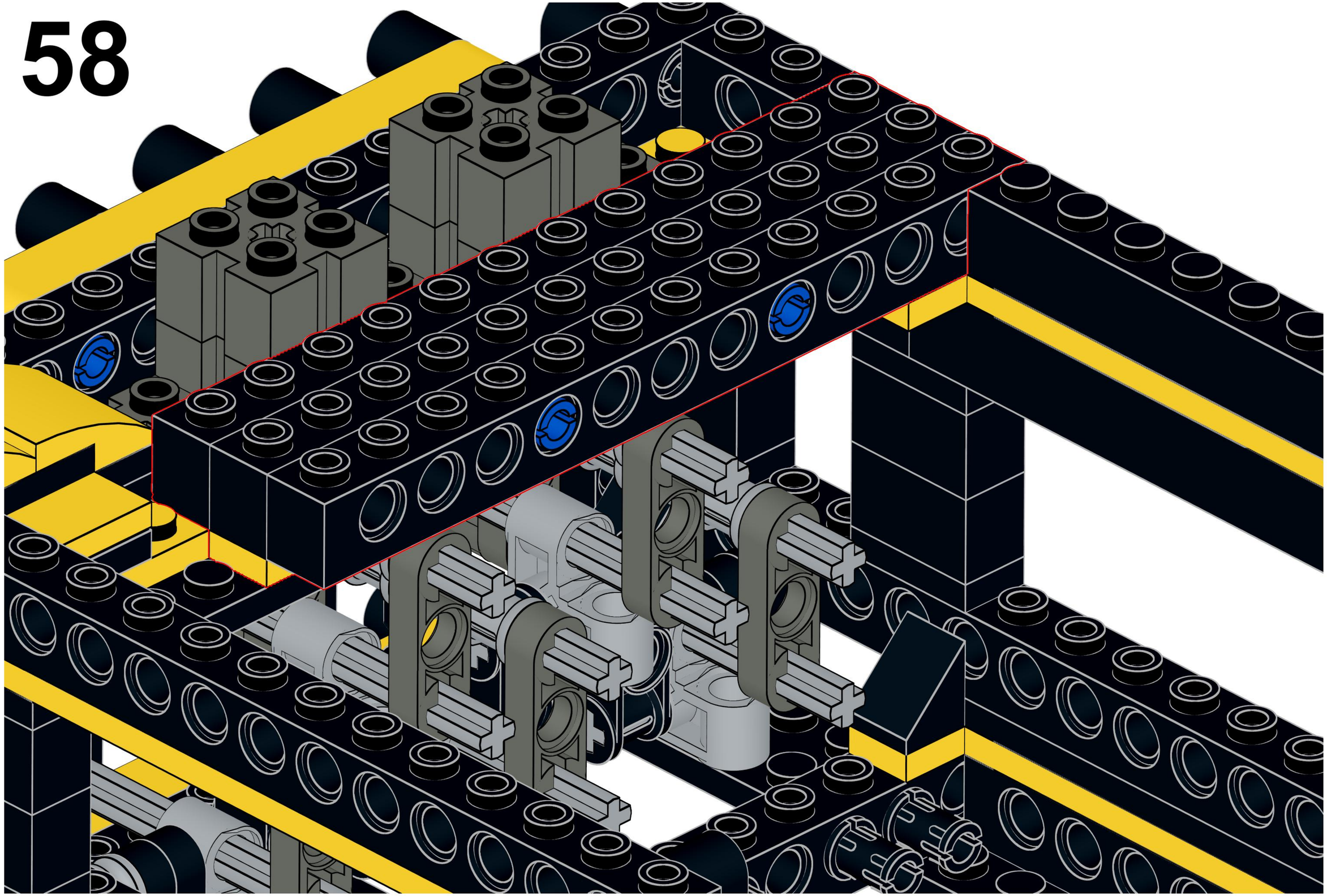

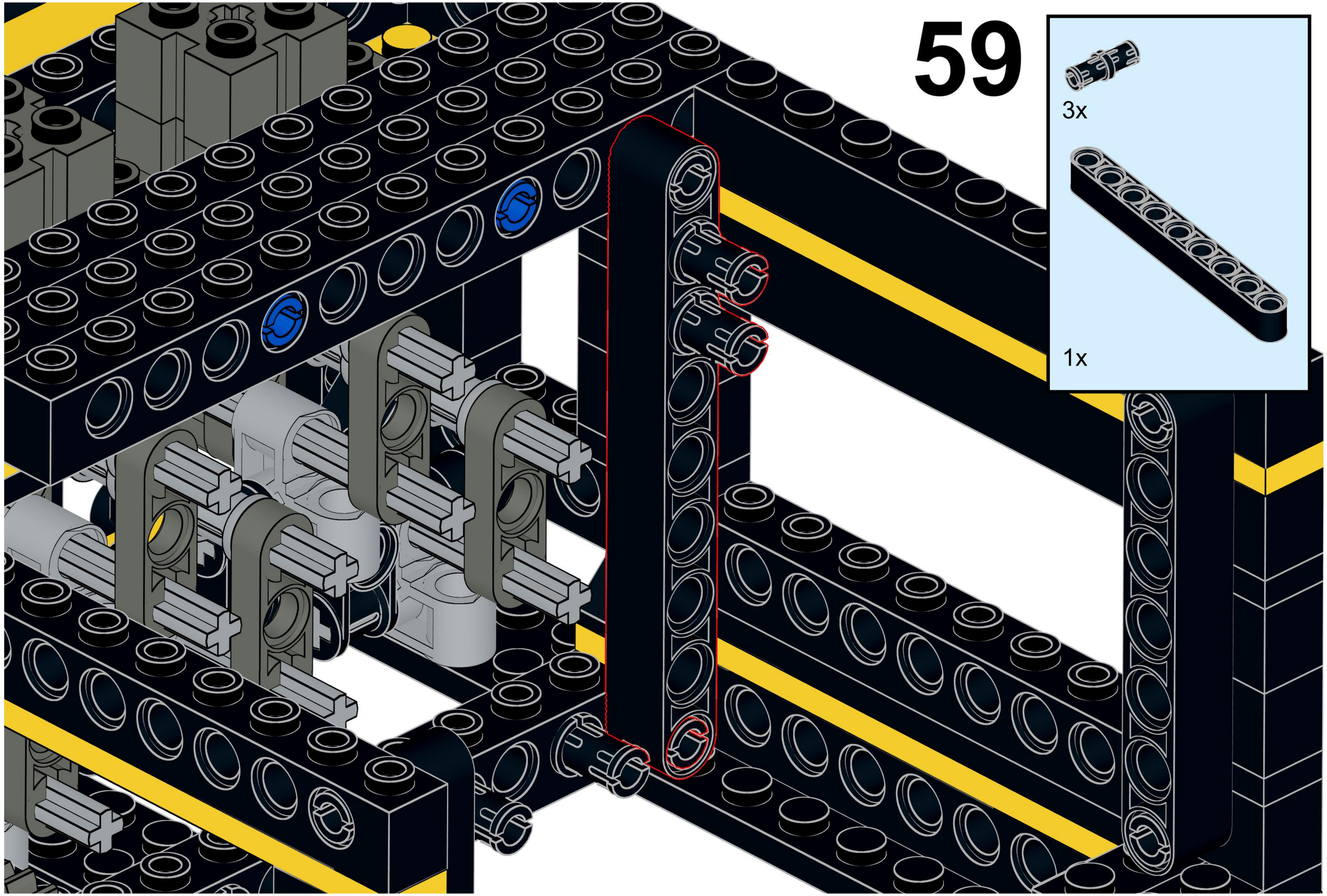
59
3x
1x

60

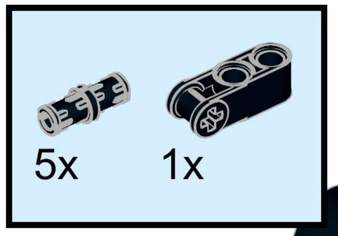

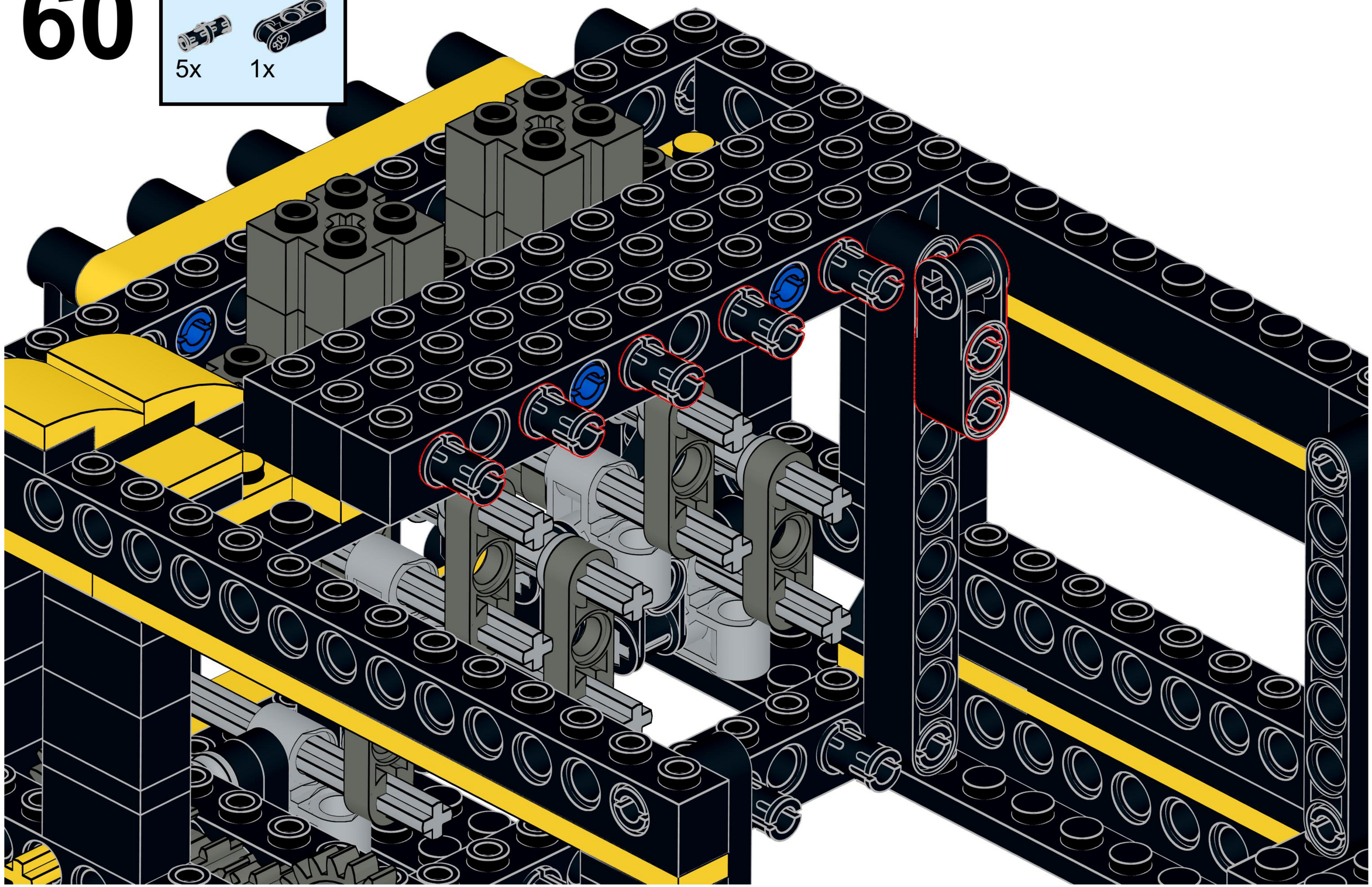

61

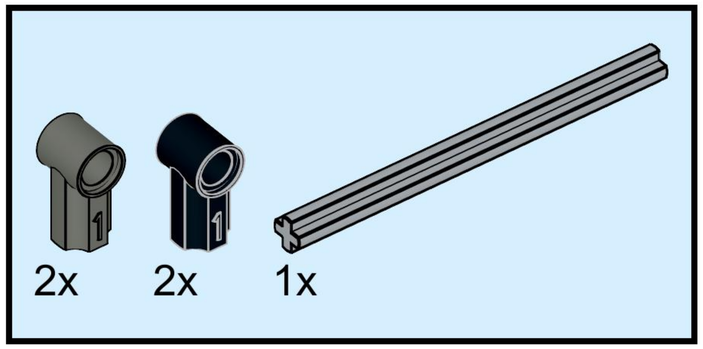

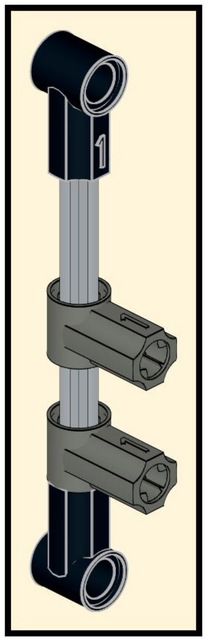

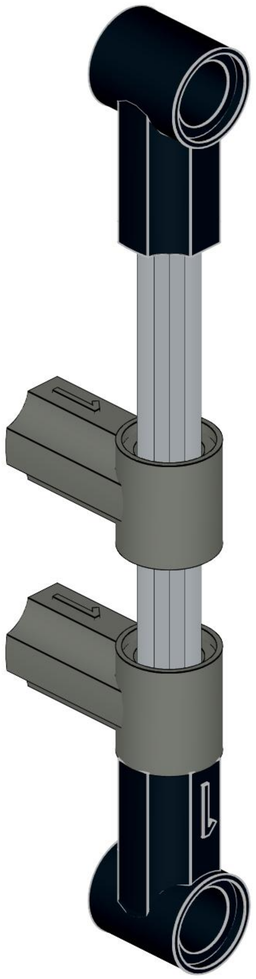

Five (5) of these assemblies will be constructed and attached in an identical manner.
All axles are 7L.

62

Note:

Attaching this assembly is easiest if the module is standing on its rear and the grey connectors are hanging vertically. Then slide the assembly down onto the axles.

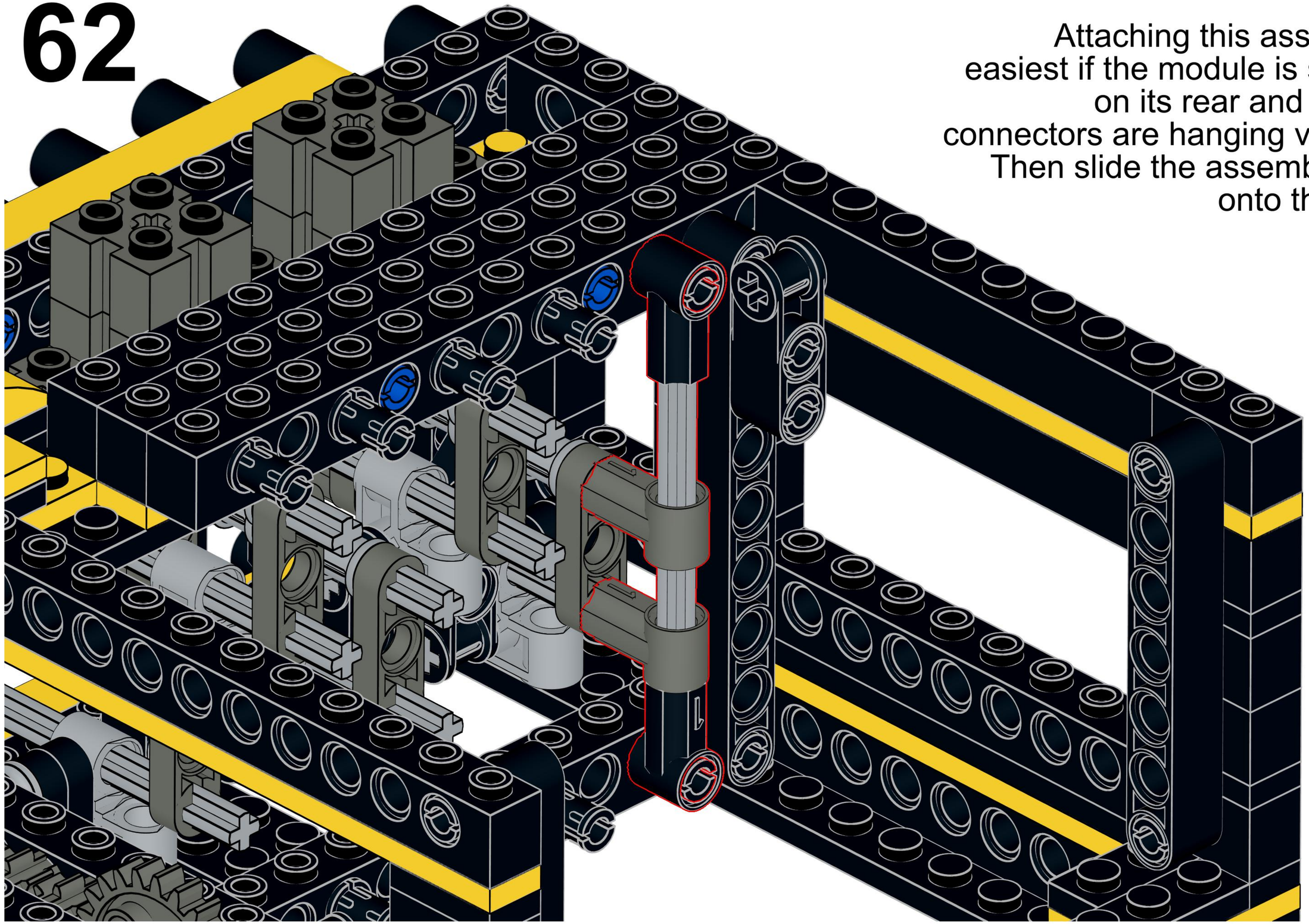

63

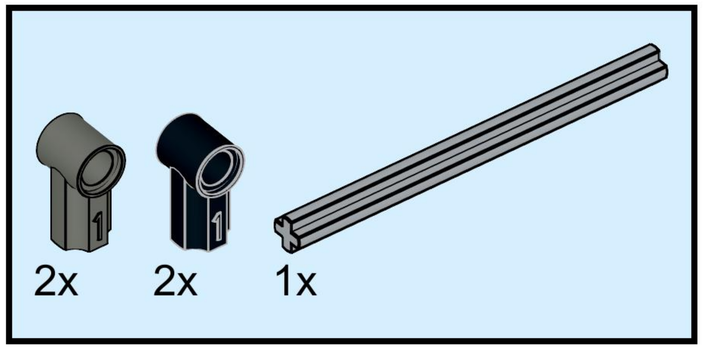

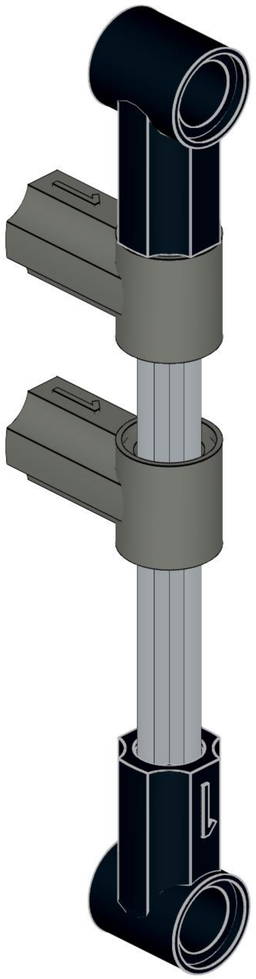

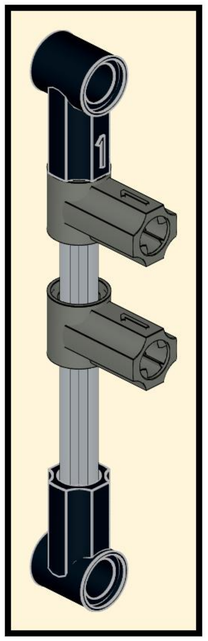

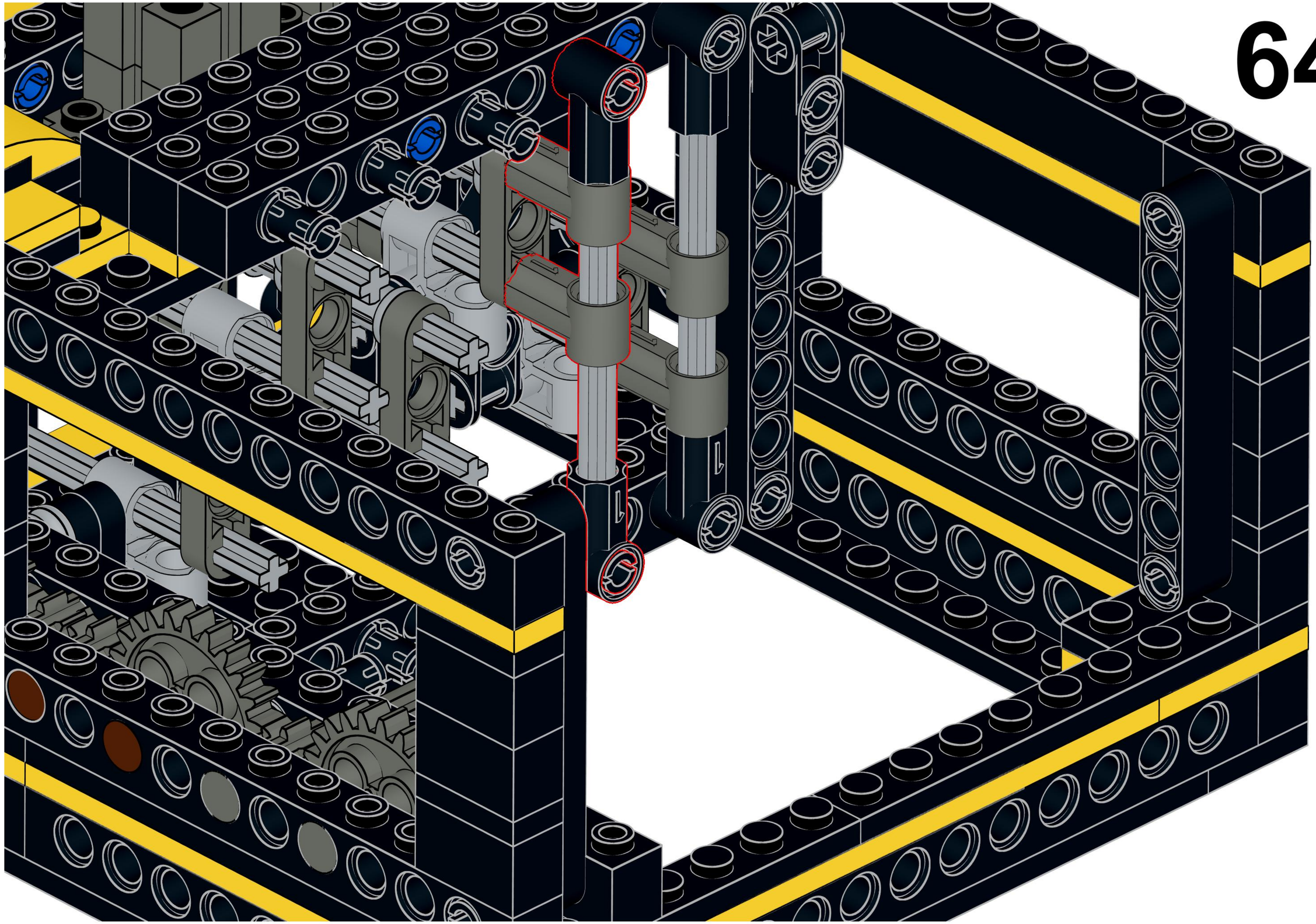

65

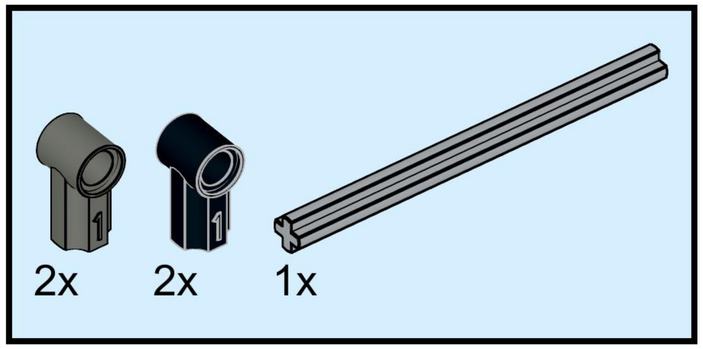

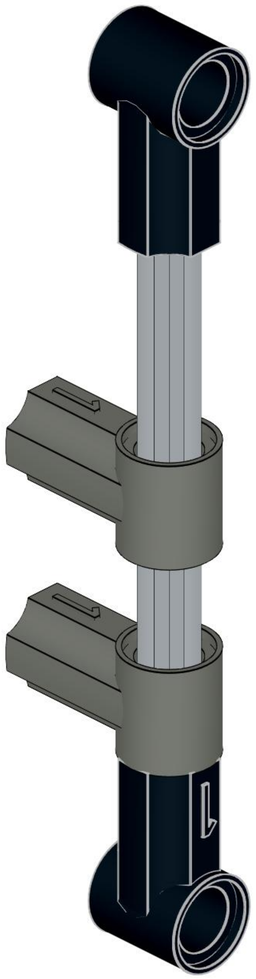

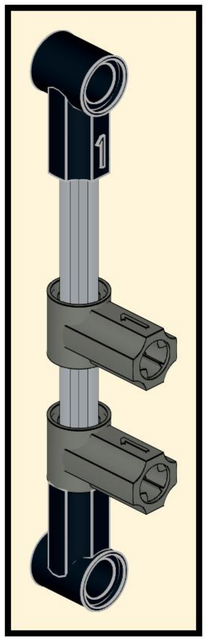

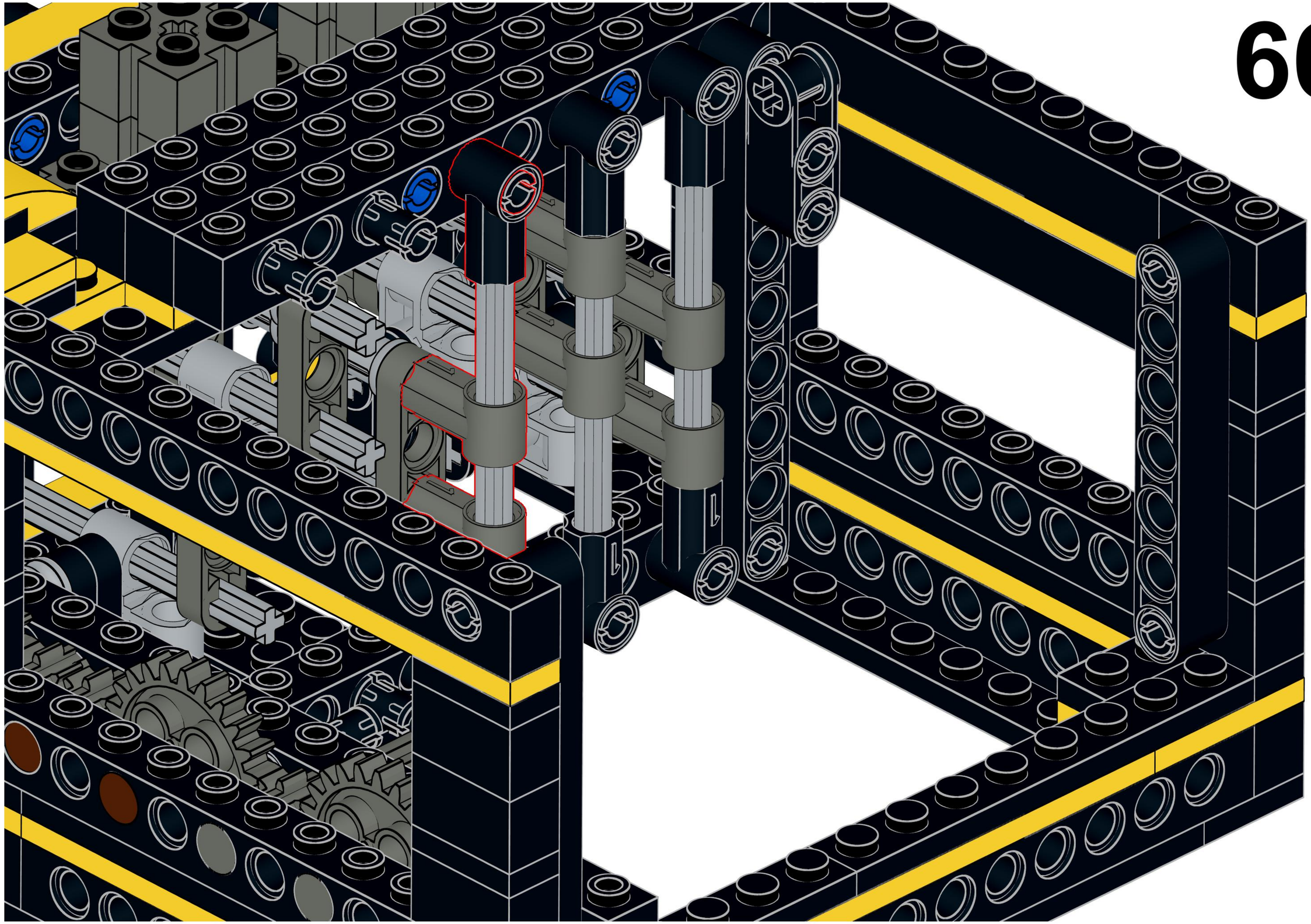

67

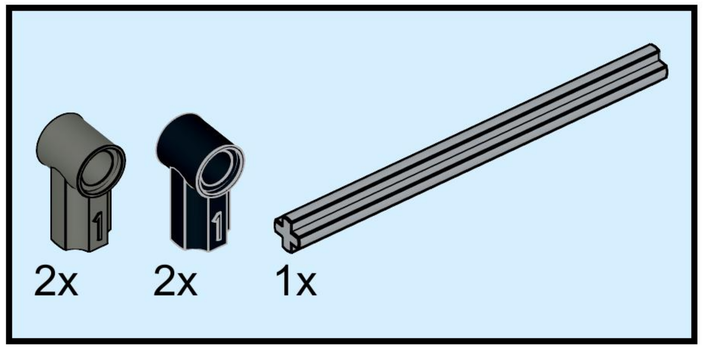

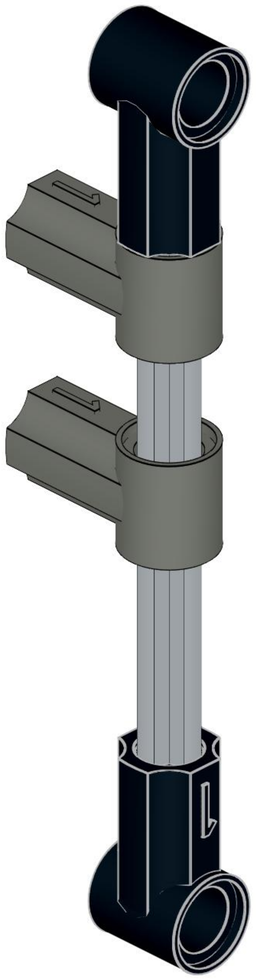

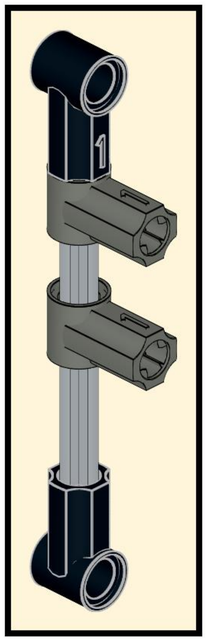

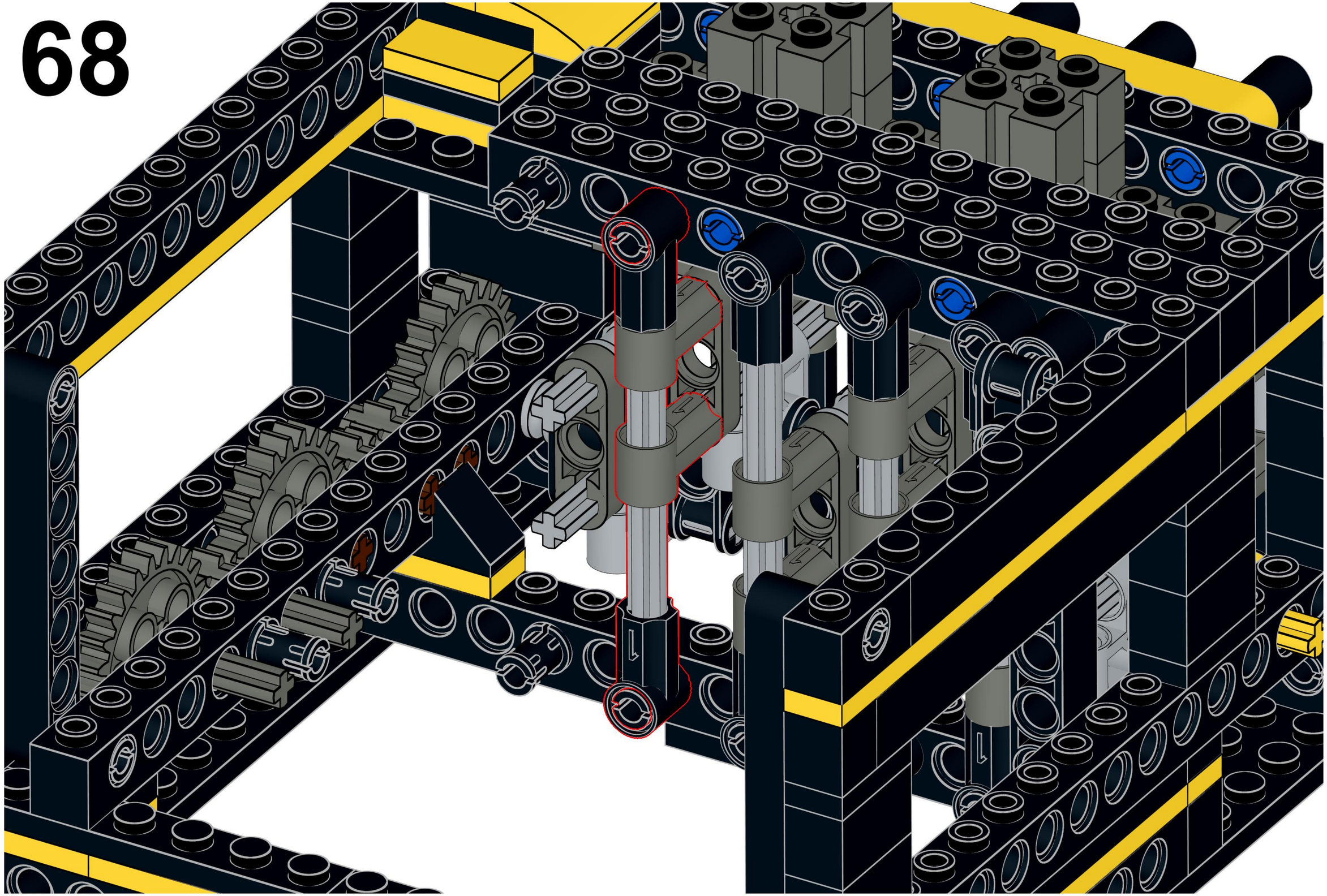

69

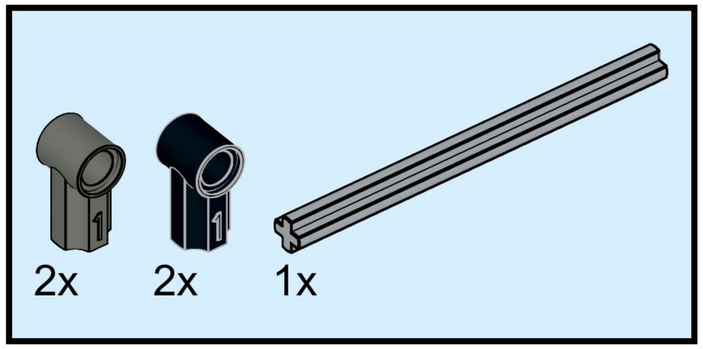

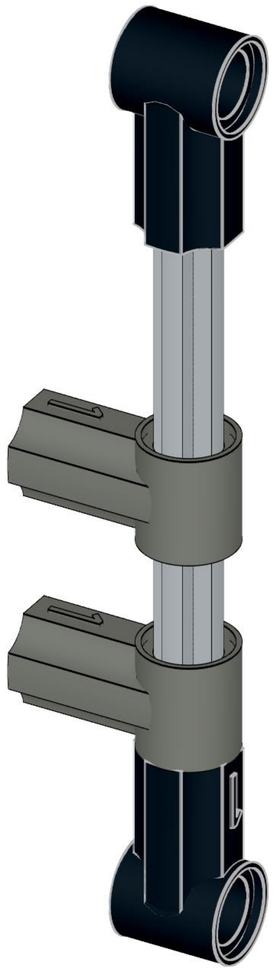

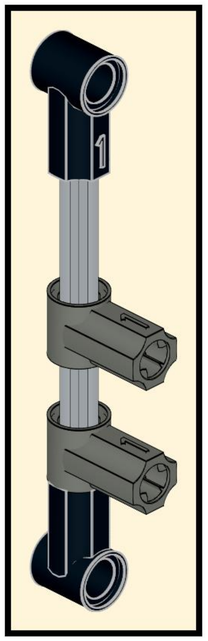

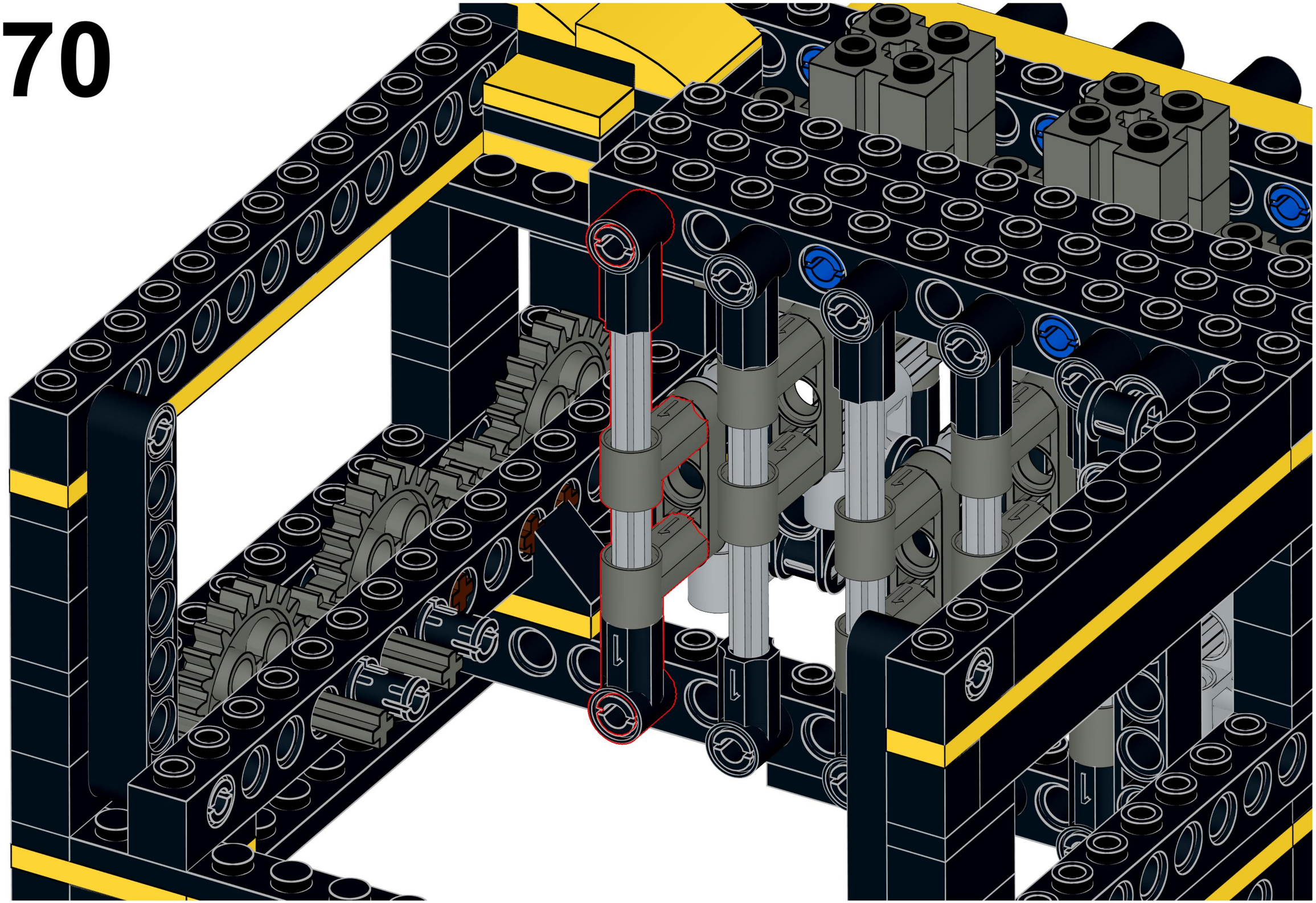

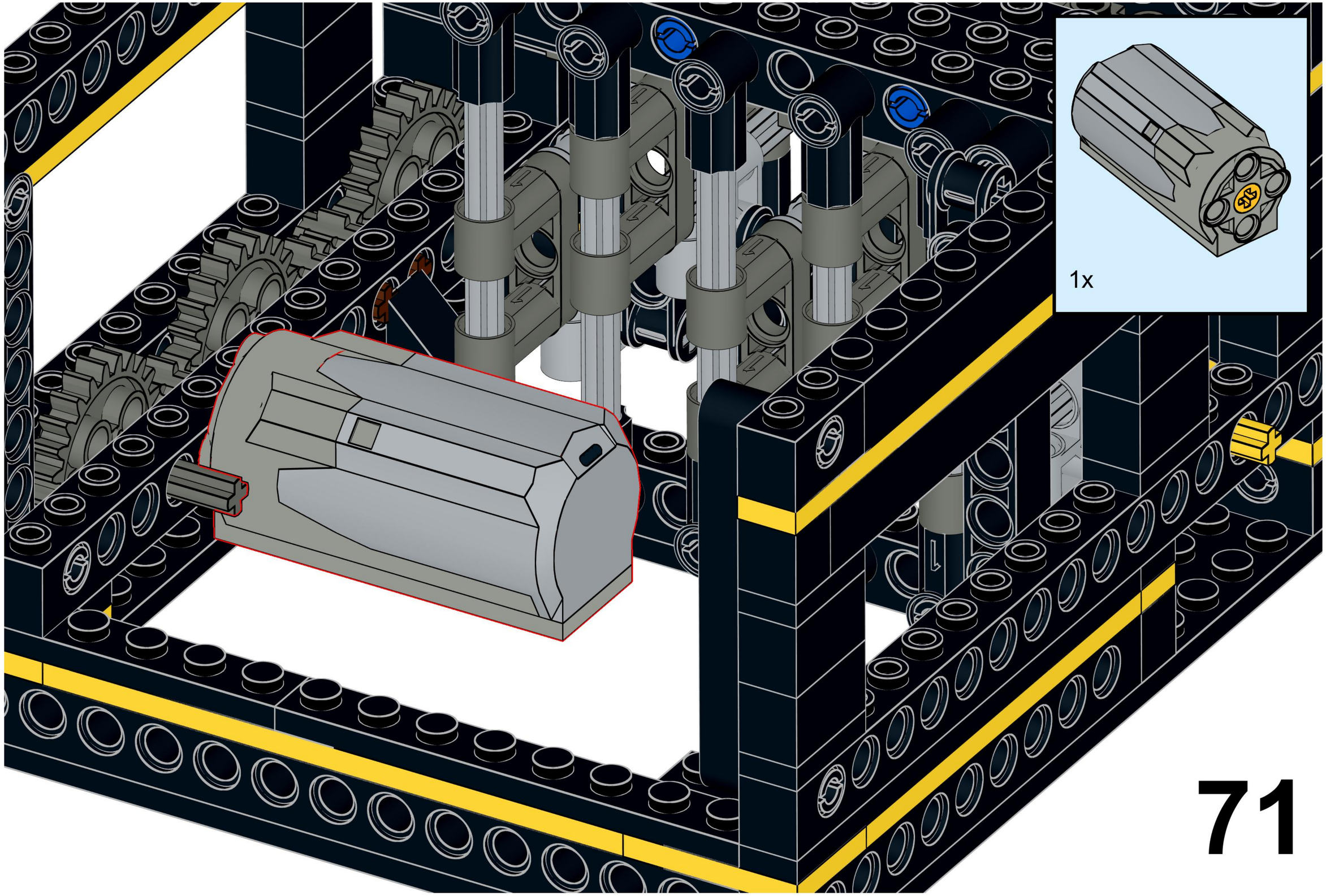
1x

72

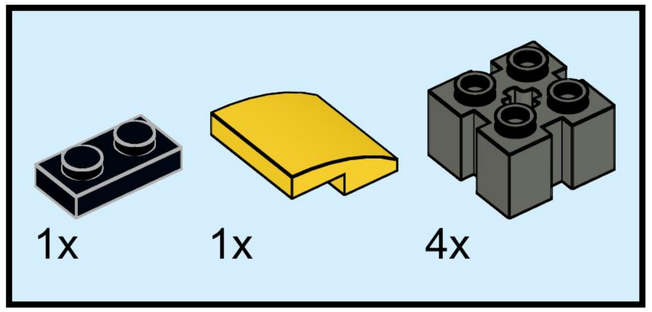

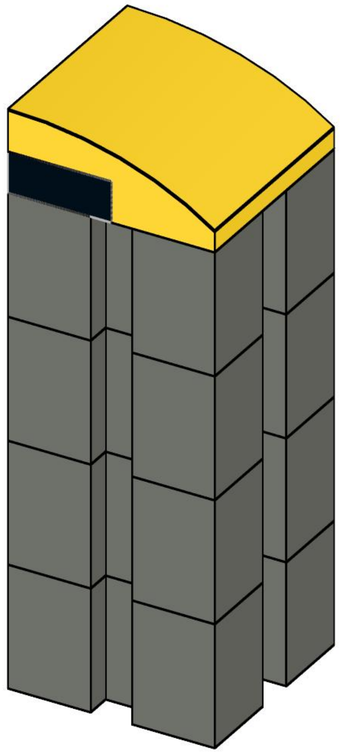

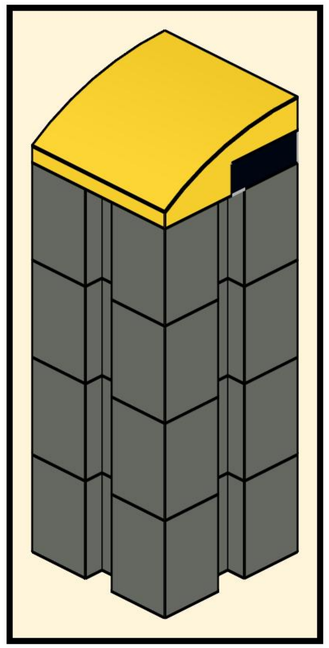

73

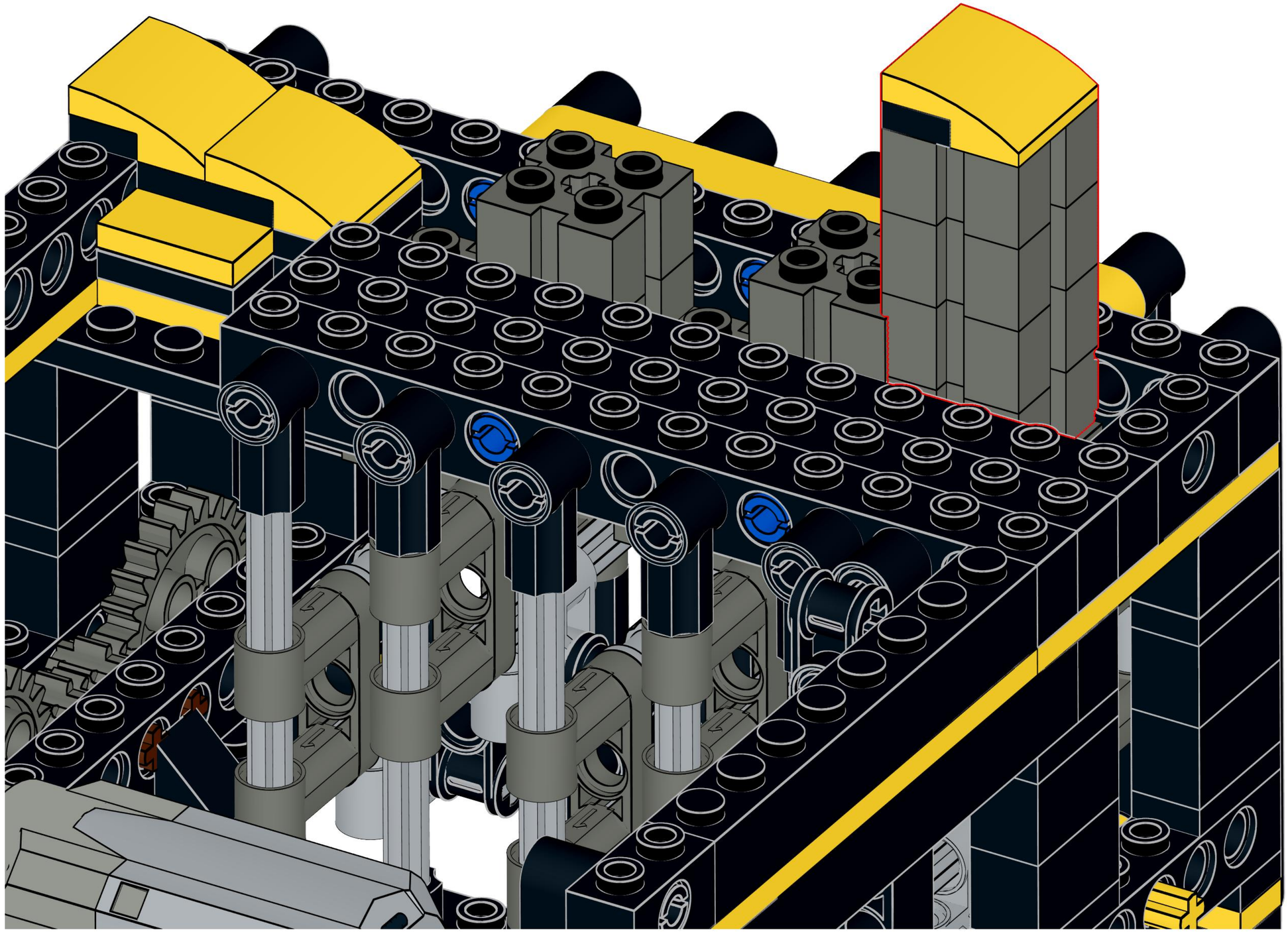

74

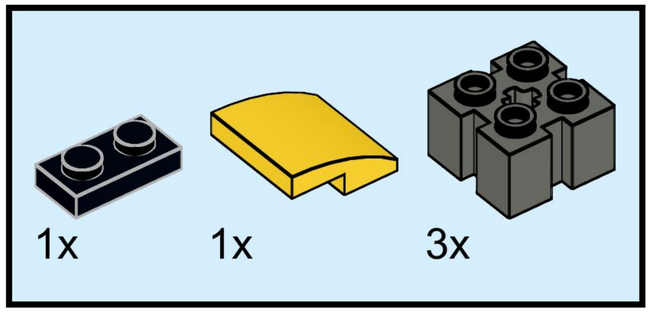

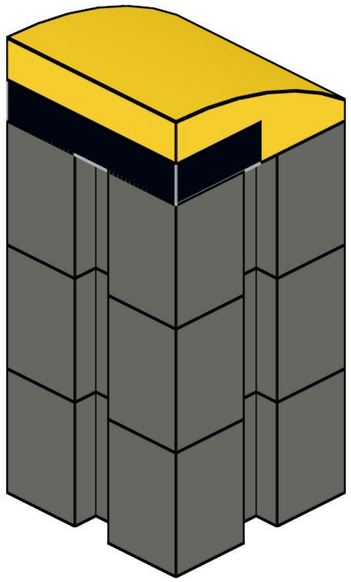

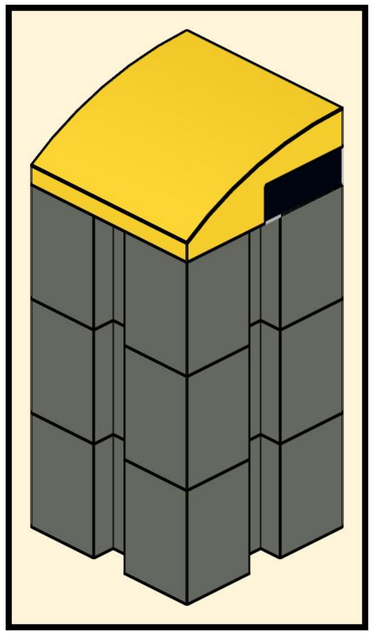

75

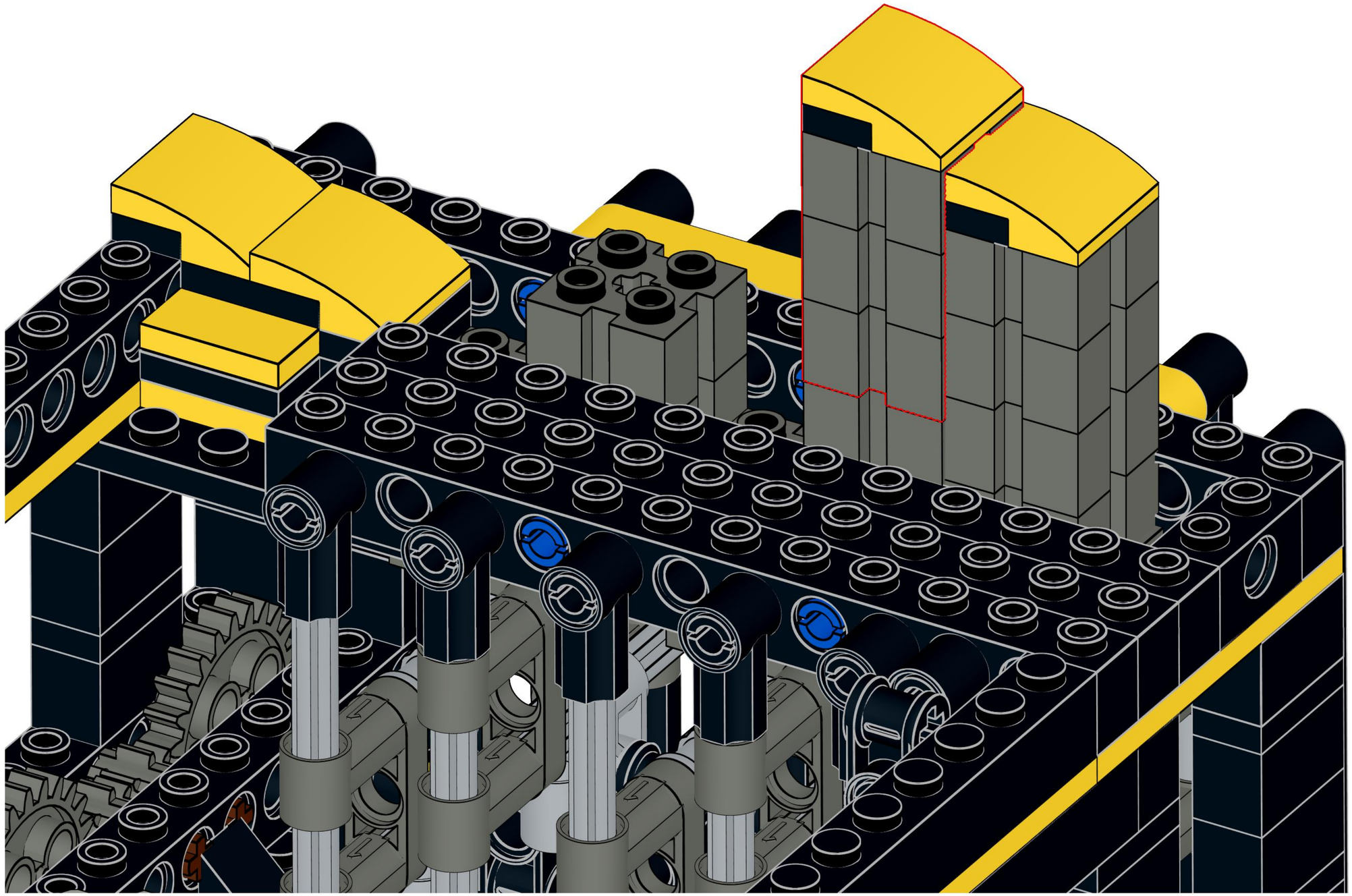

76

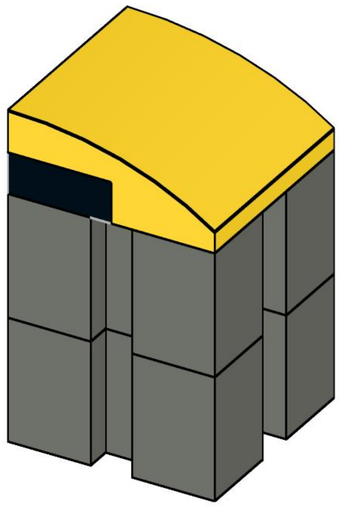

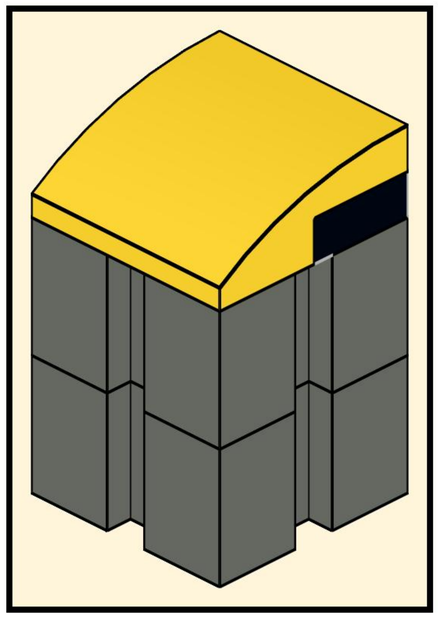

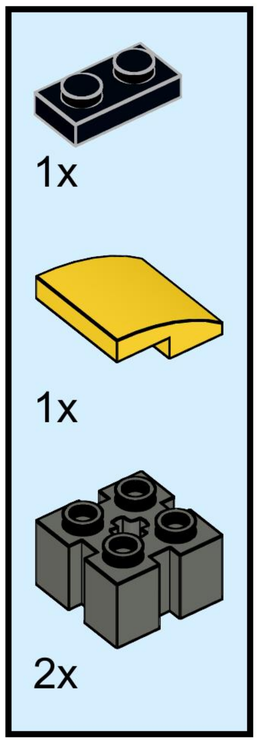

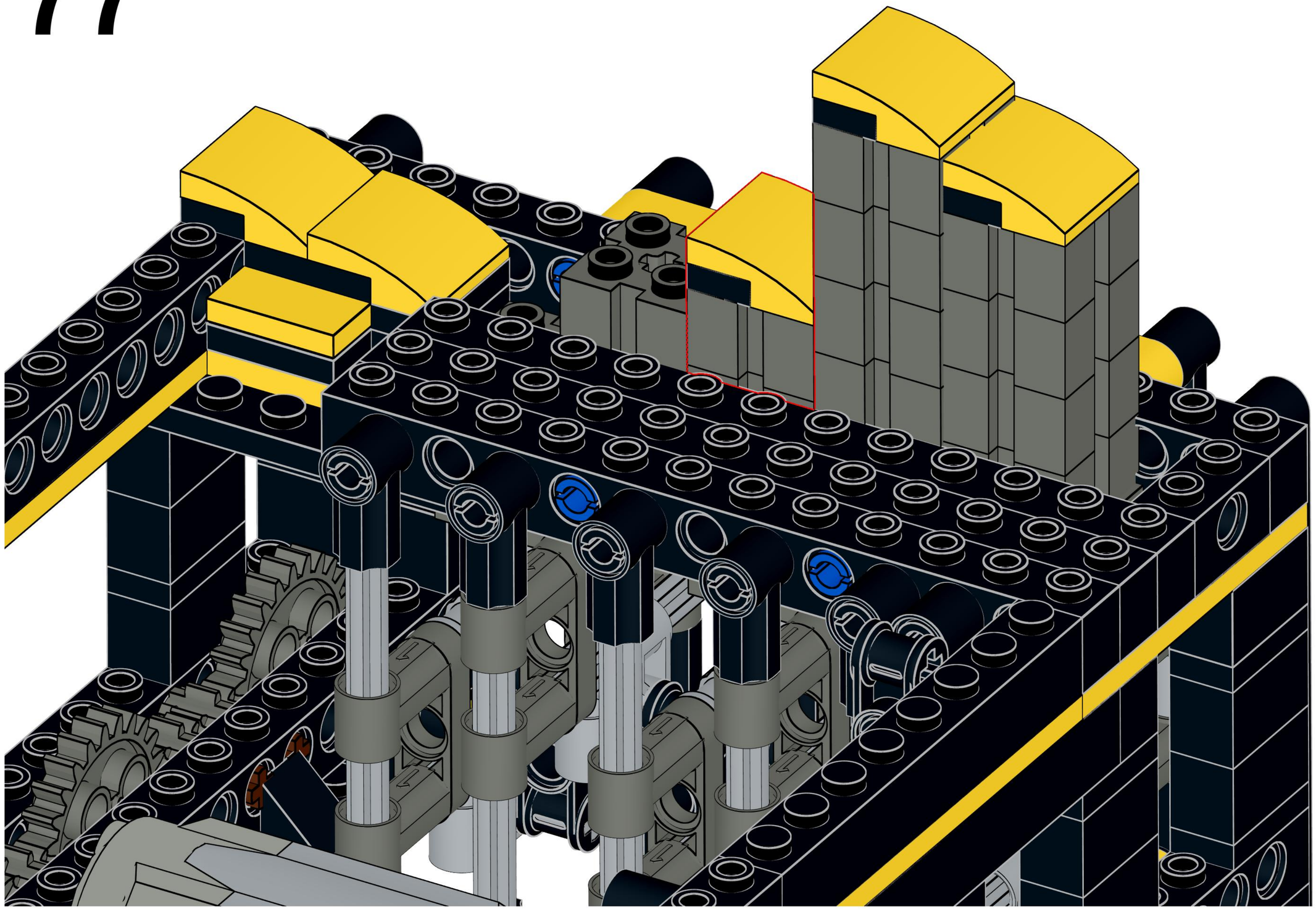

78

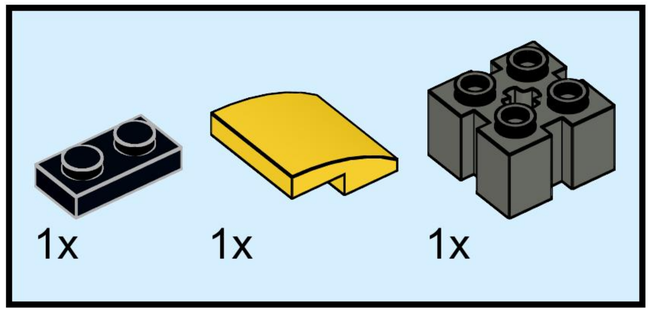

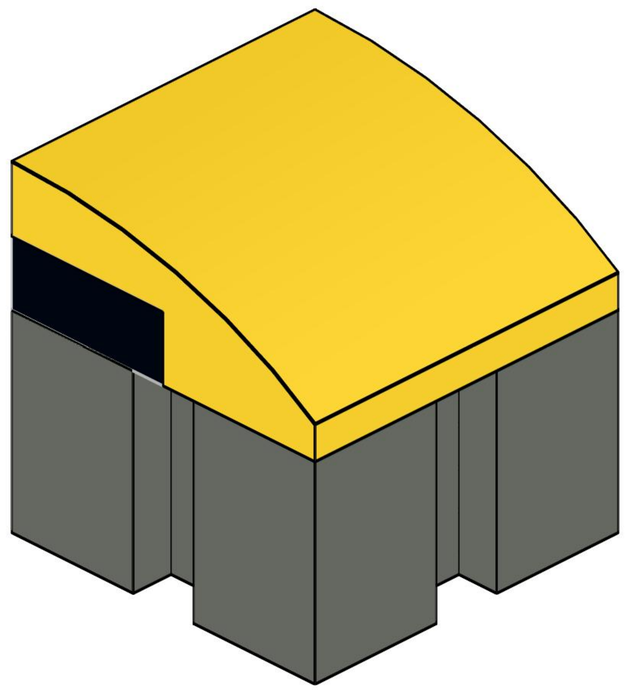

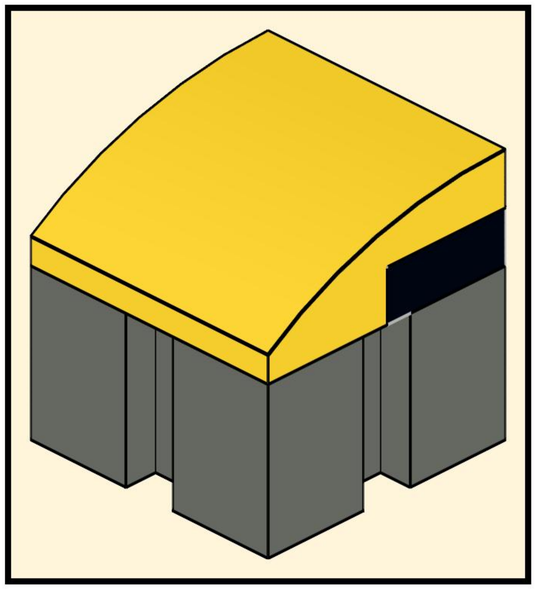

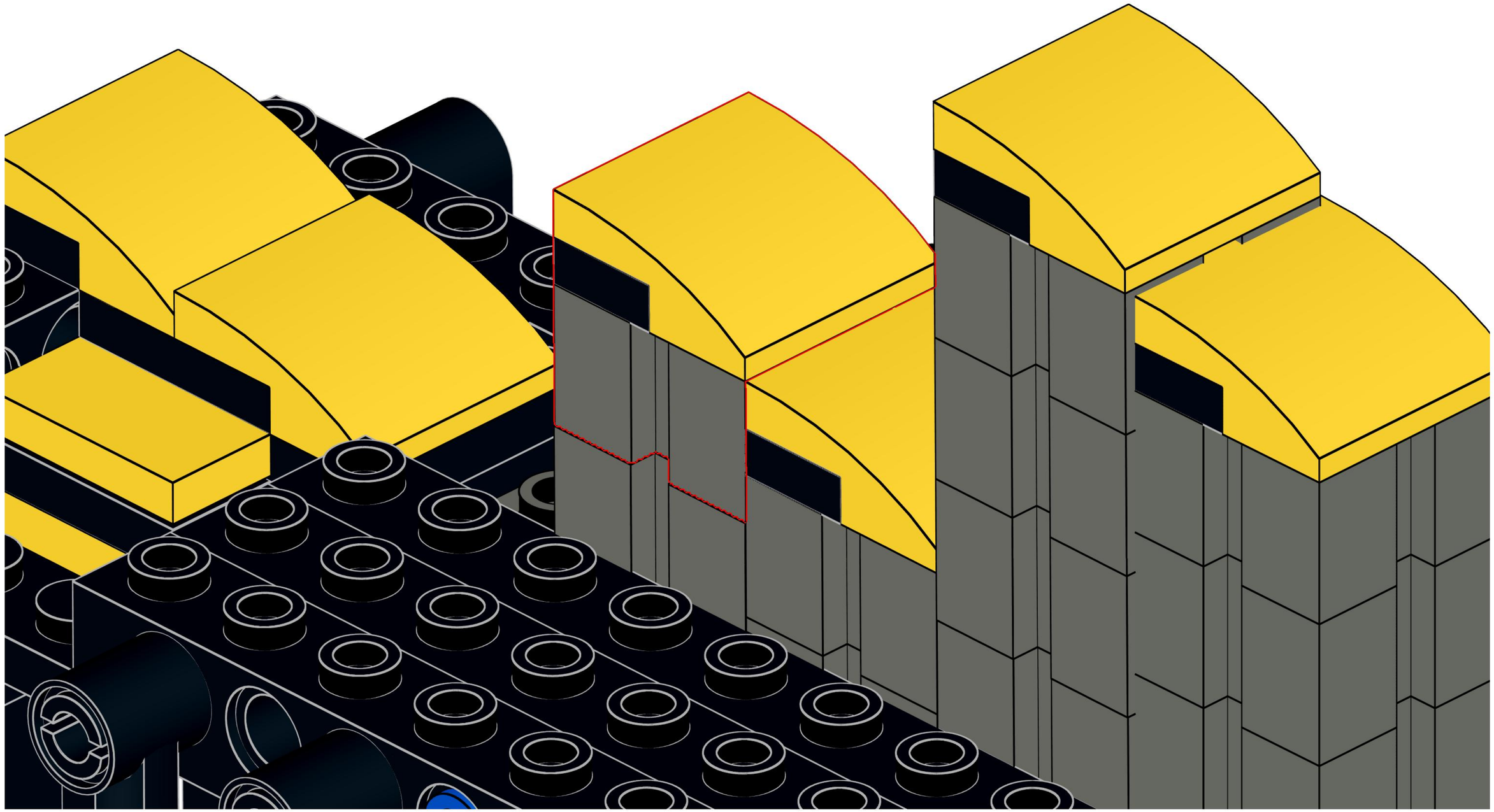

80

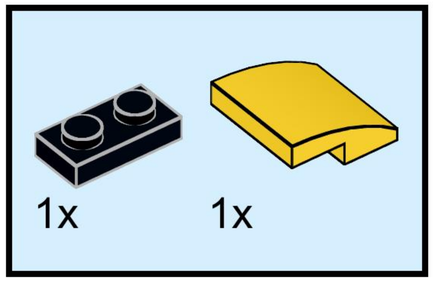

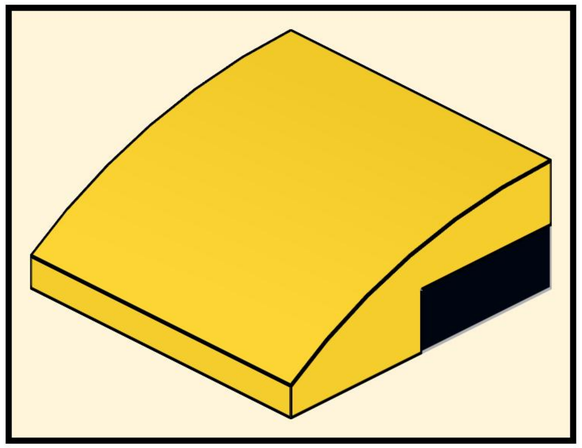

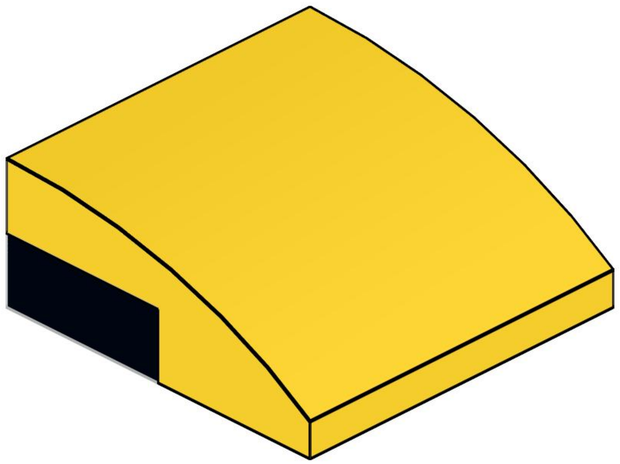

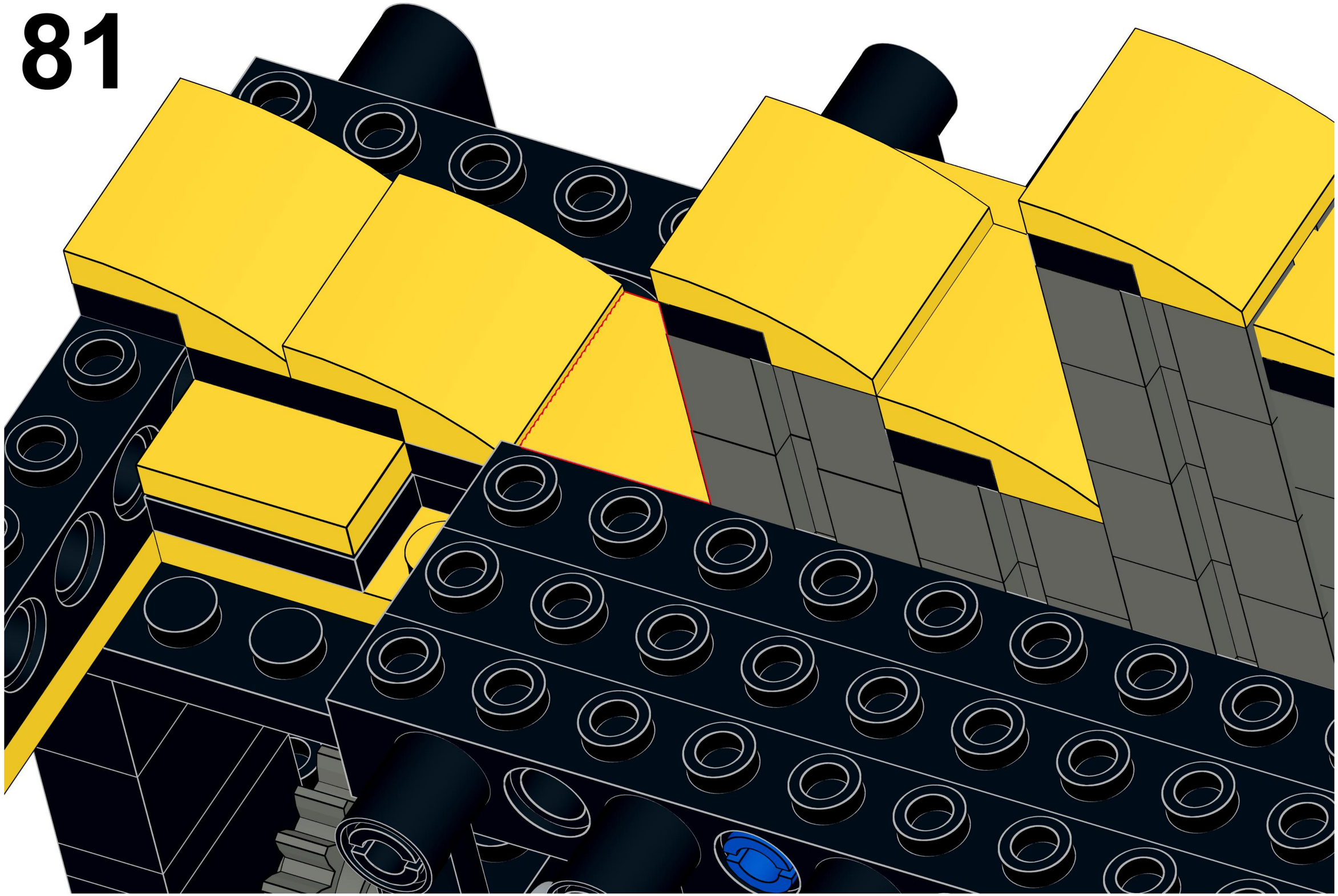

82

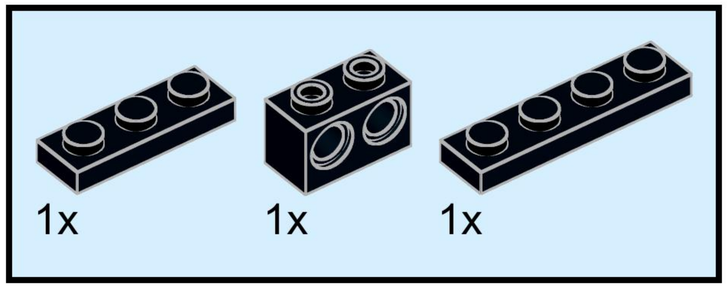

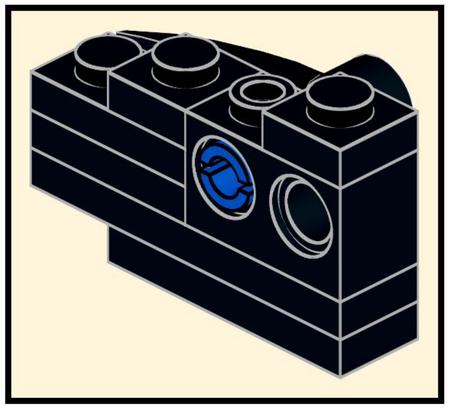

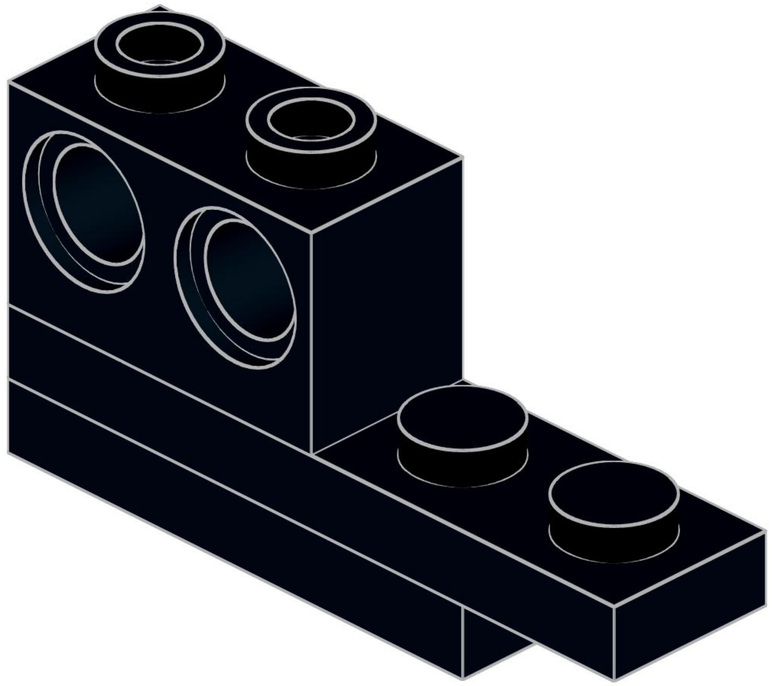

83

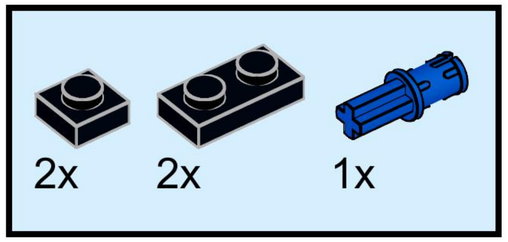

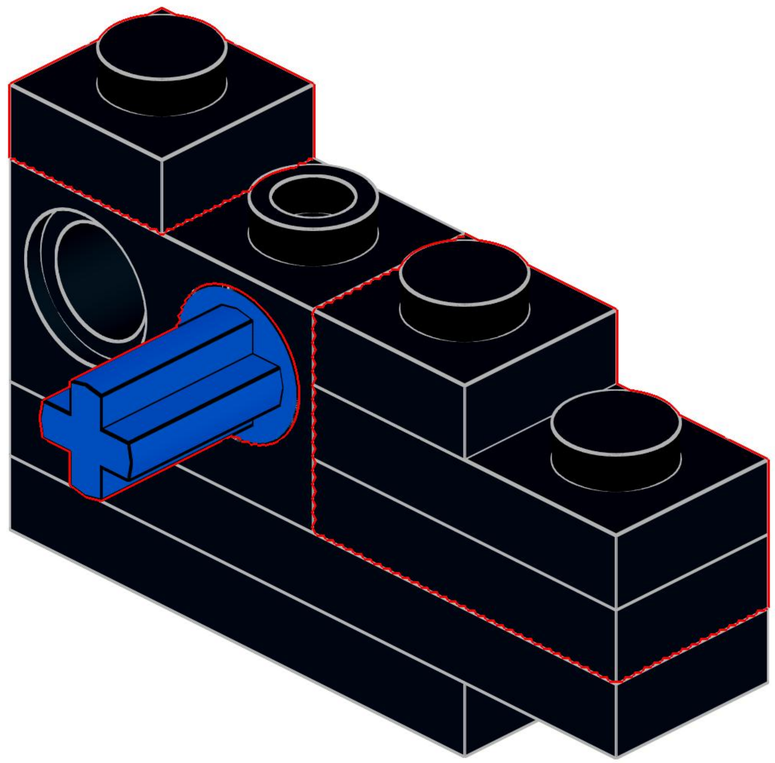

84

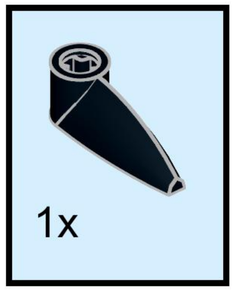

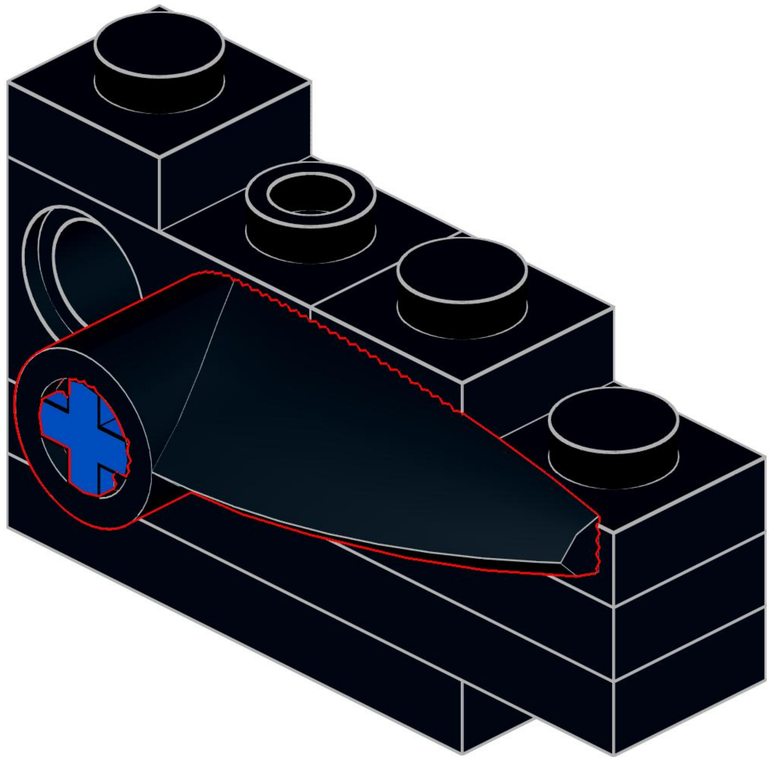

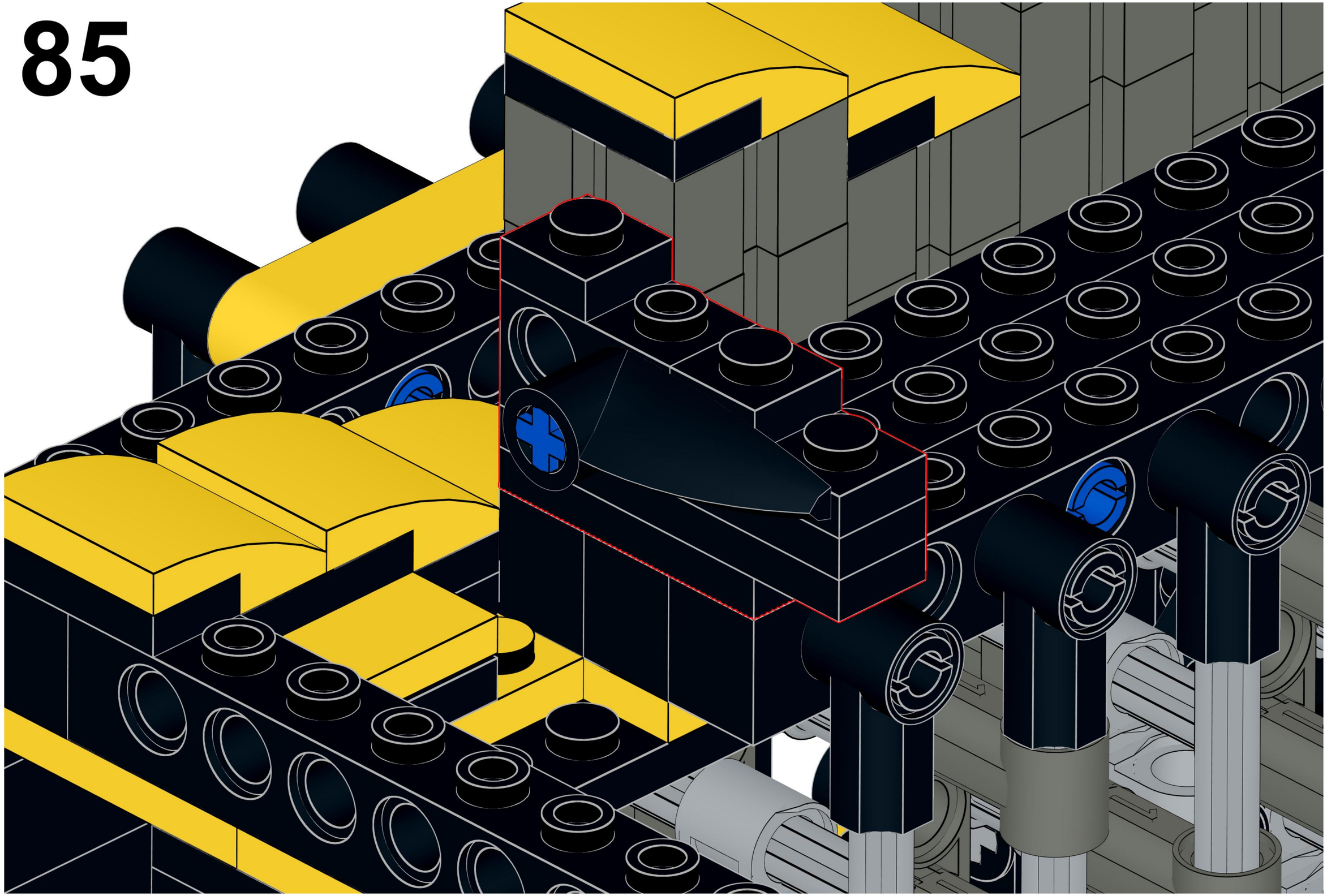

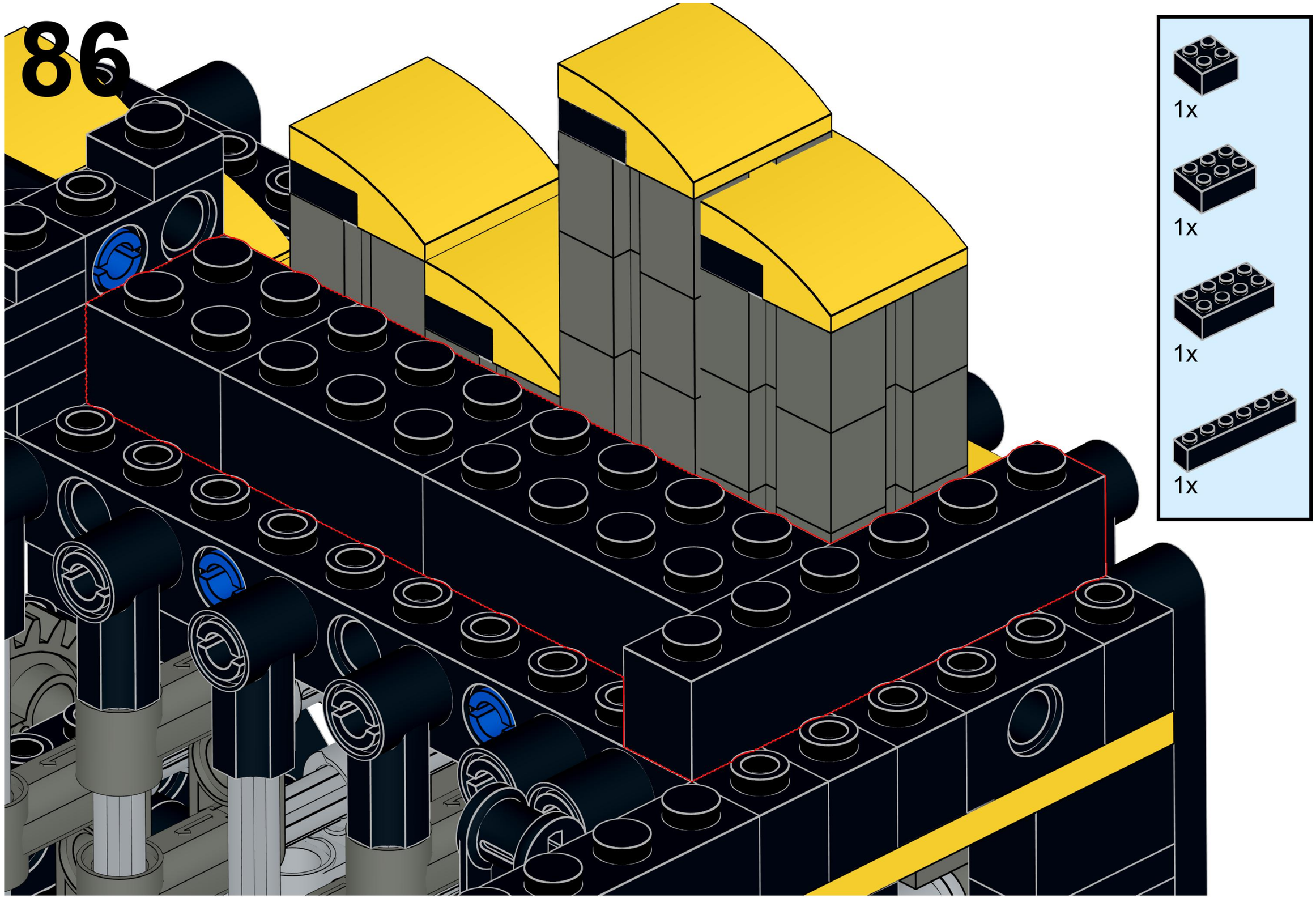
1x
1x
1x
1x

87

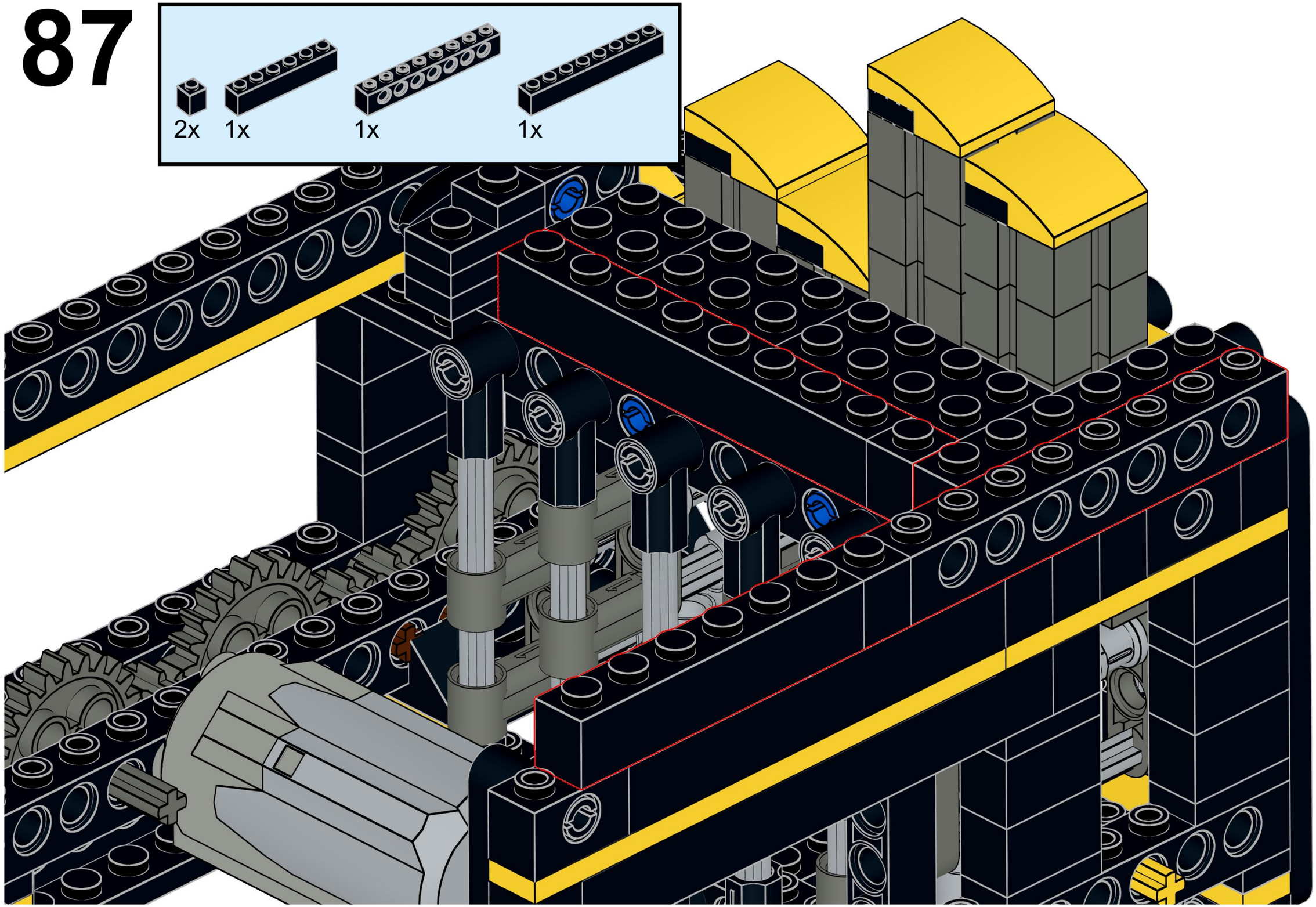

88

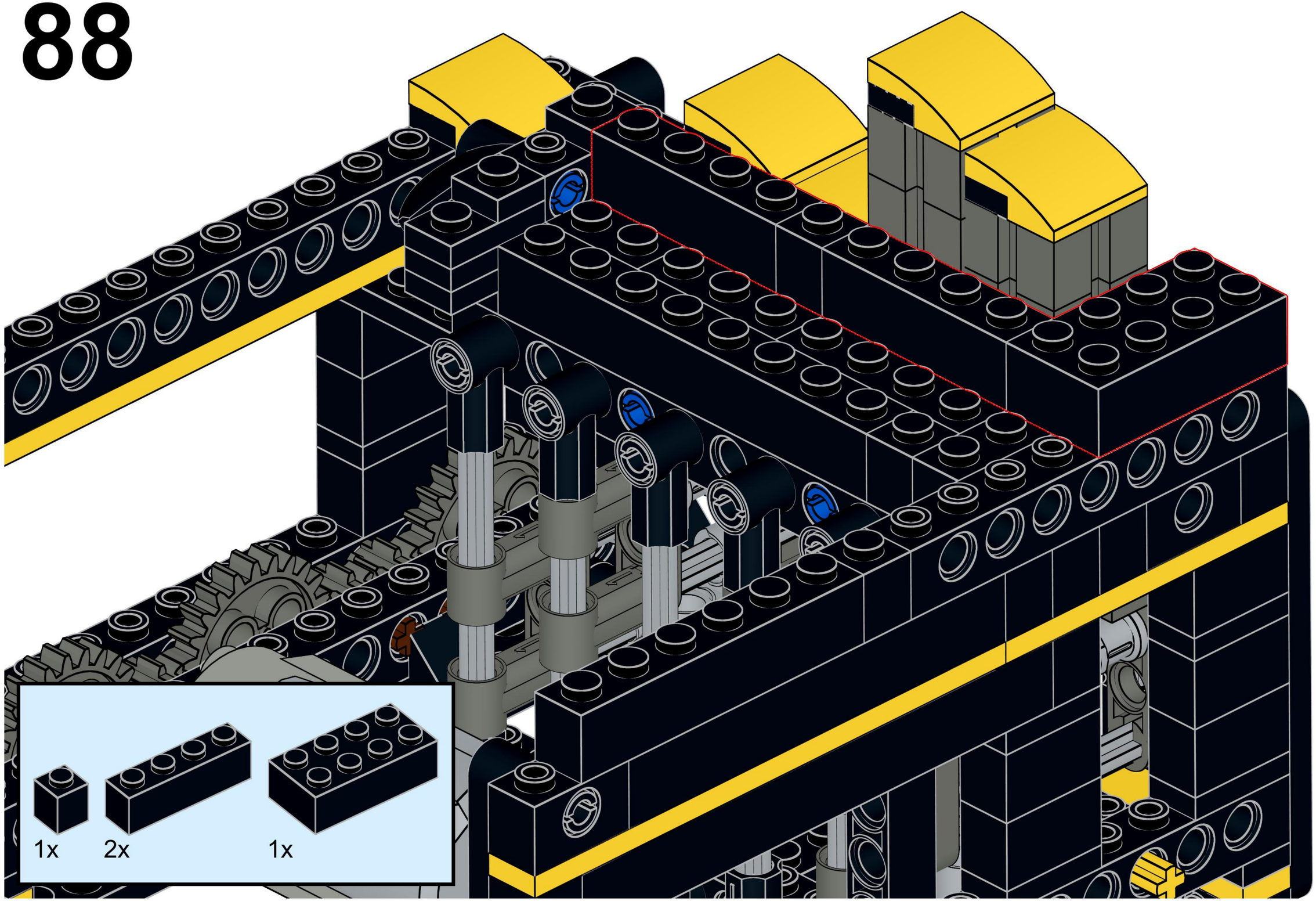

89

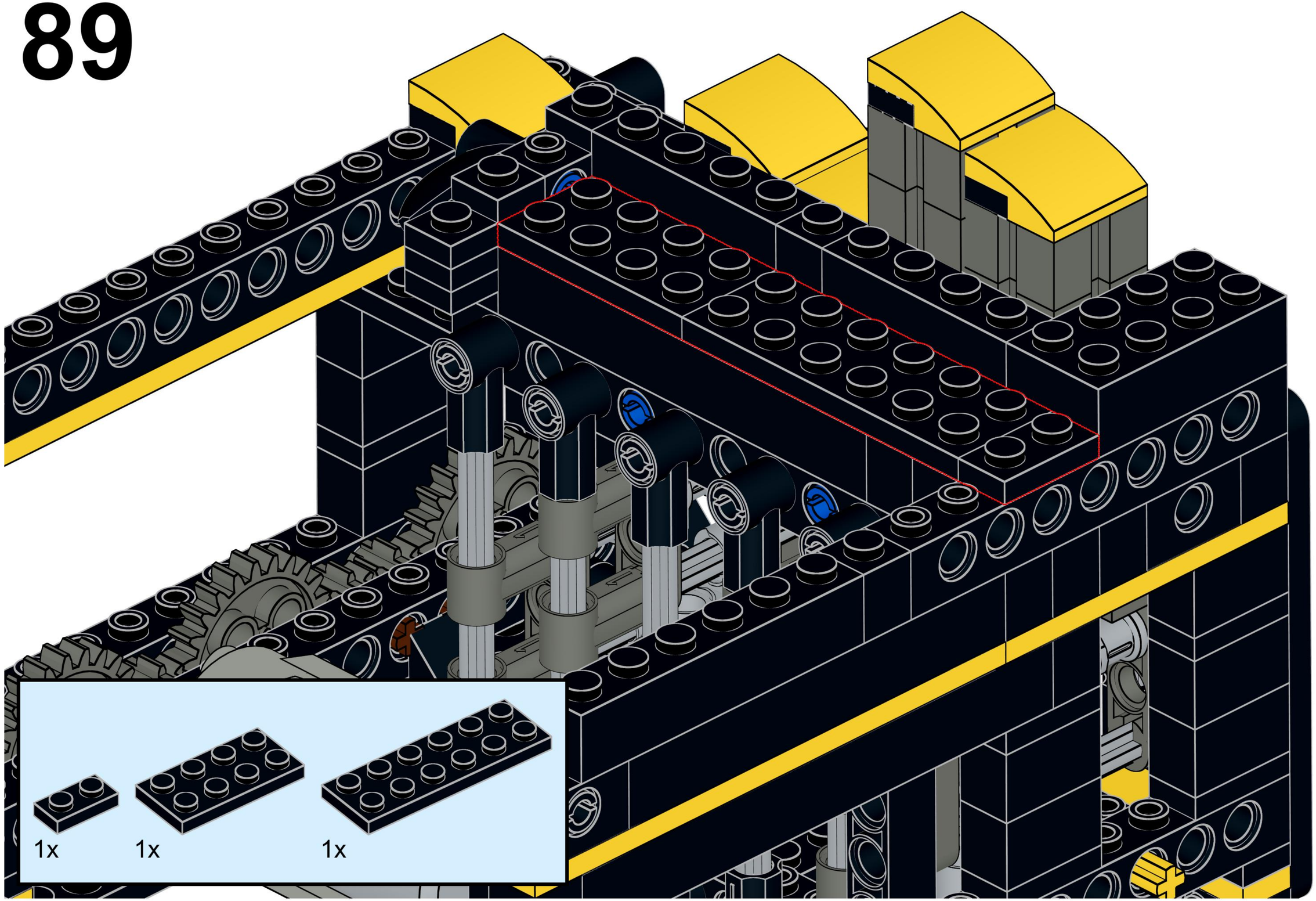

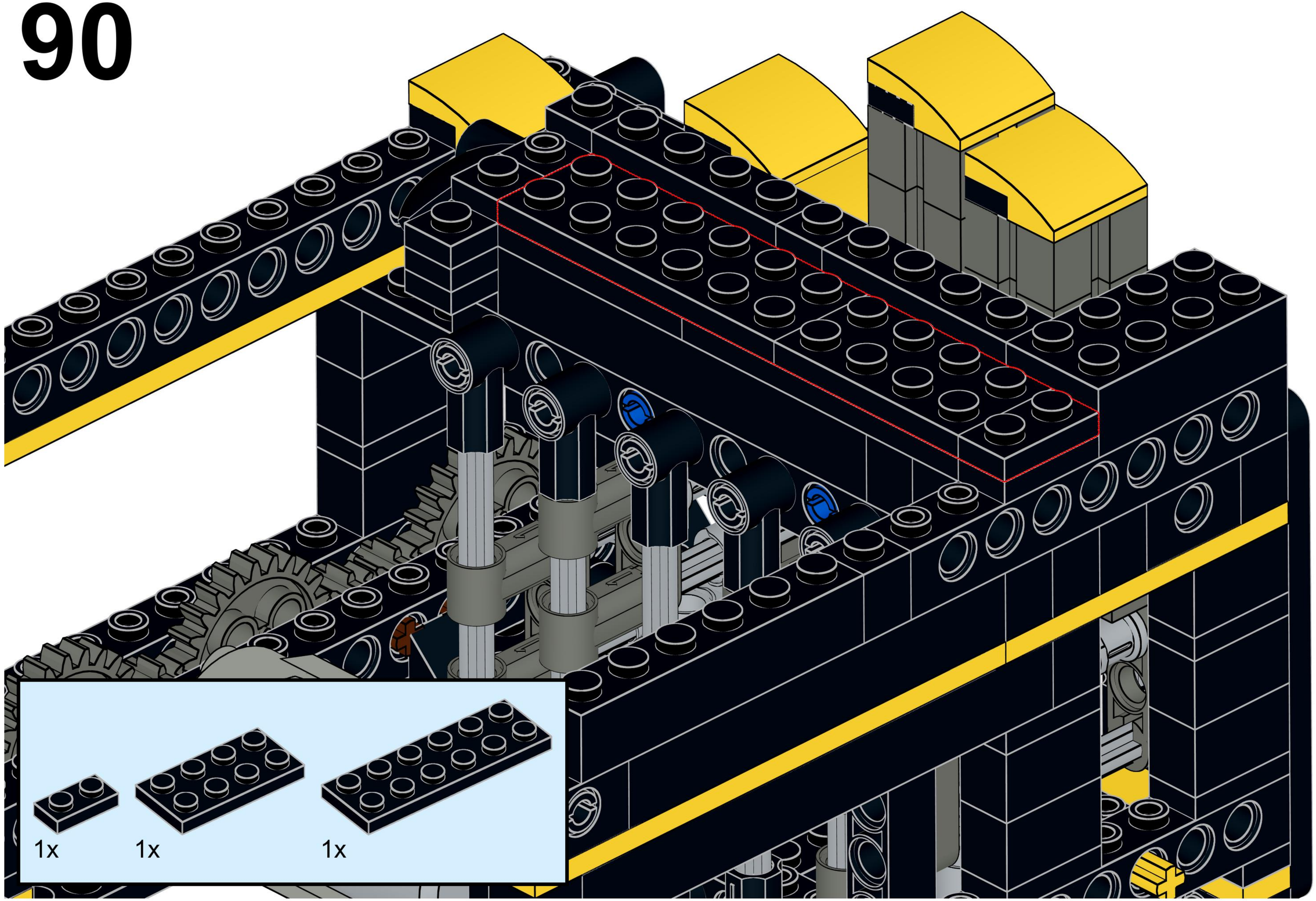
1x
1x
1x

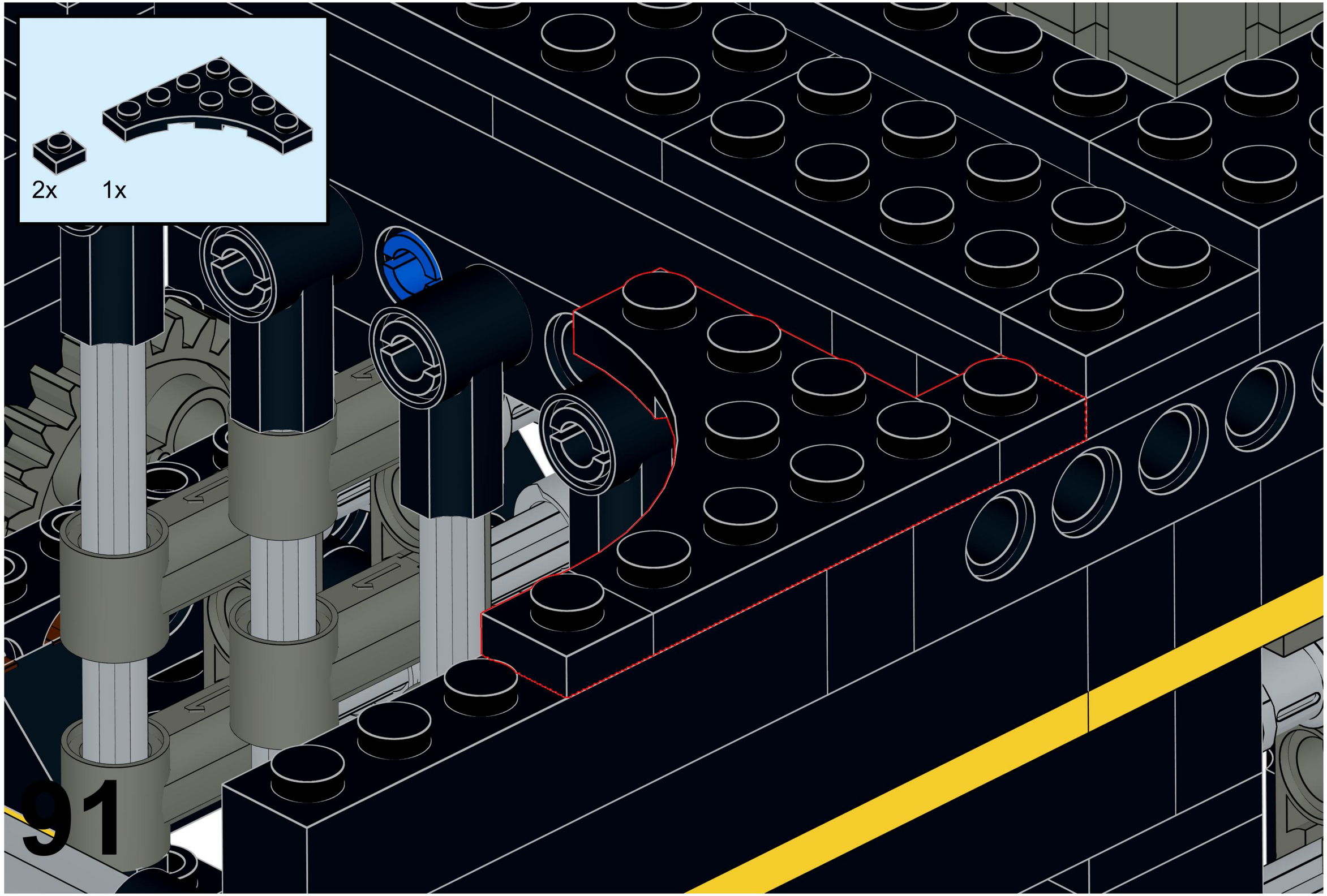
2x
1x
91

92

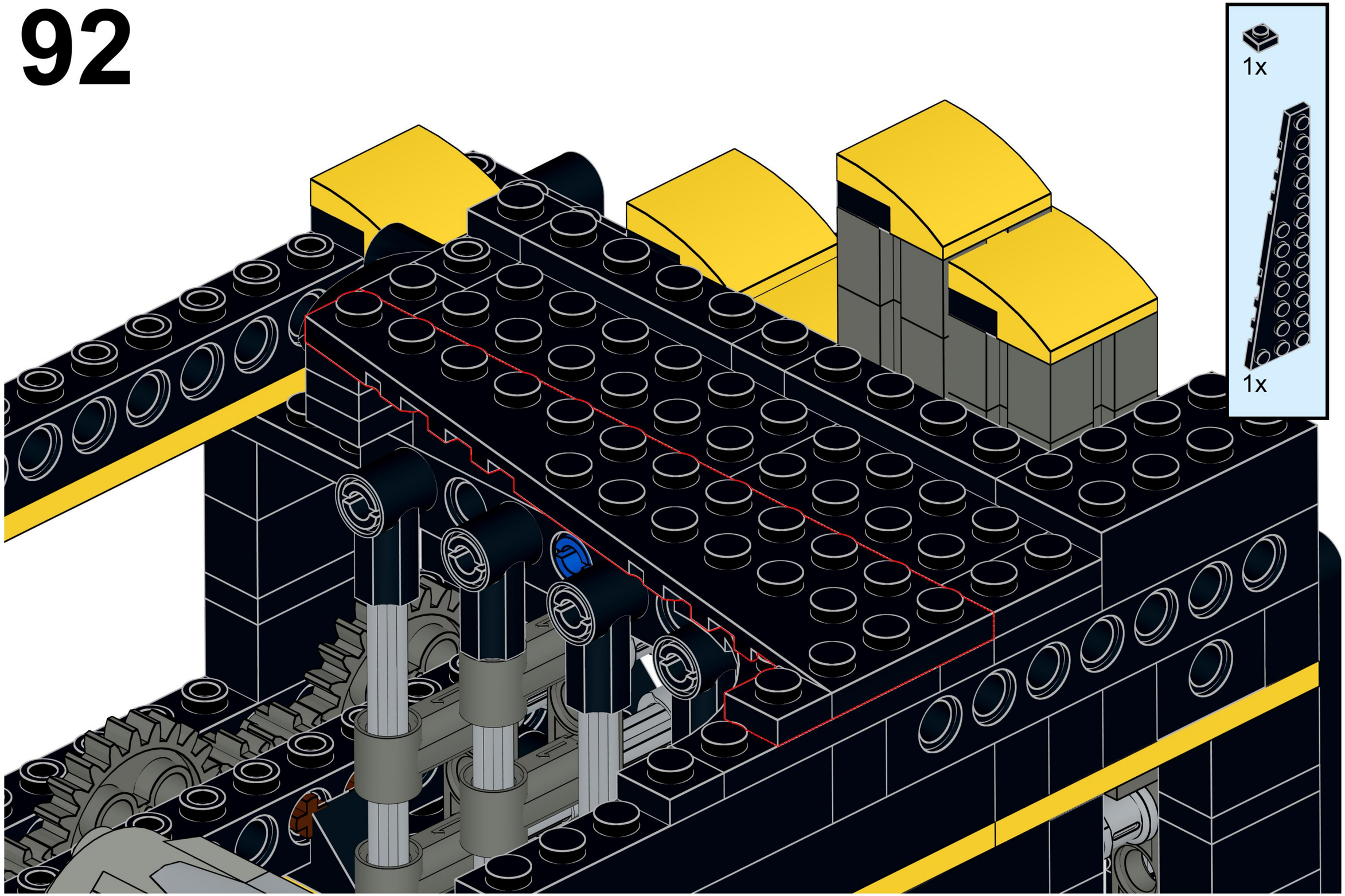

93

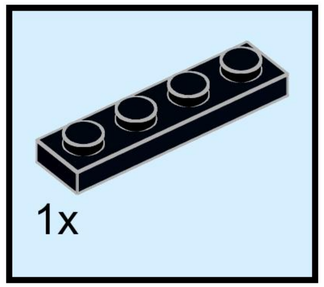

94

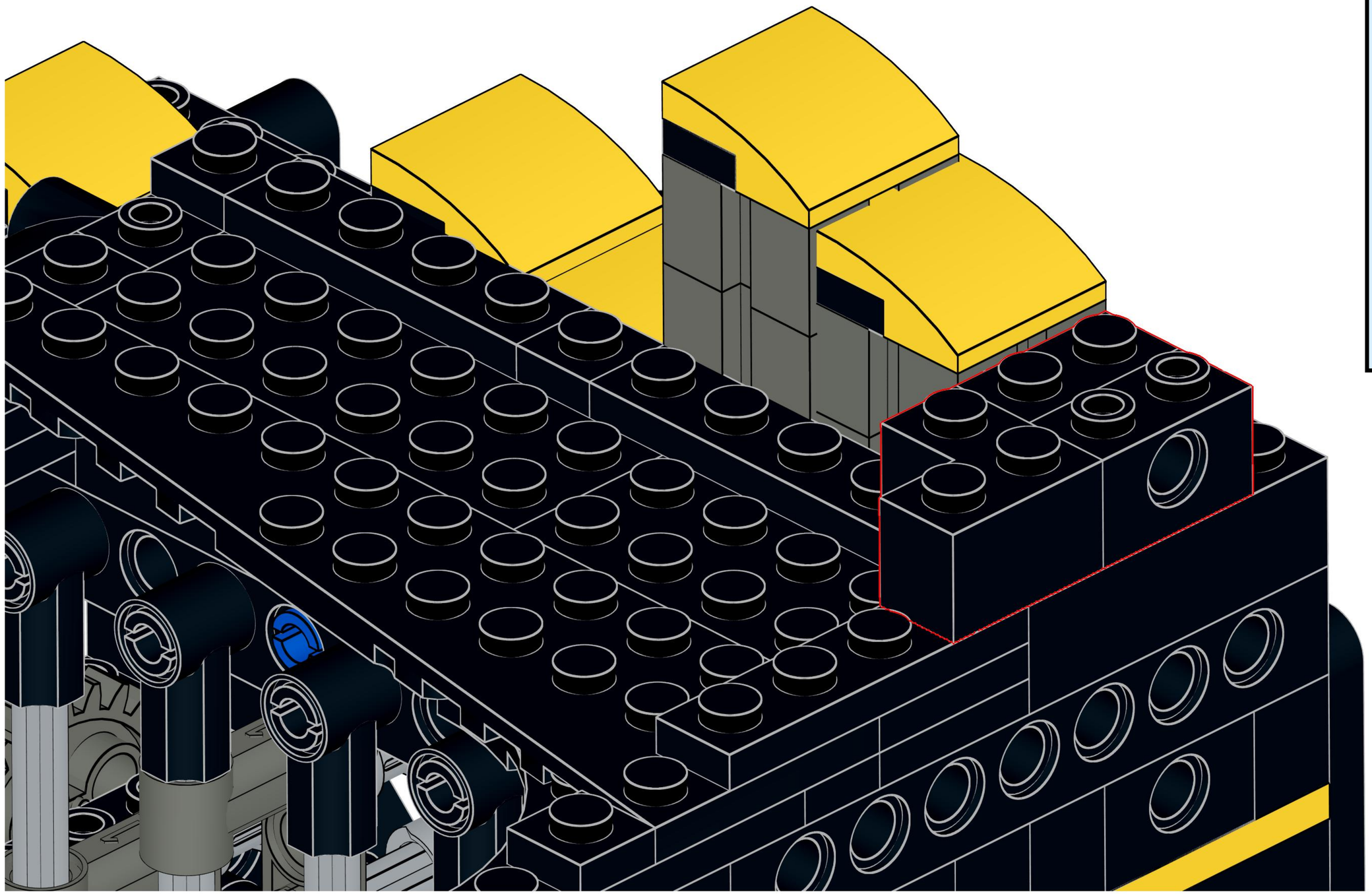

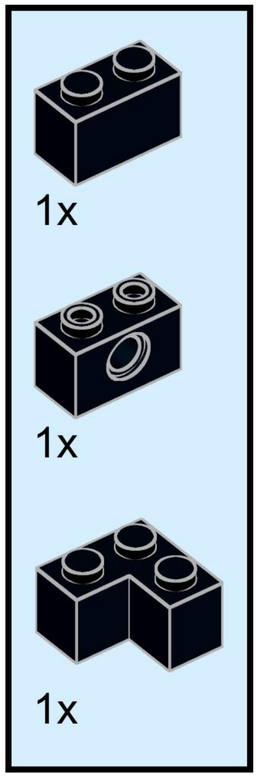

95

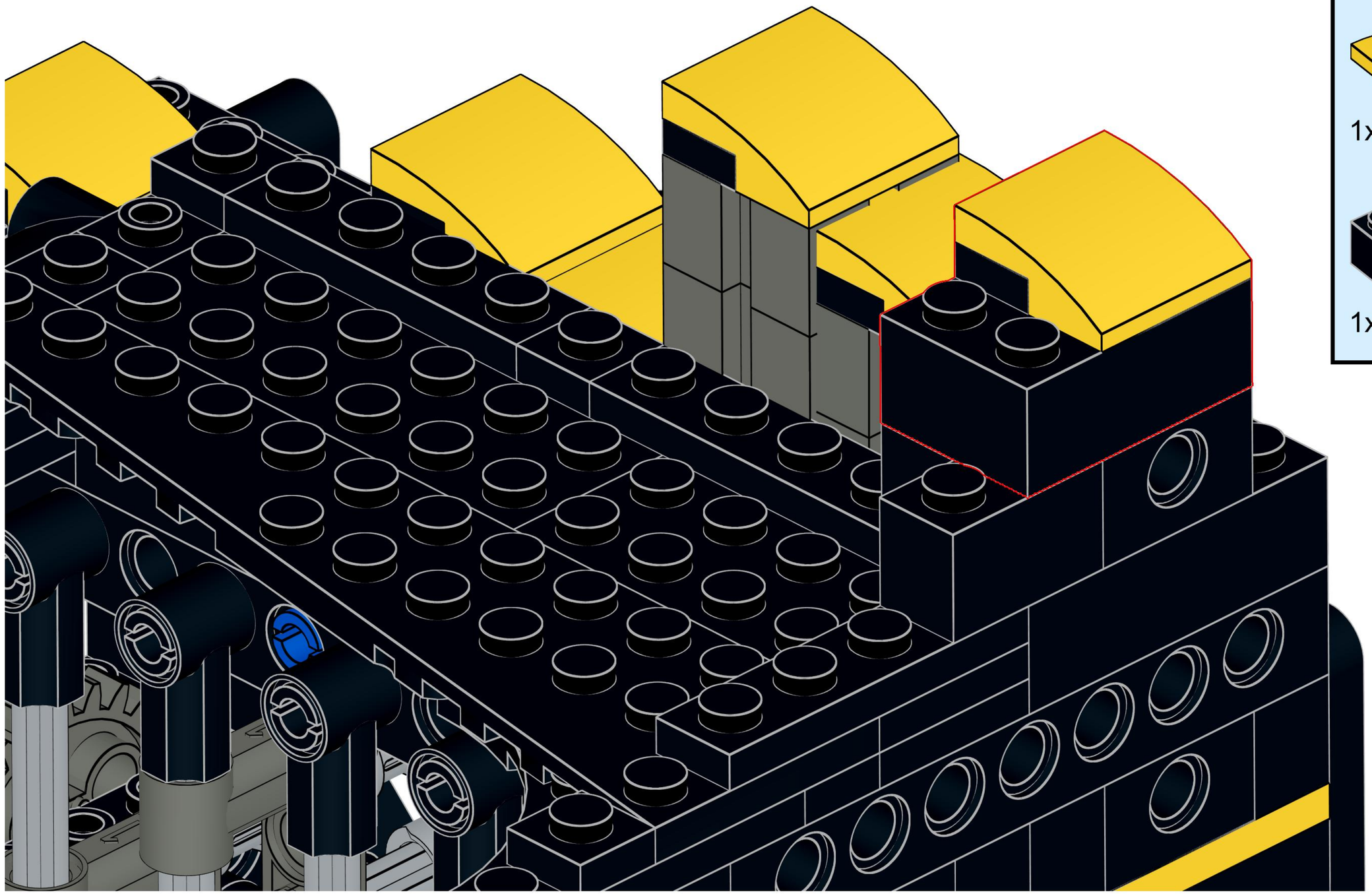

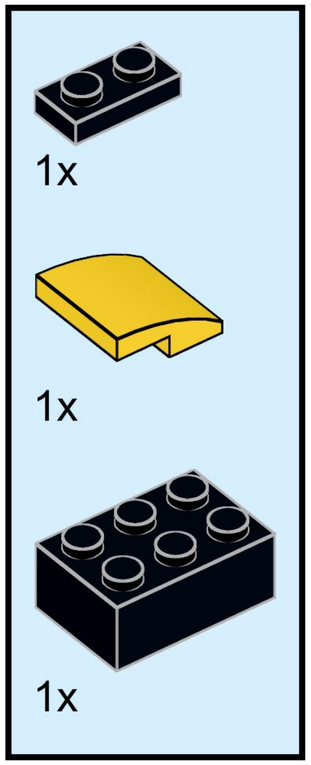

96

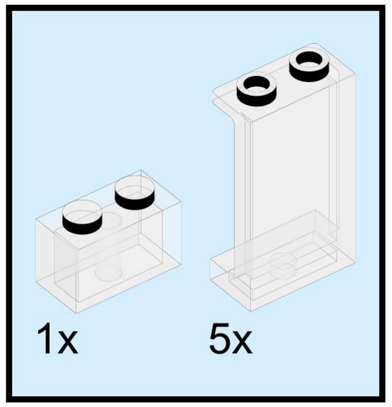

Transparent panels are 3 bricks high.

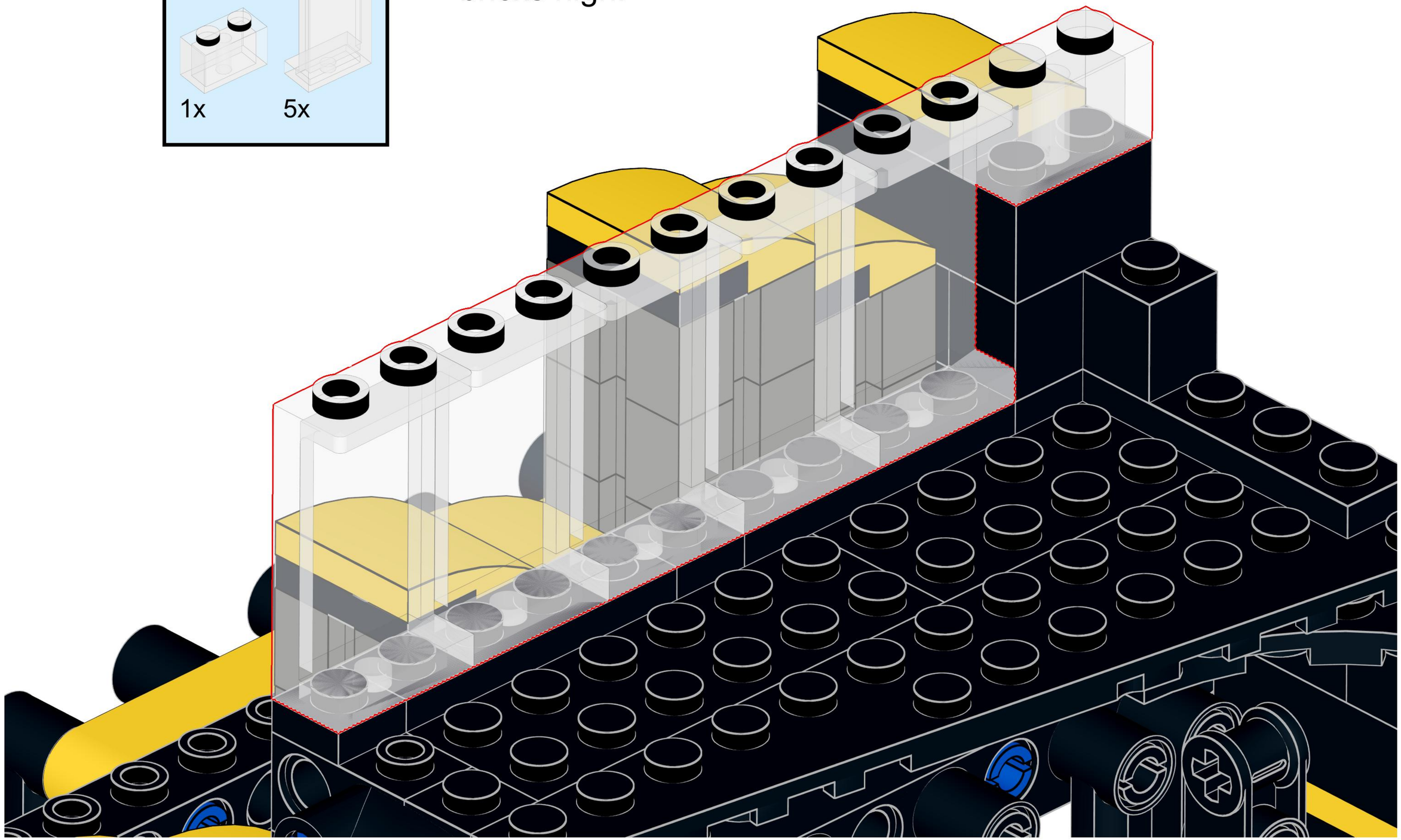

97

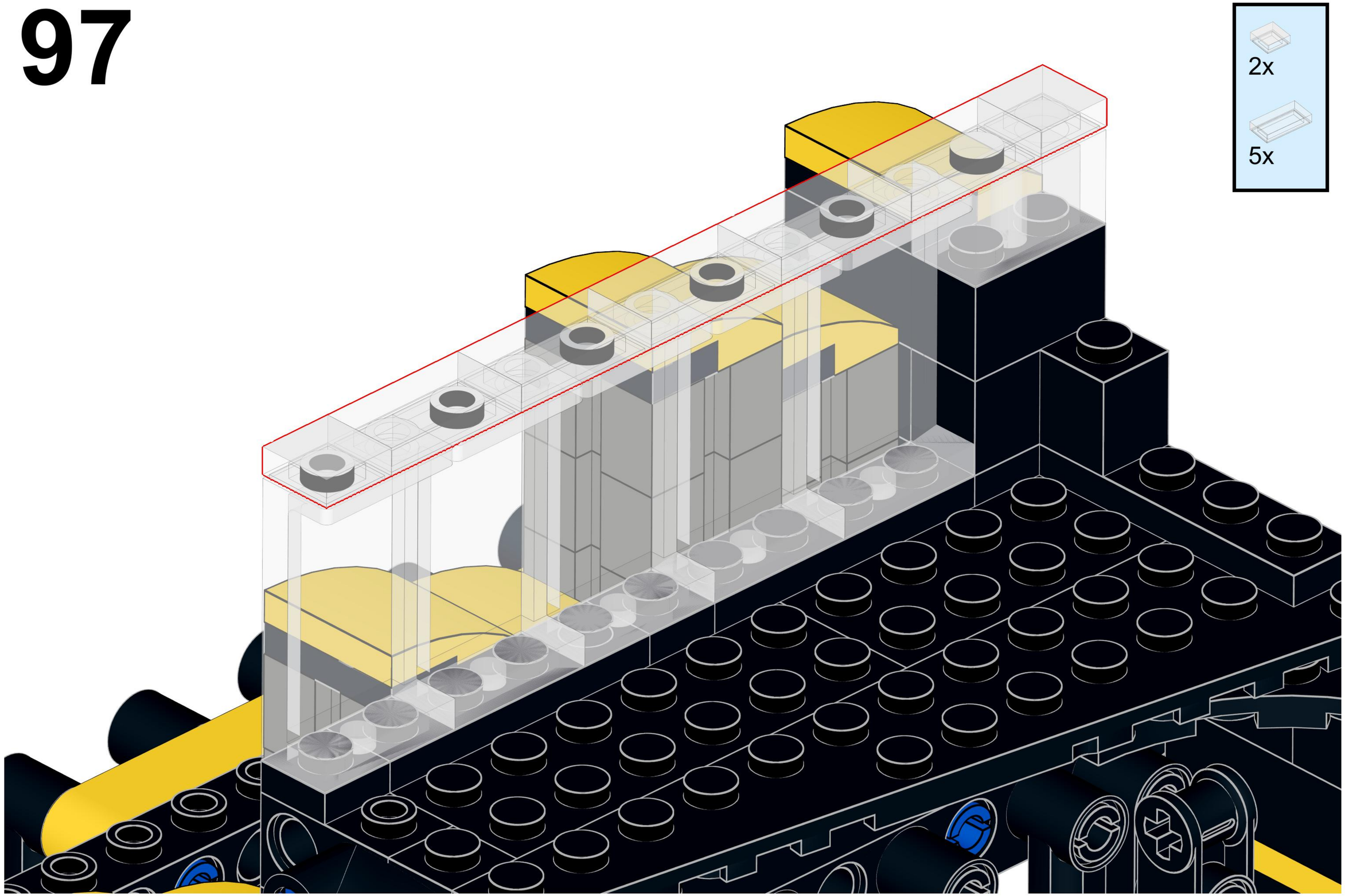

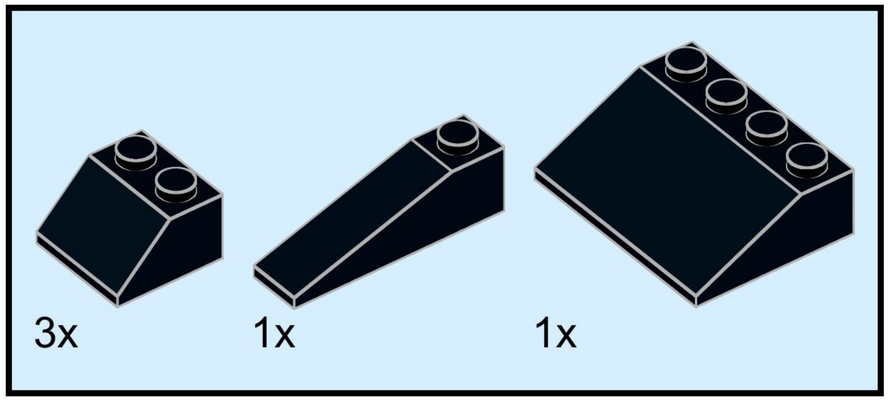
3x
1x
1x

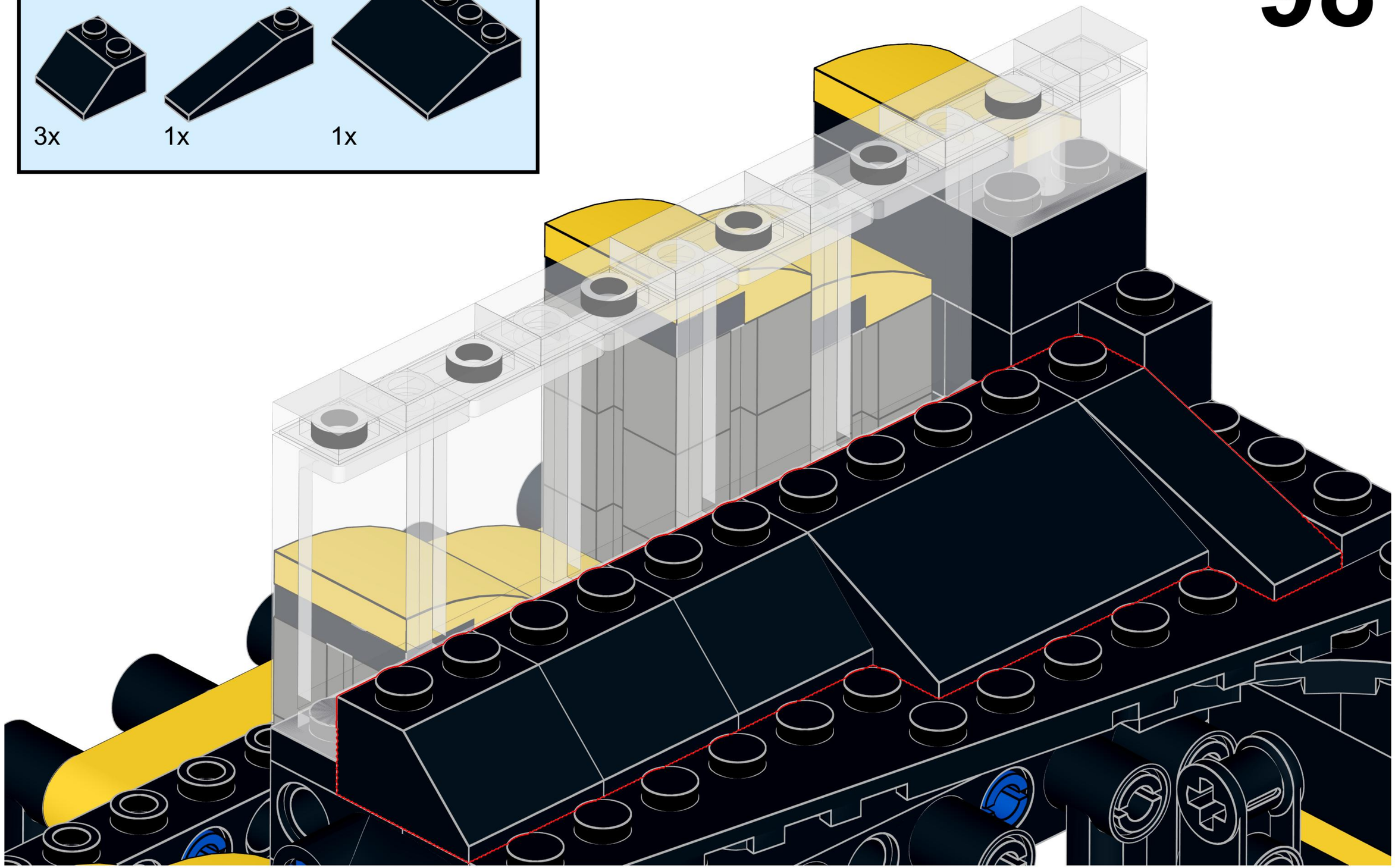

99

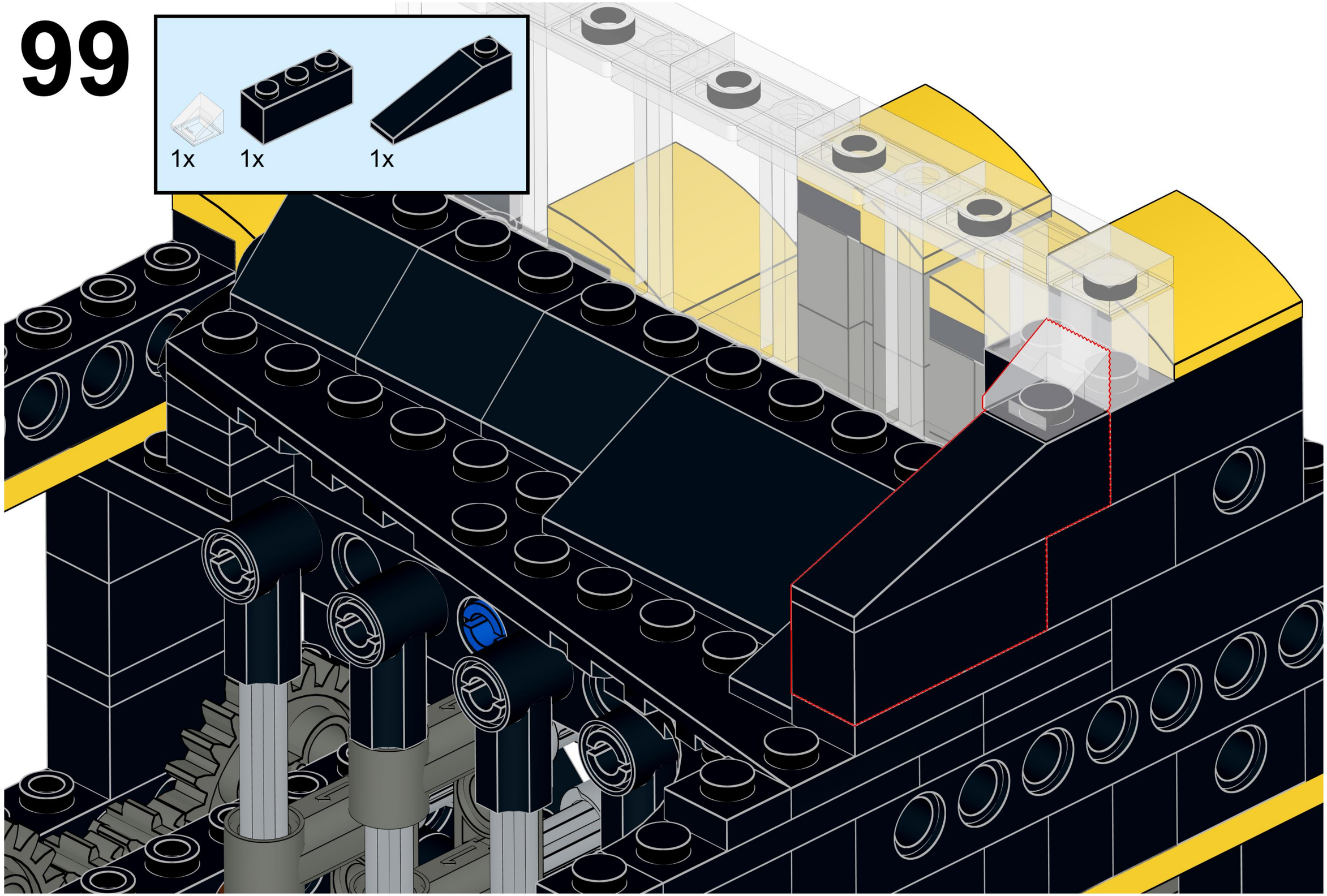

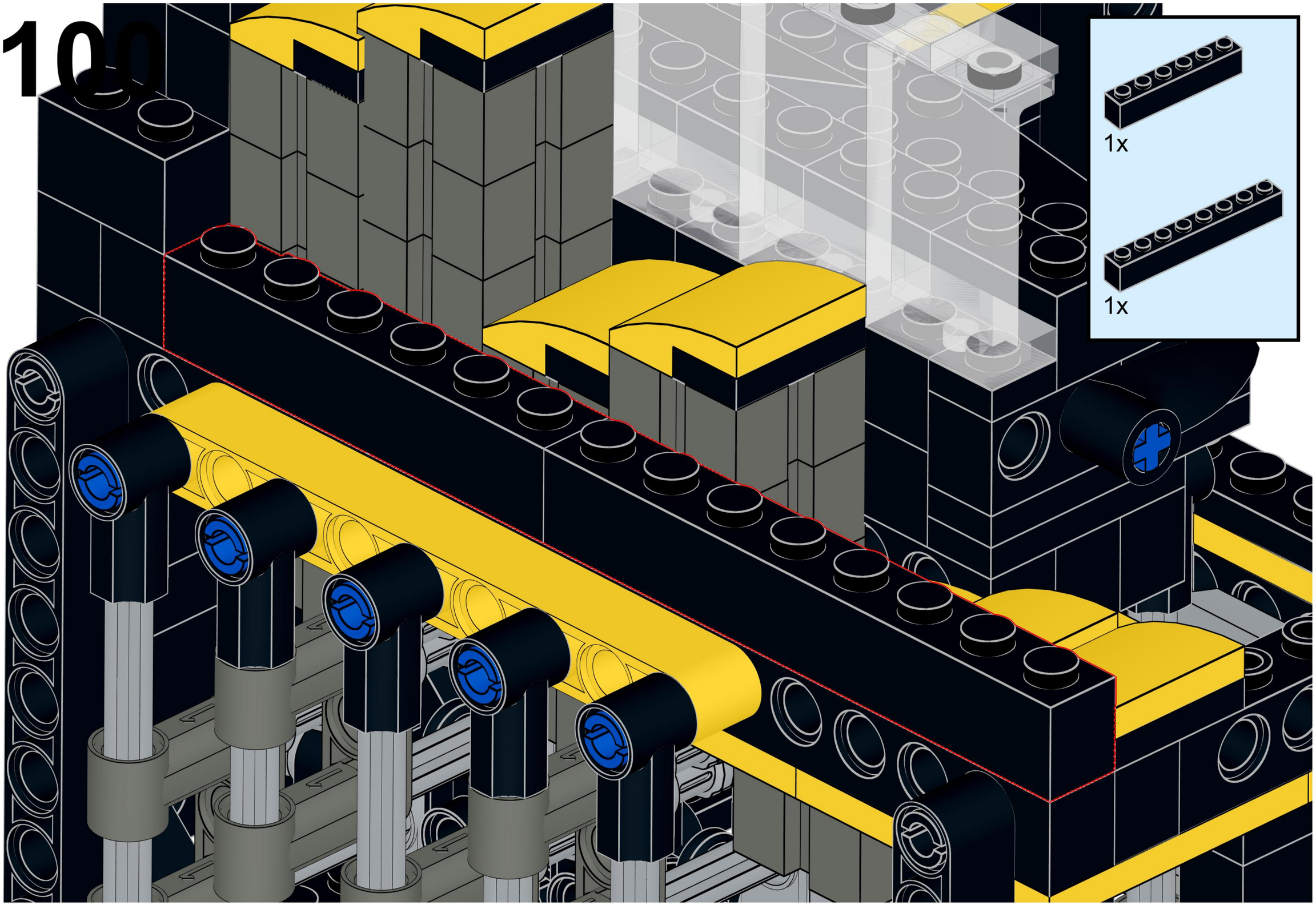
1x
1x

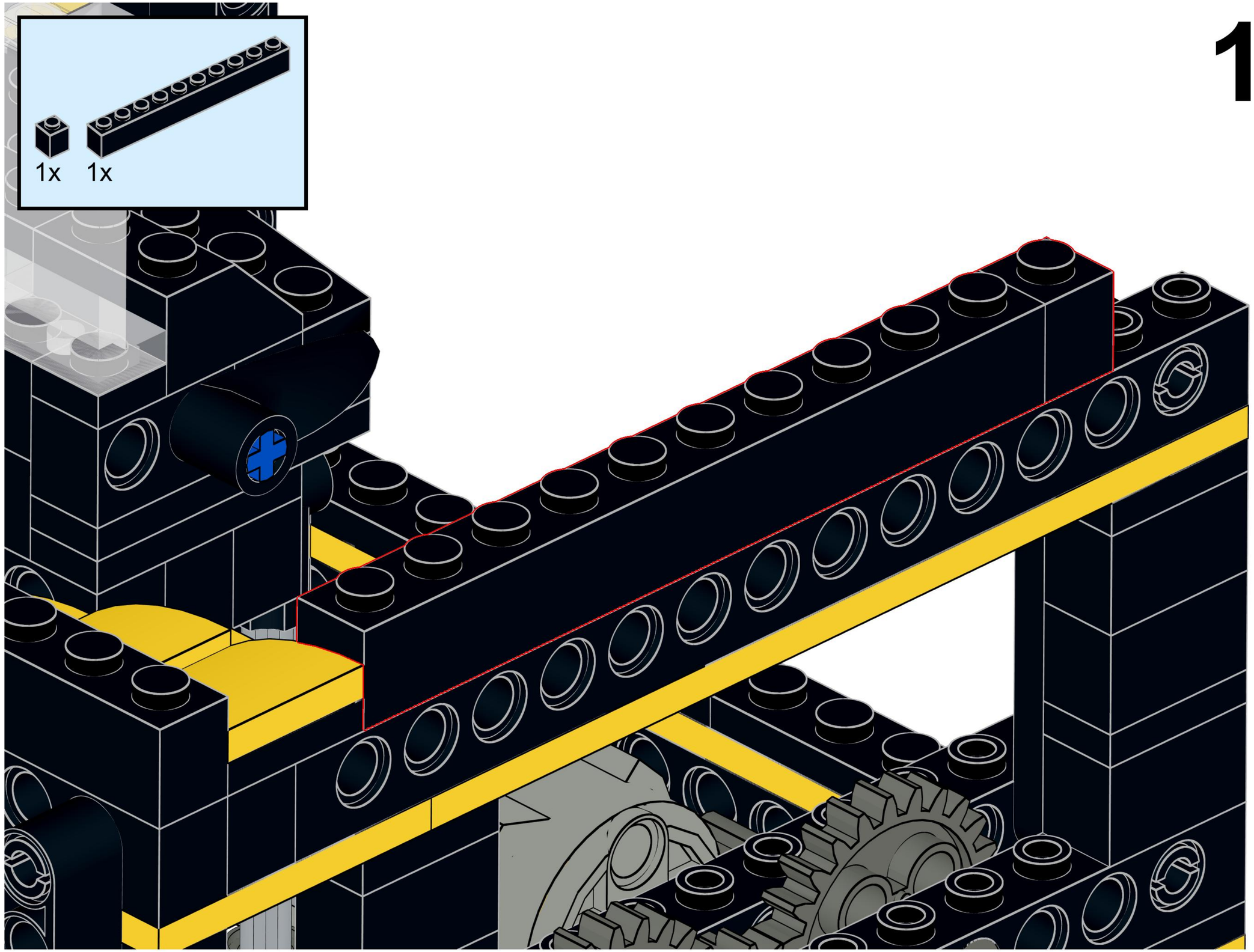
1x
1x

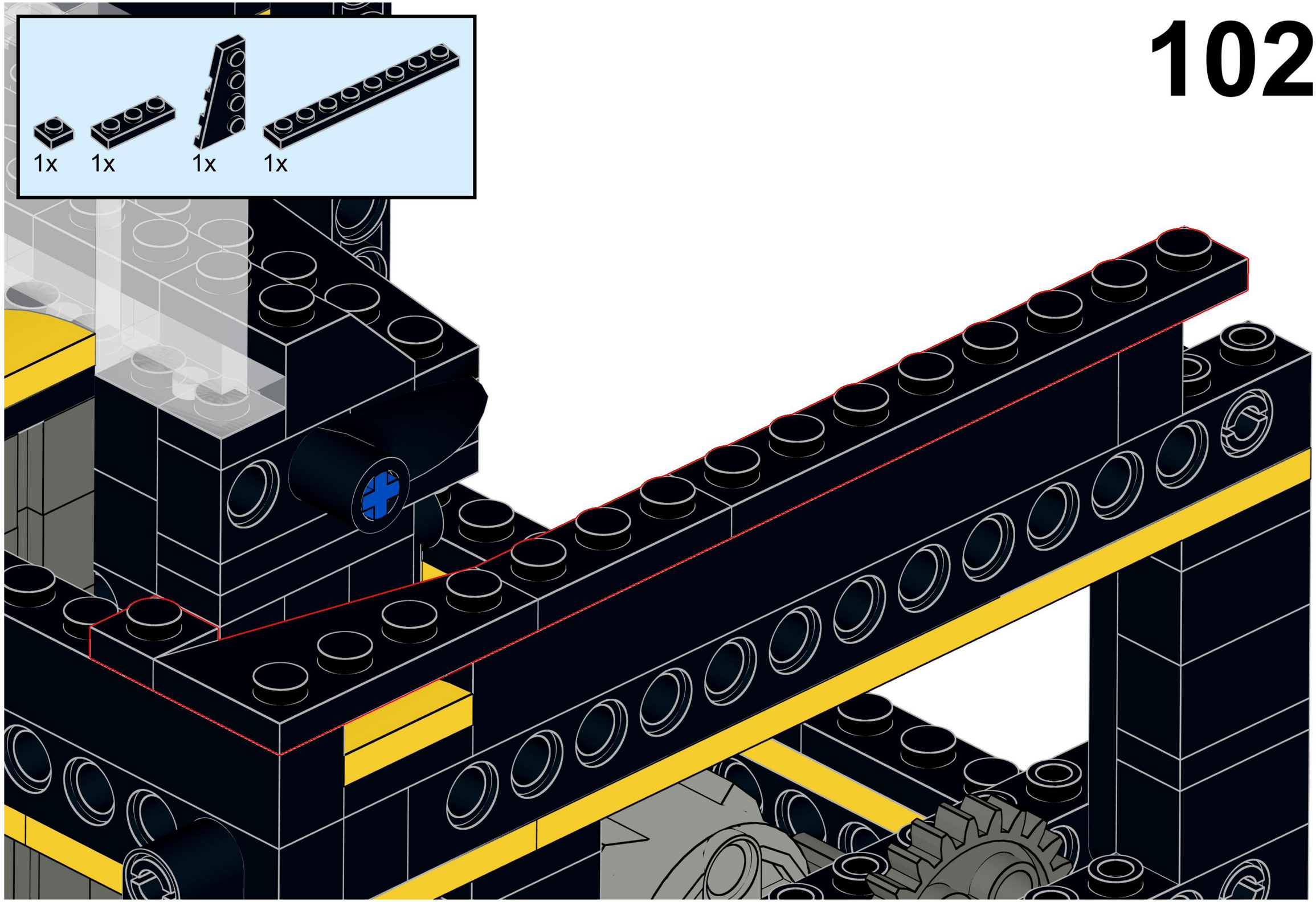
1x
1x
1x
1x

103

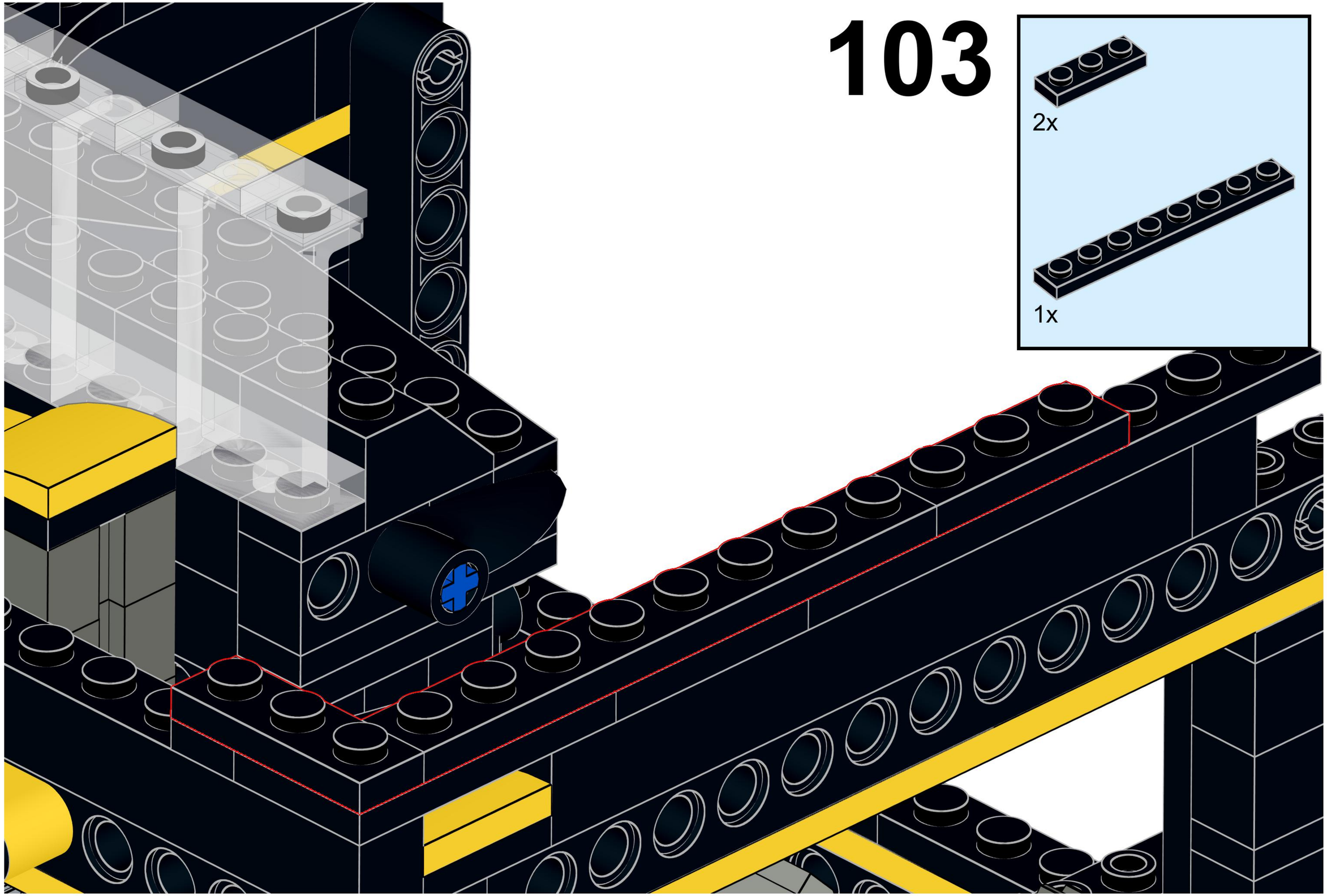

104

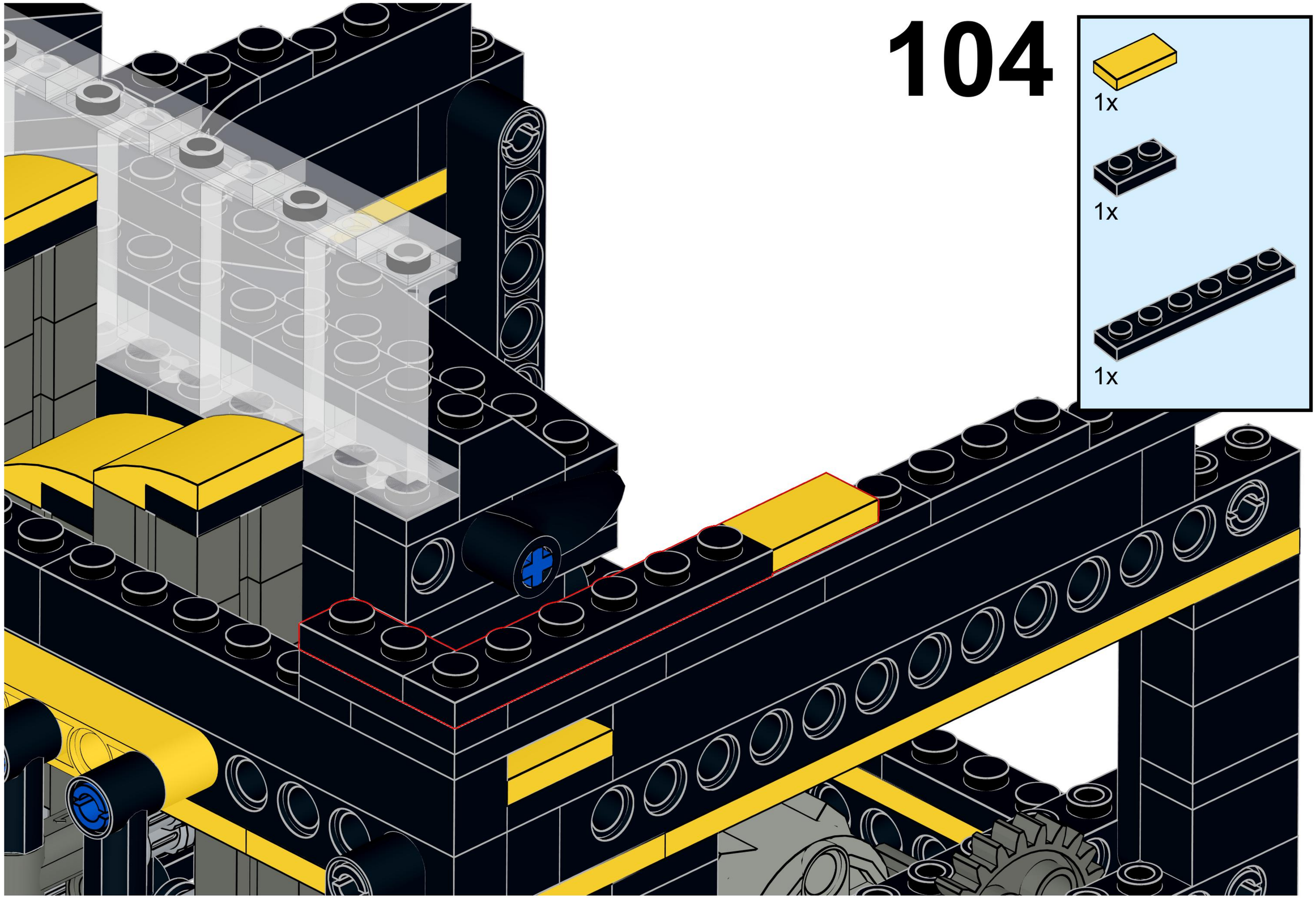

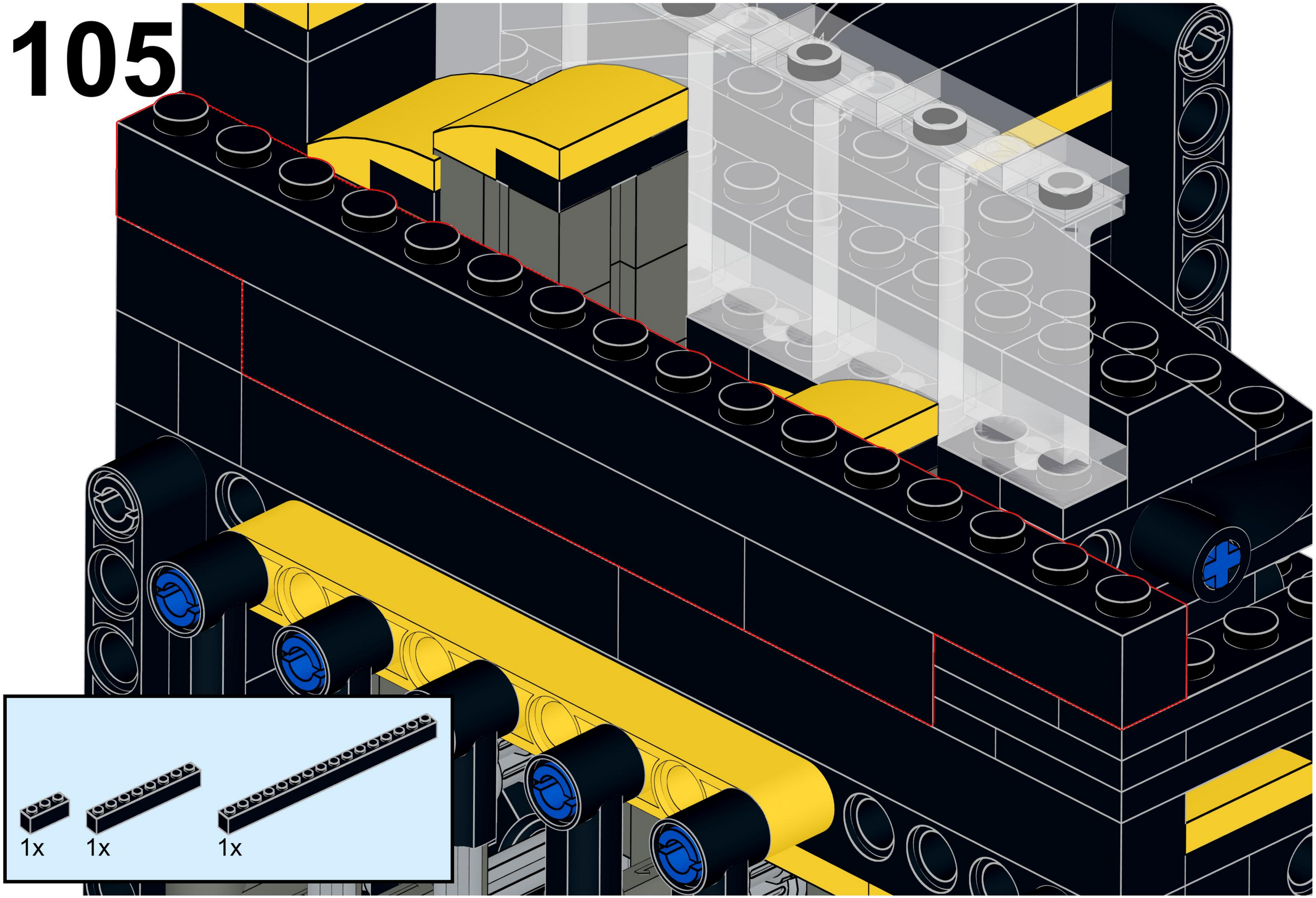
1x
1x
1x

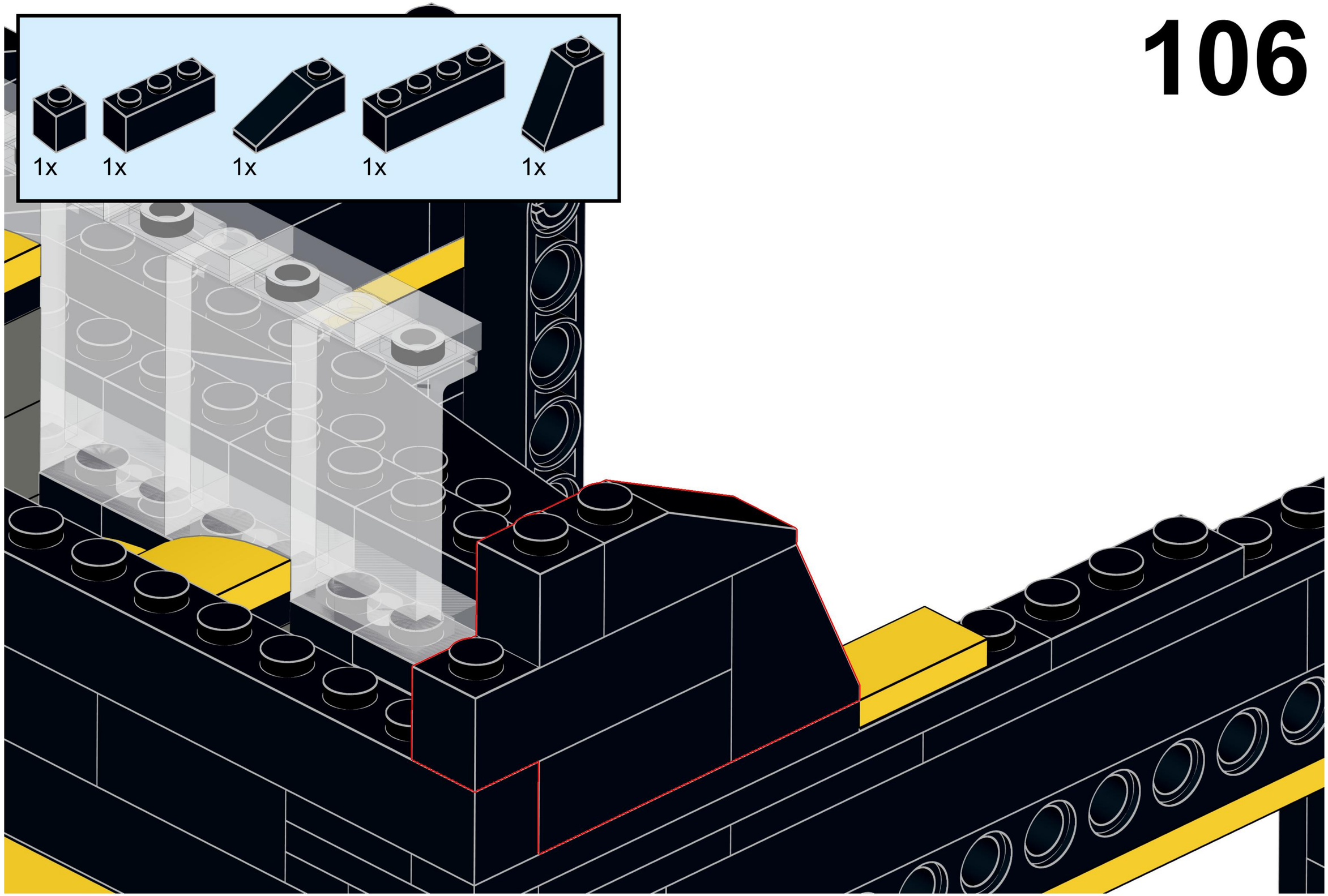
1x
1x
1x
1x
1x

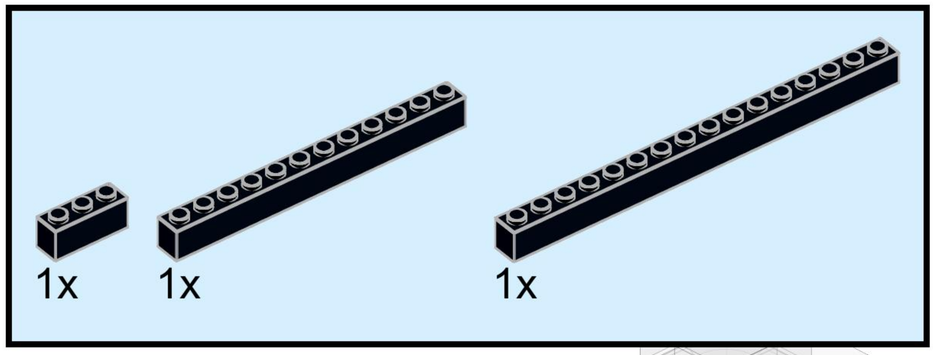
1x
1x
1x

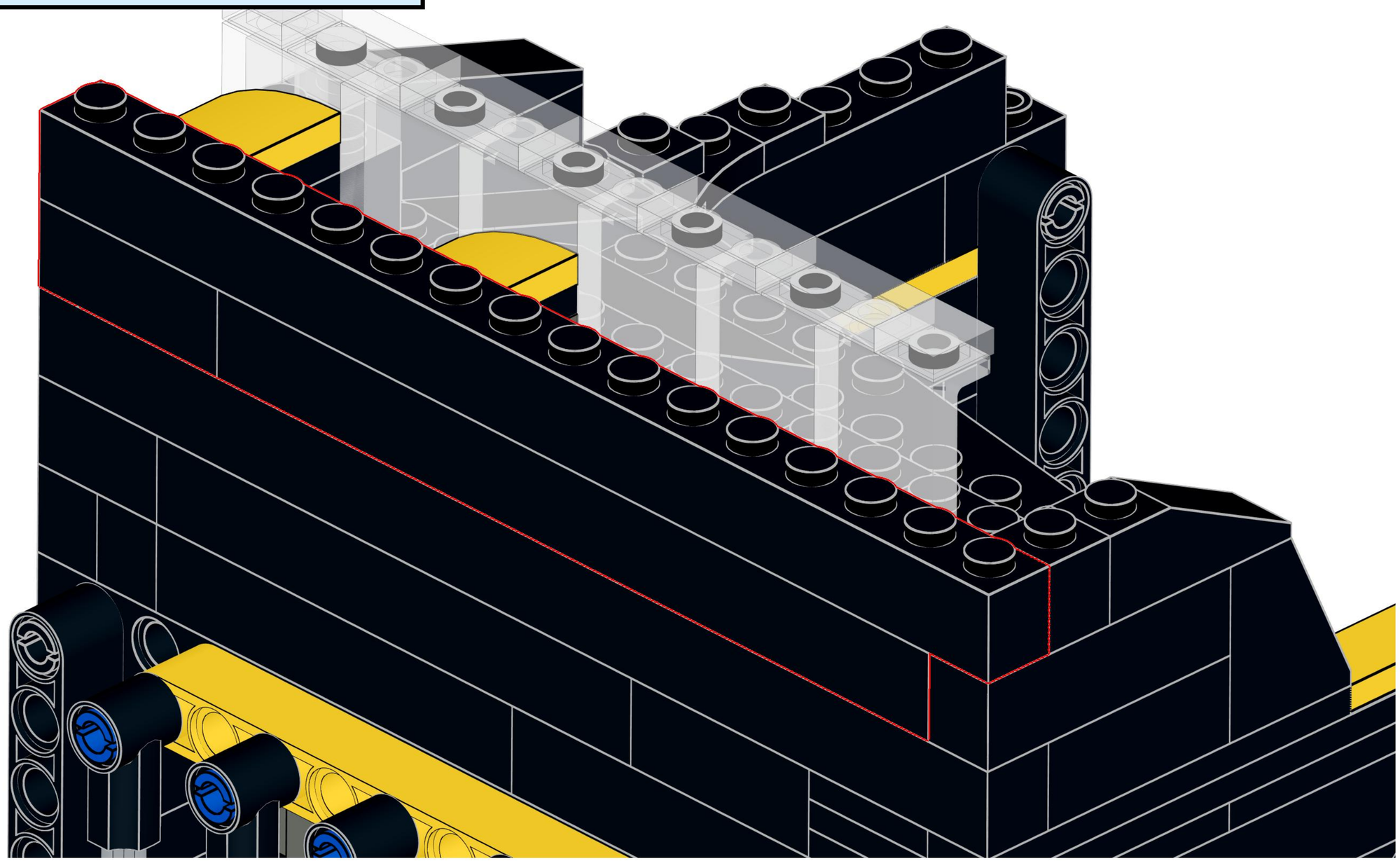

108

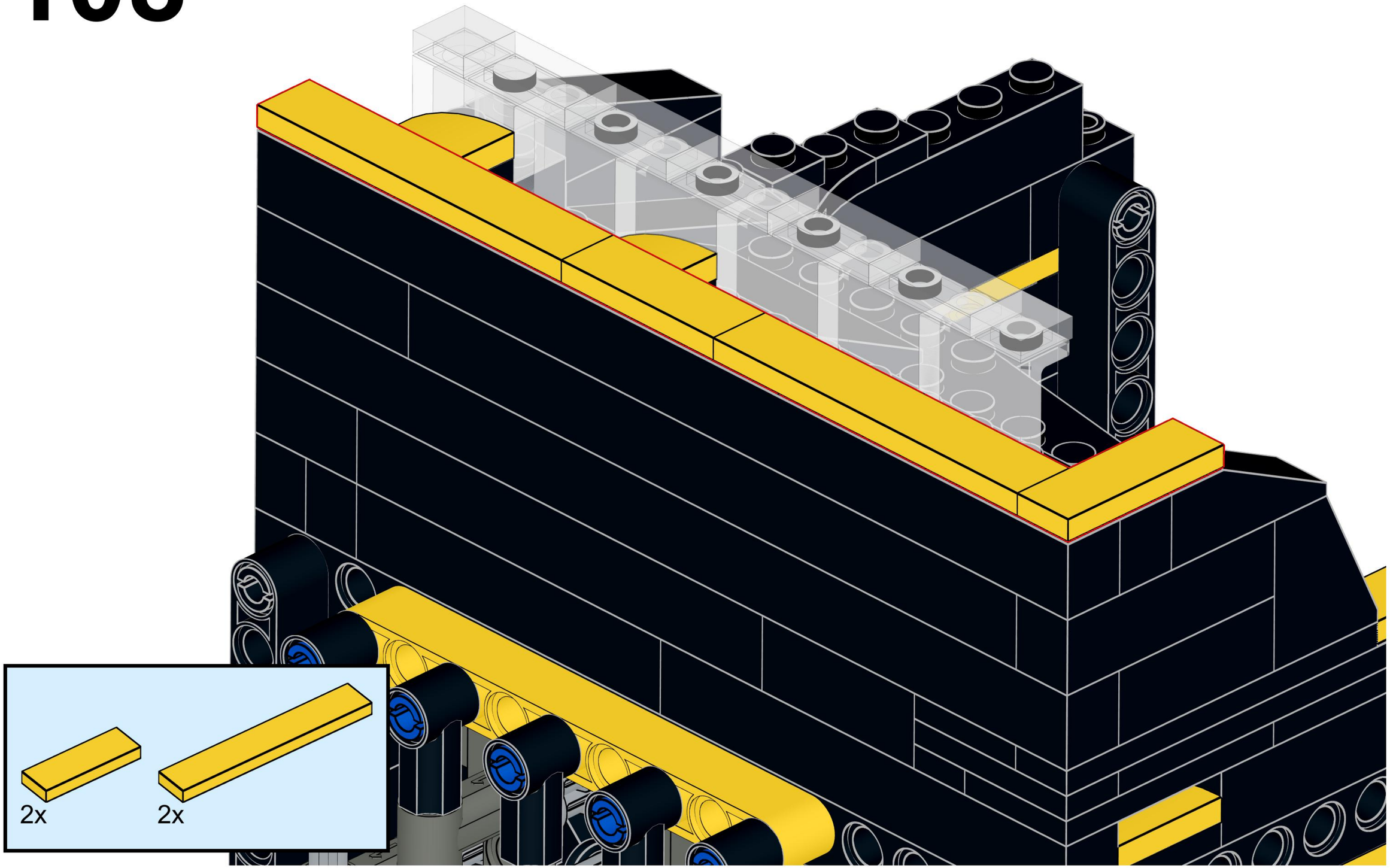

109

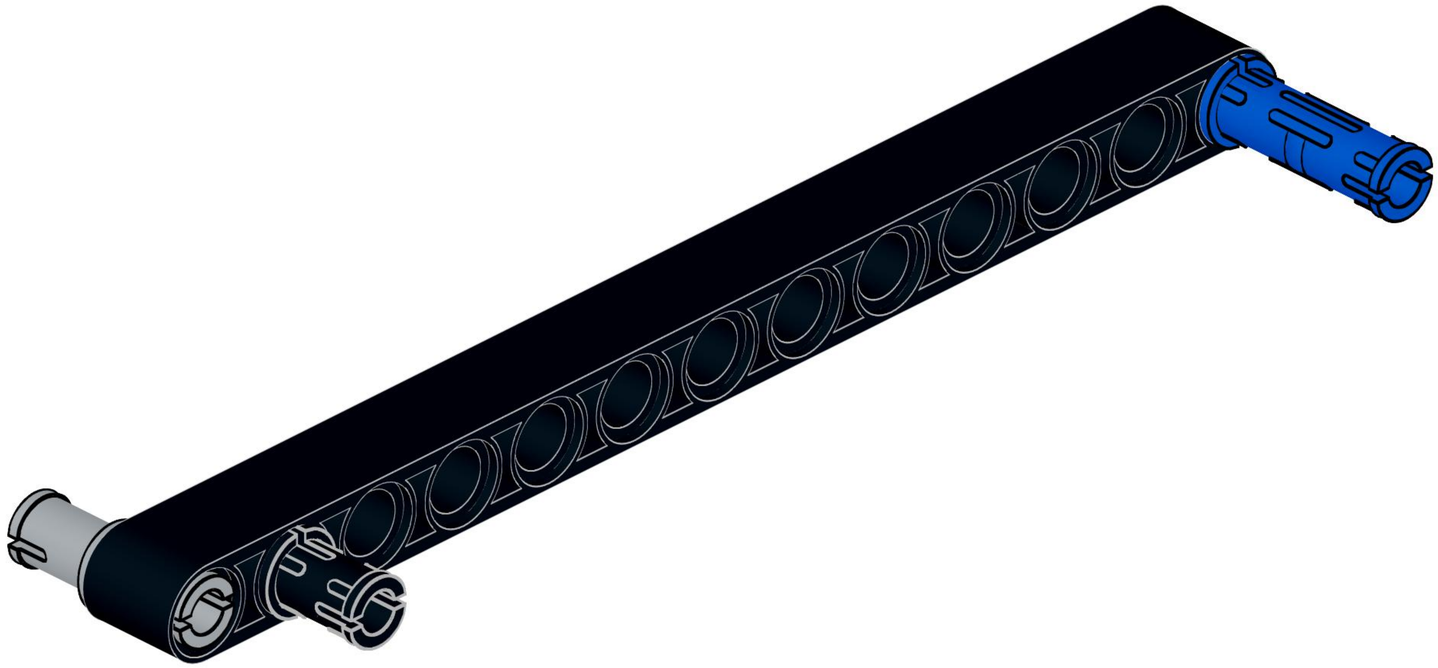

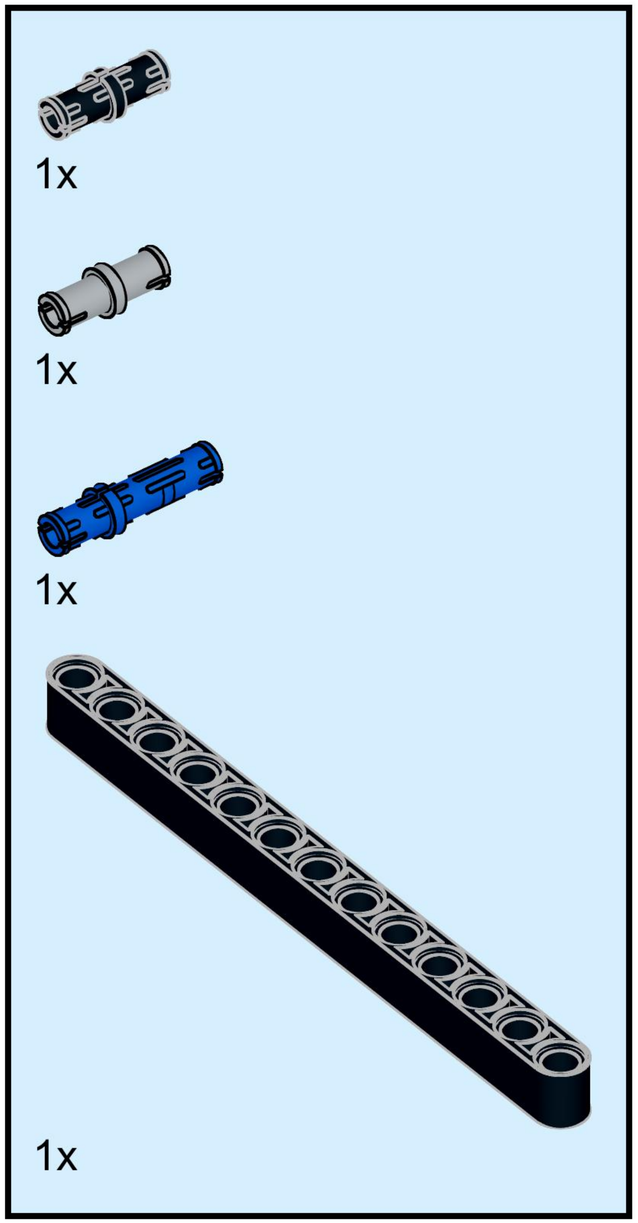

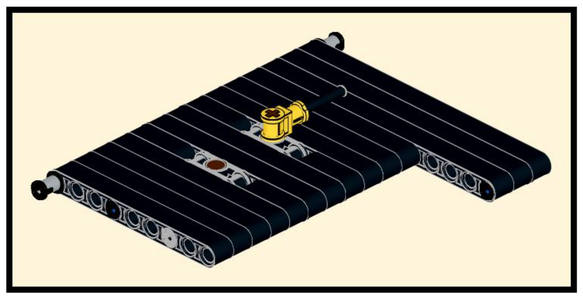

110

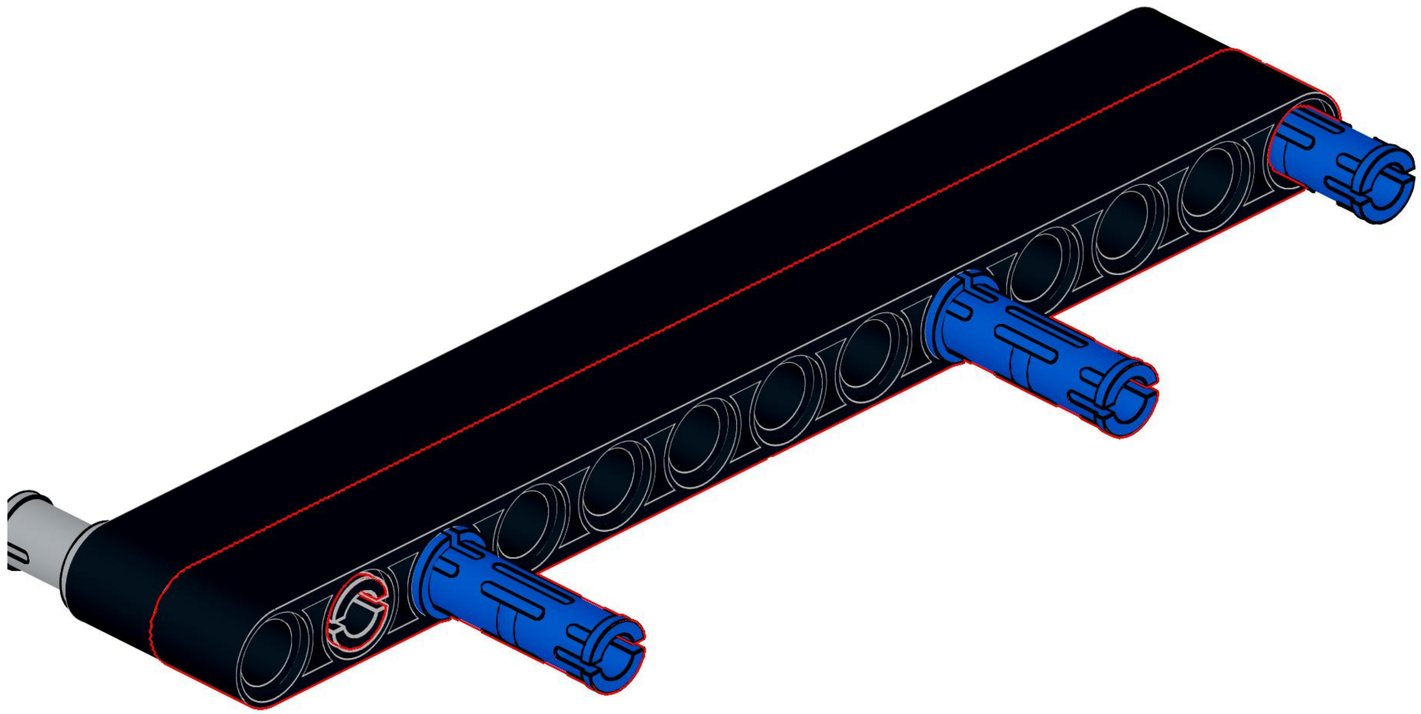

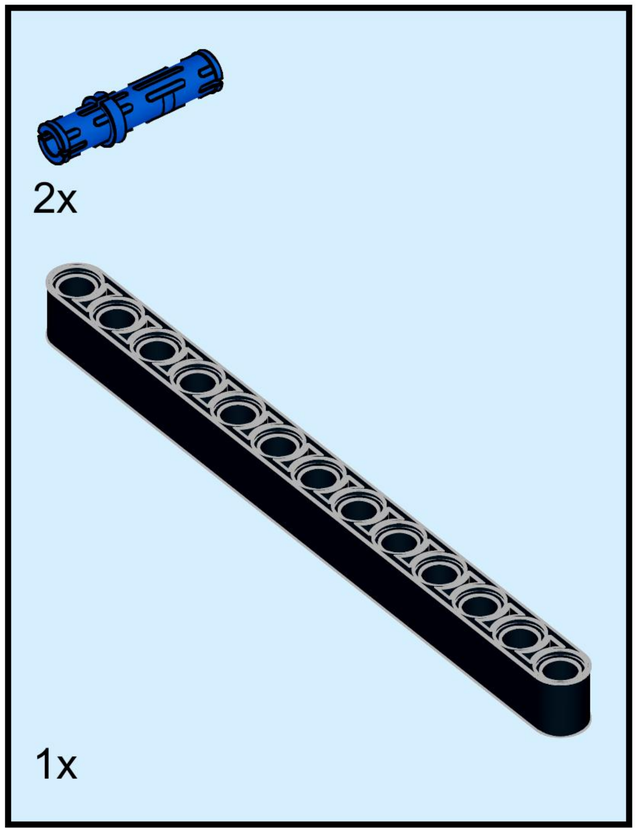

111

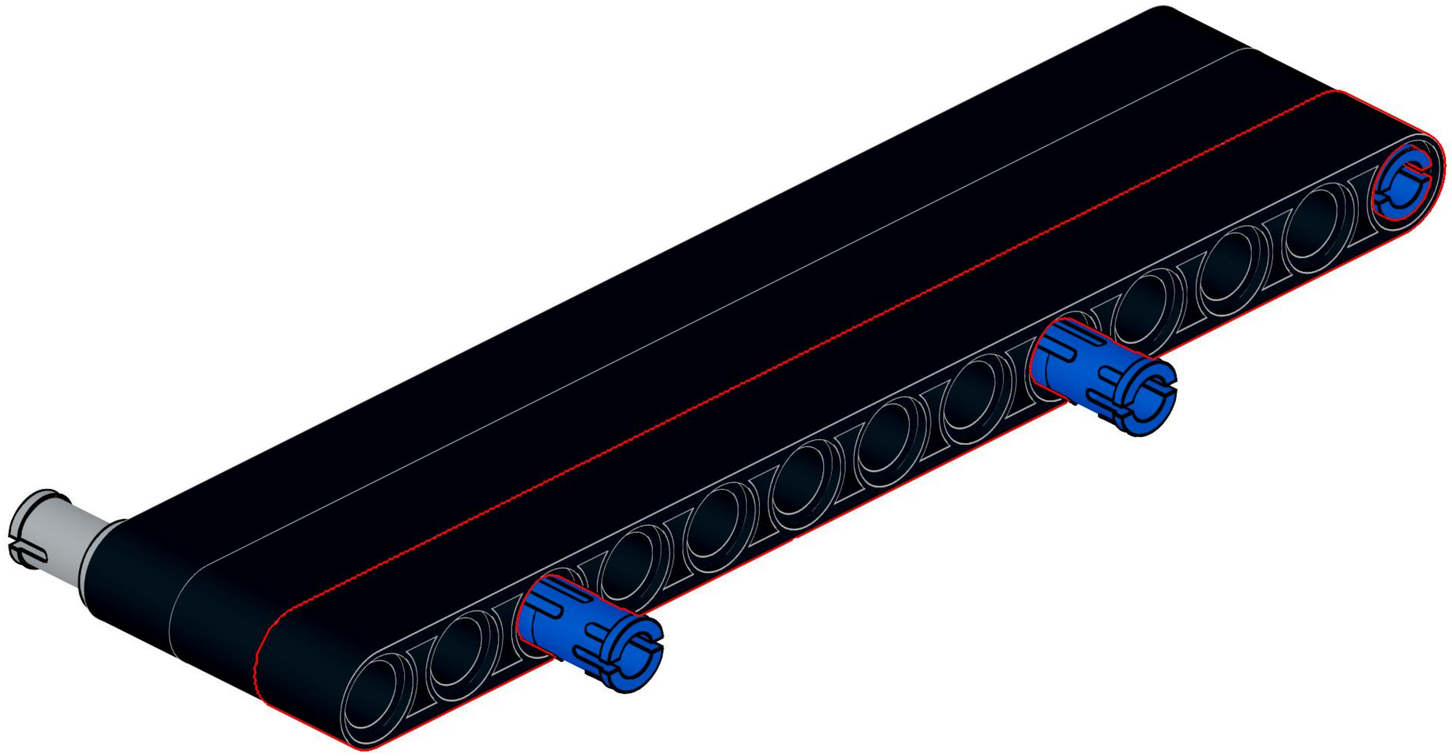

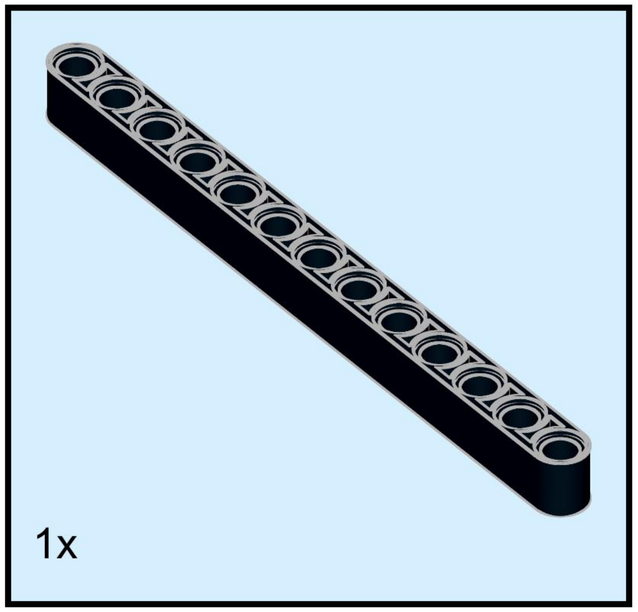

112

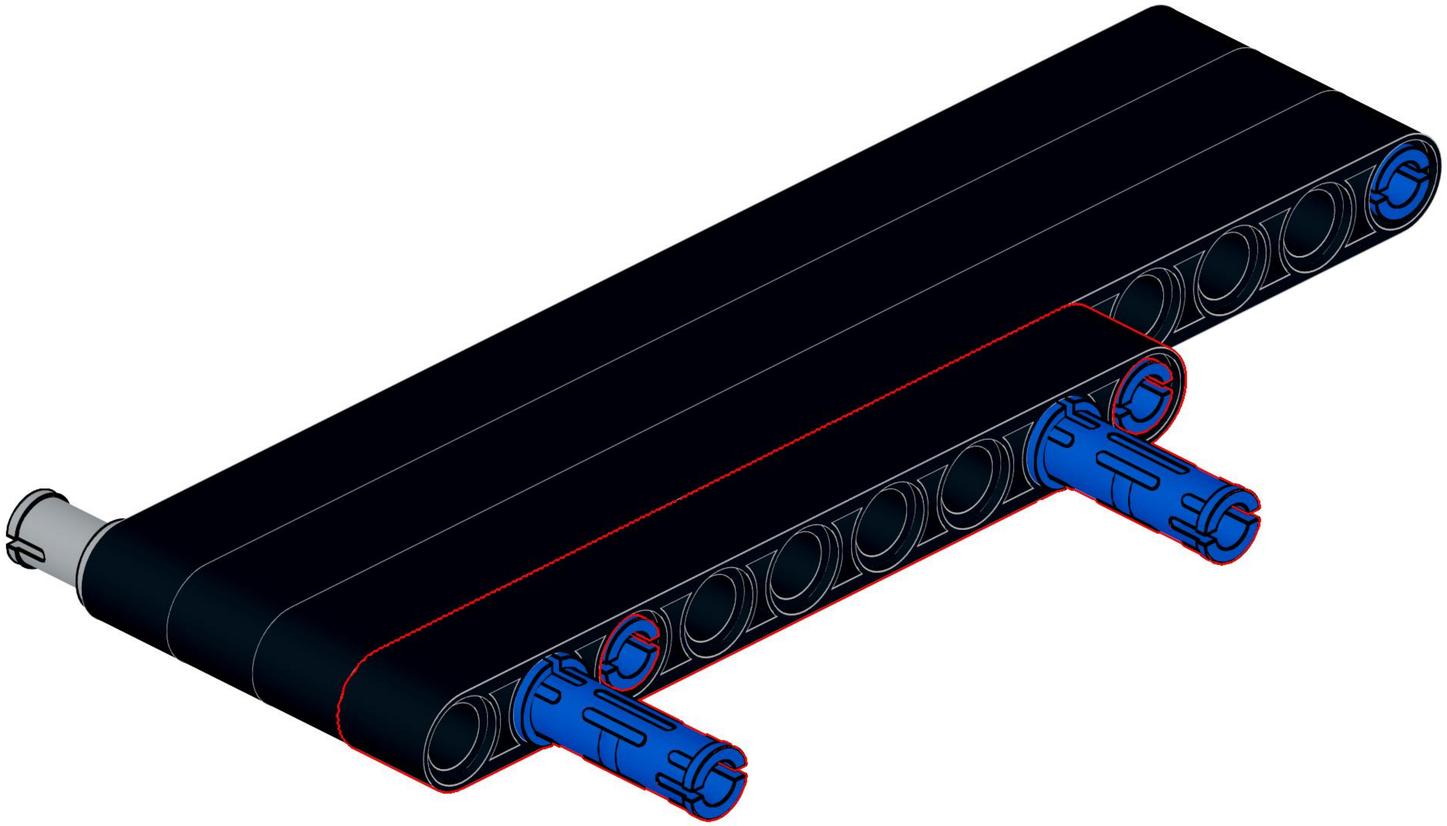

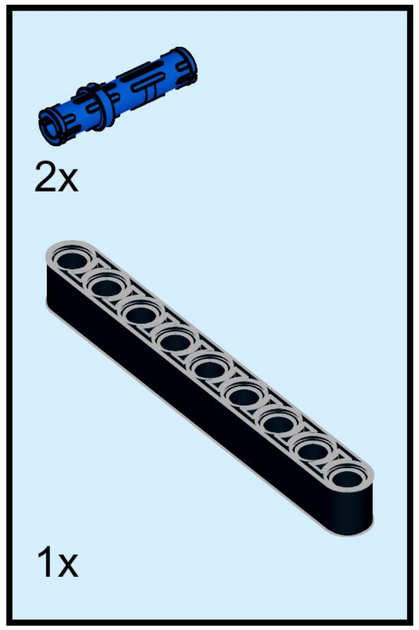

113

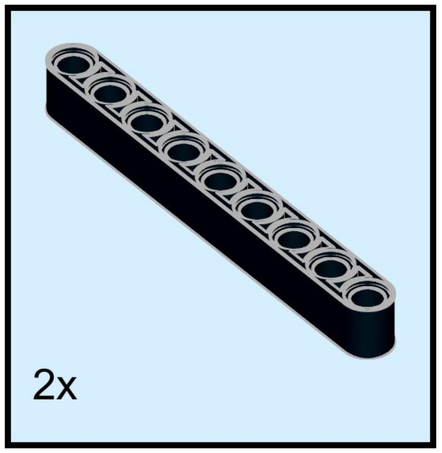

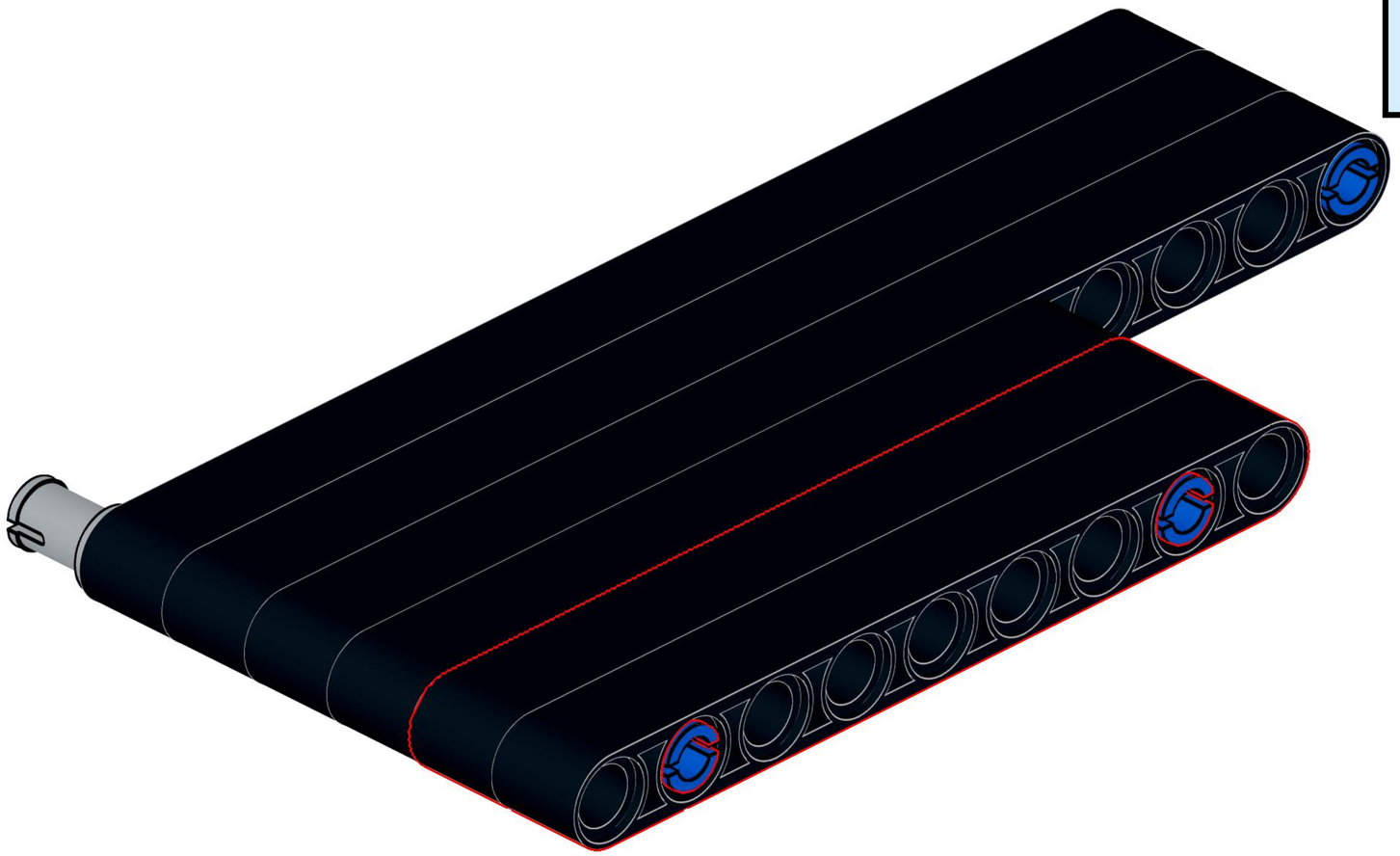

114

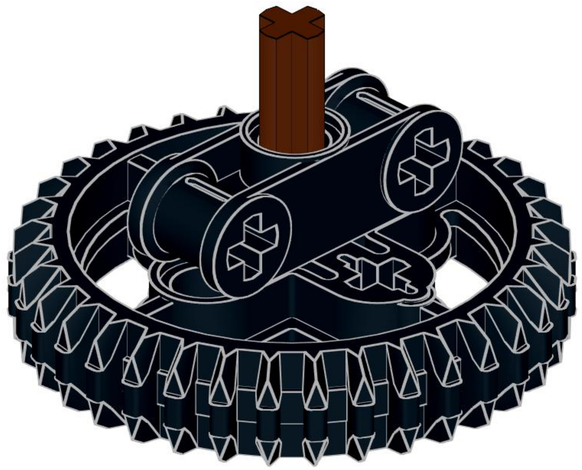

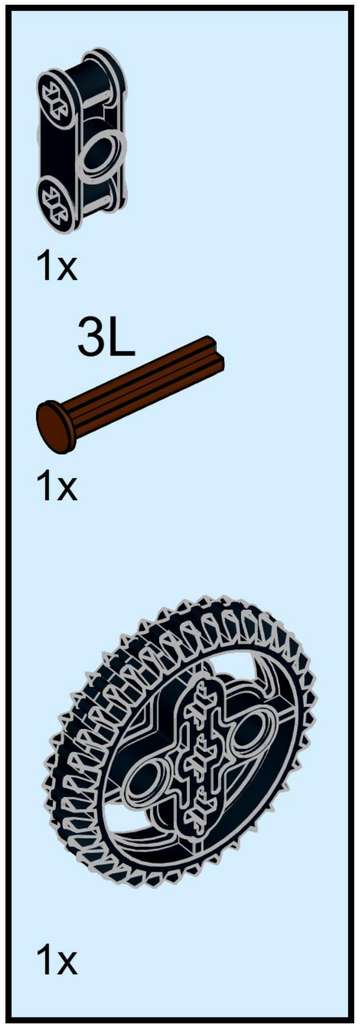

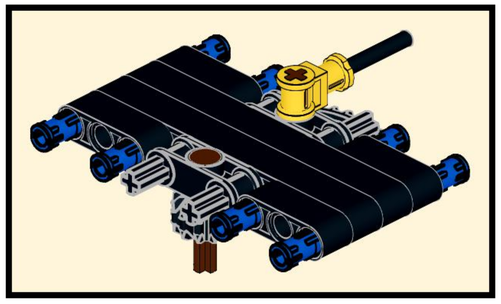

115

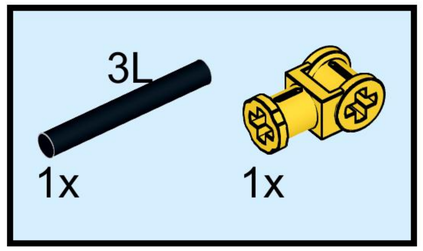

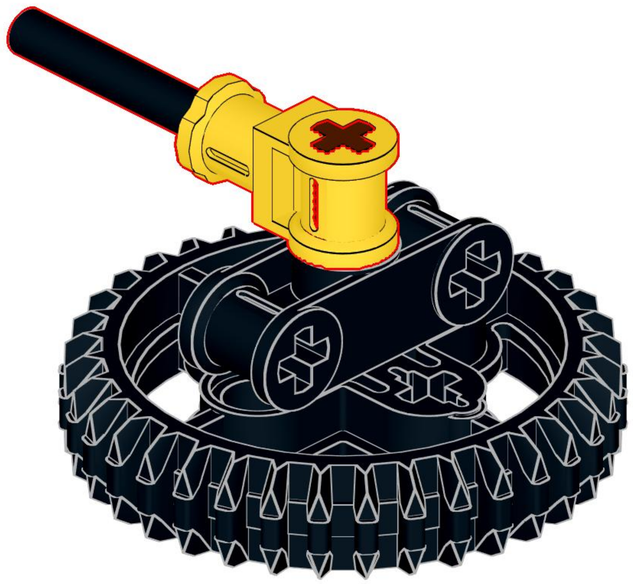

116

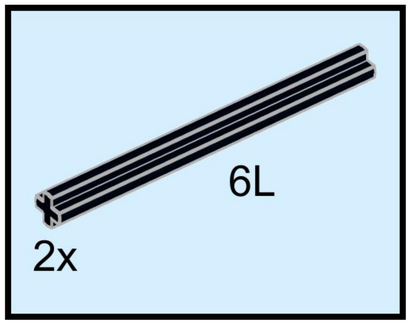

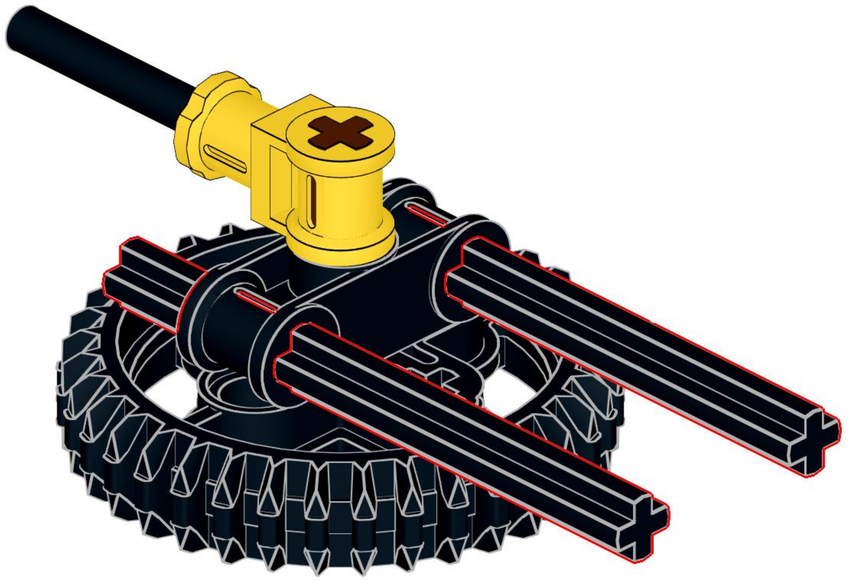

117

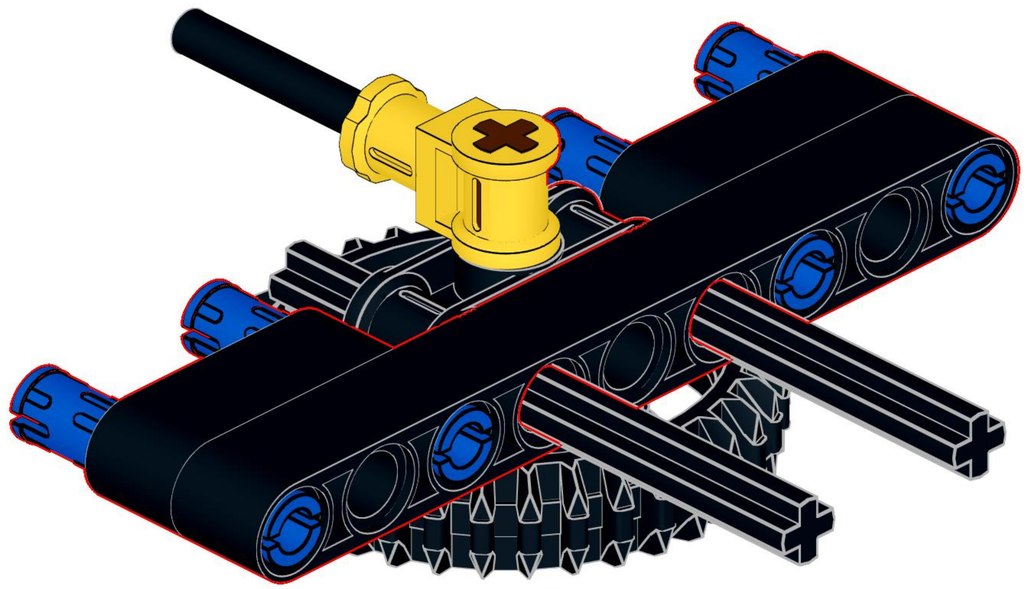

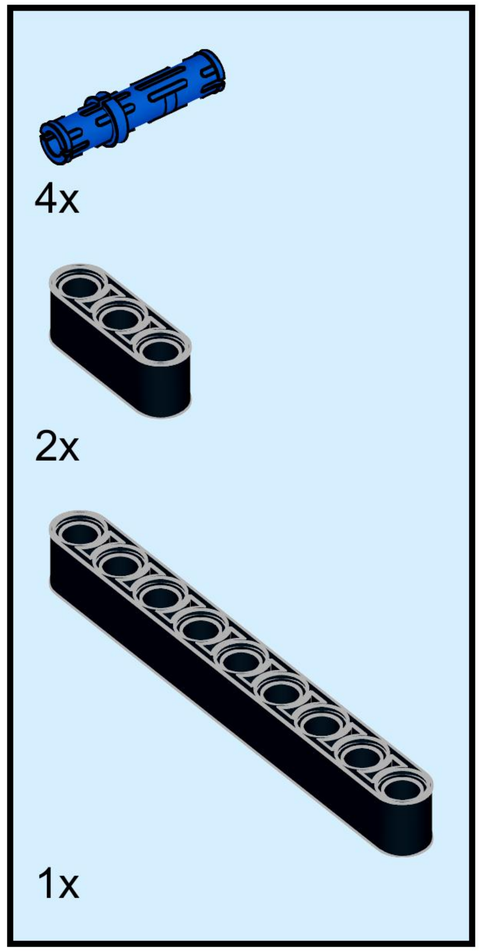

118

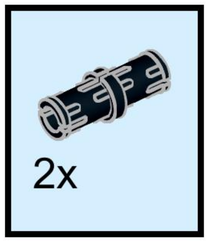

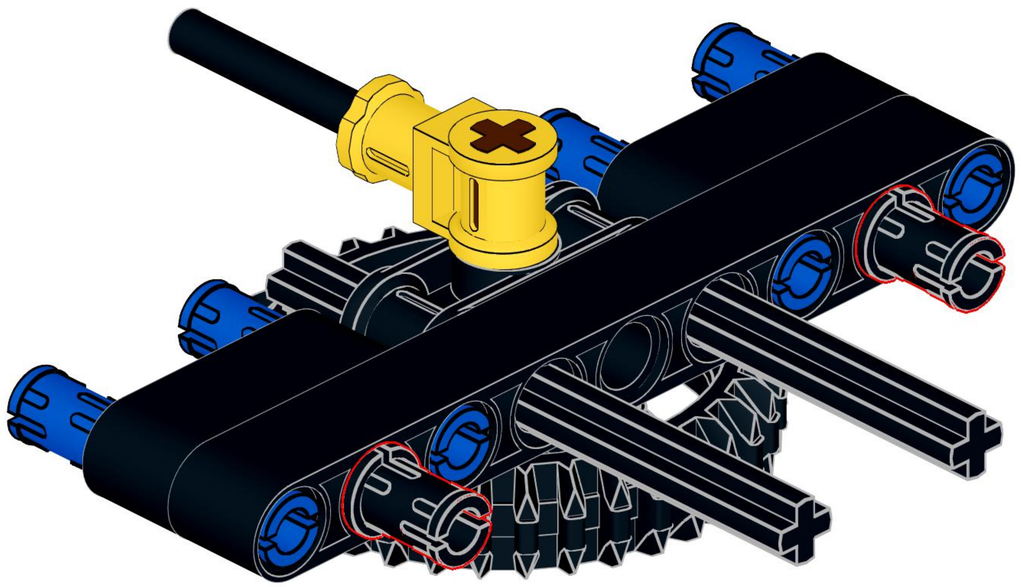

119

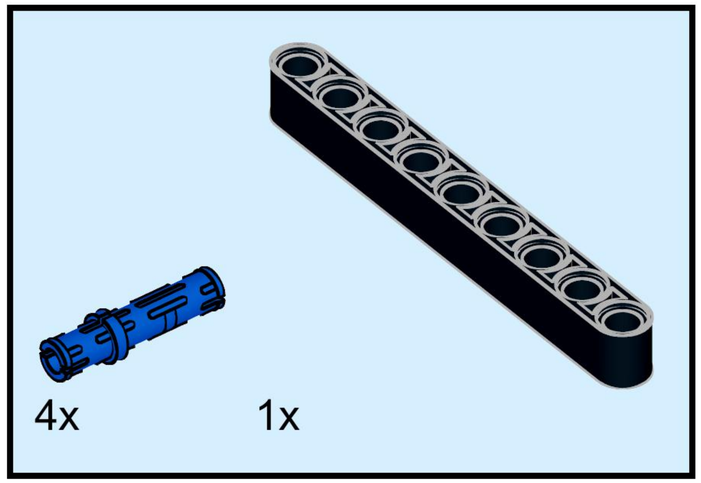

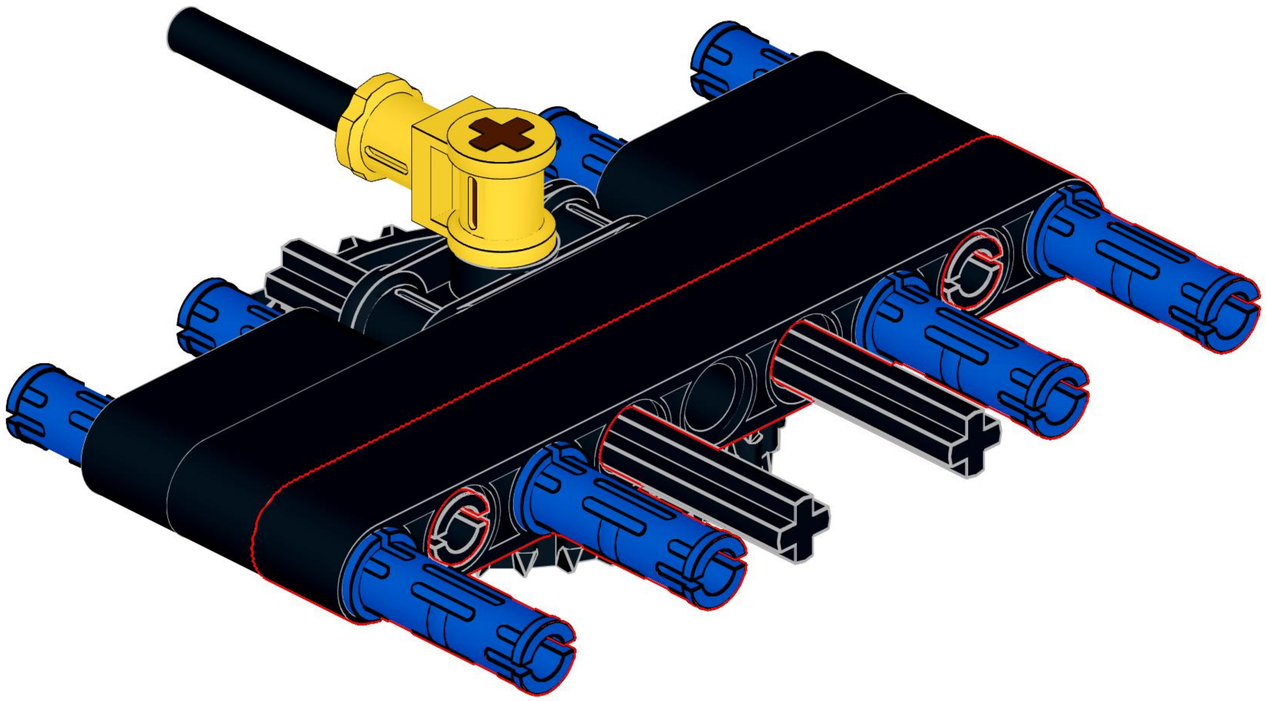

120

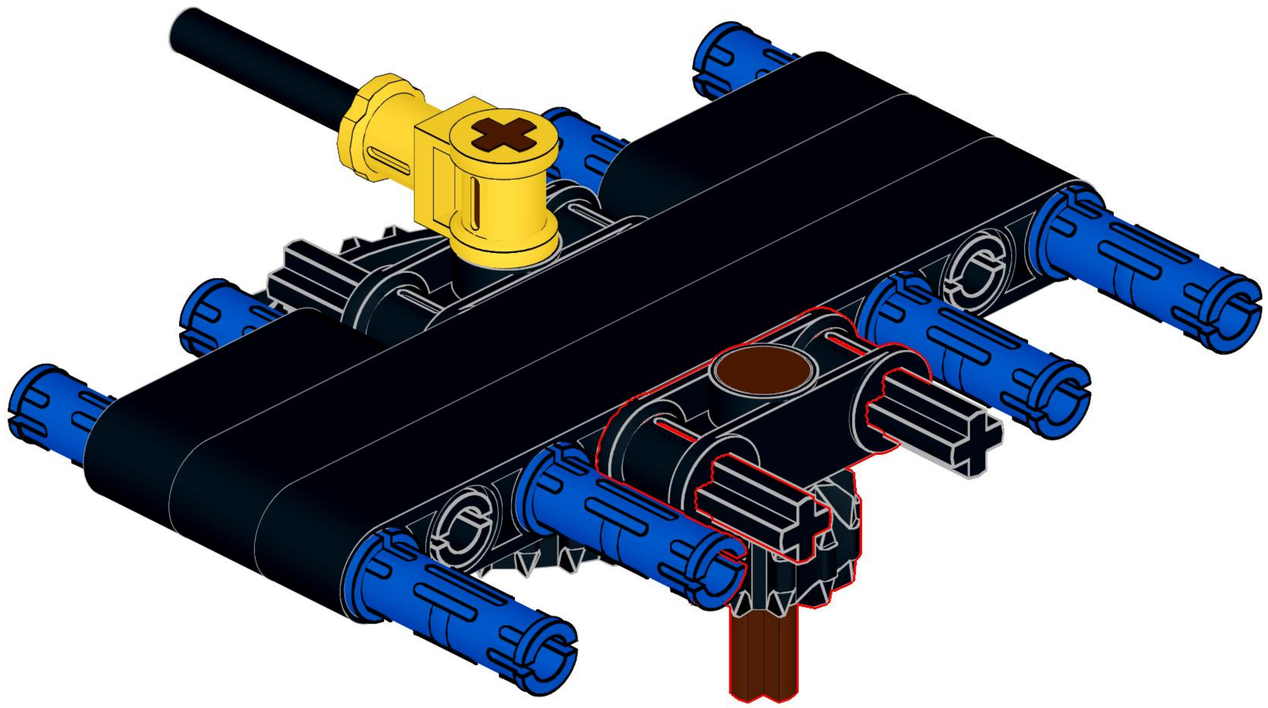

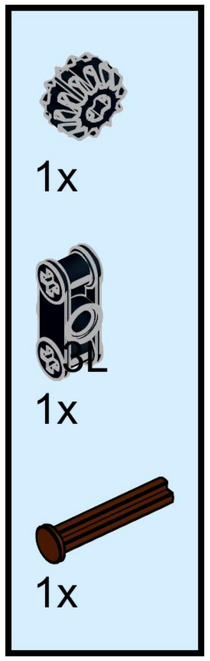

121

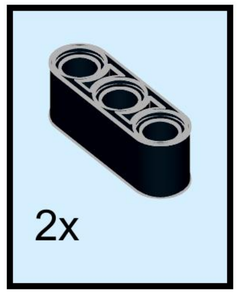

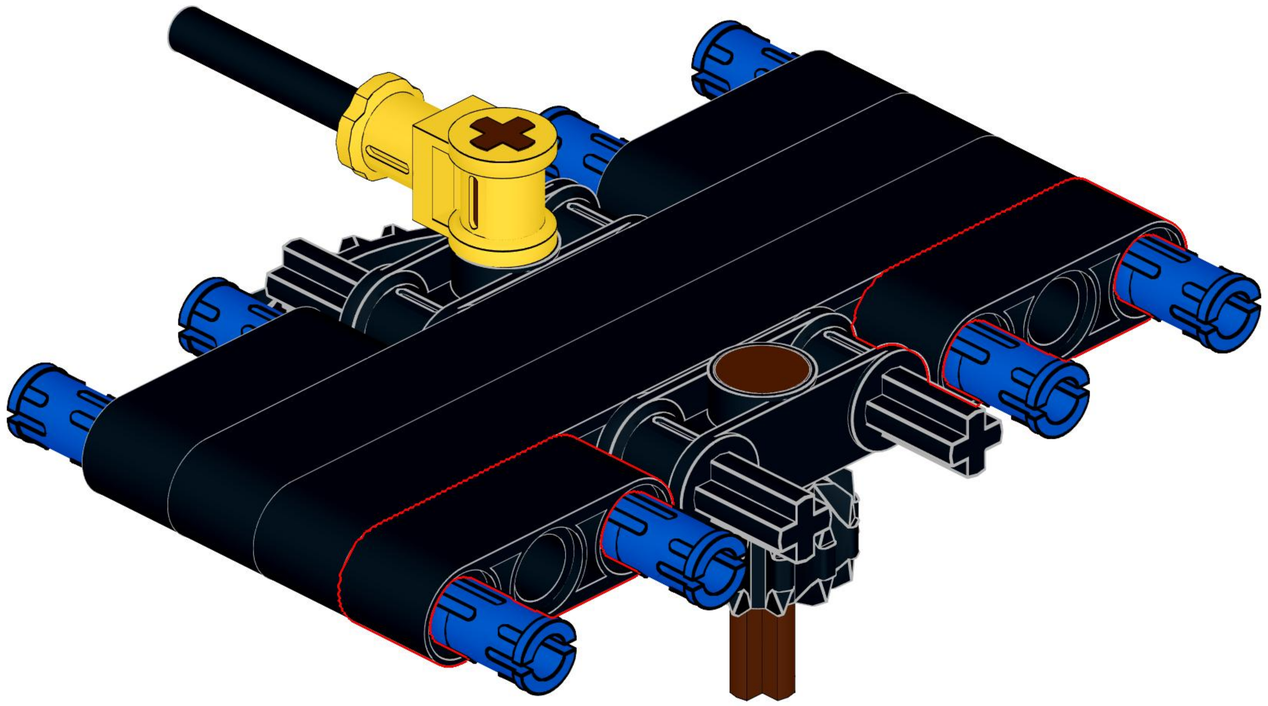

122

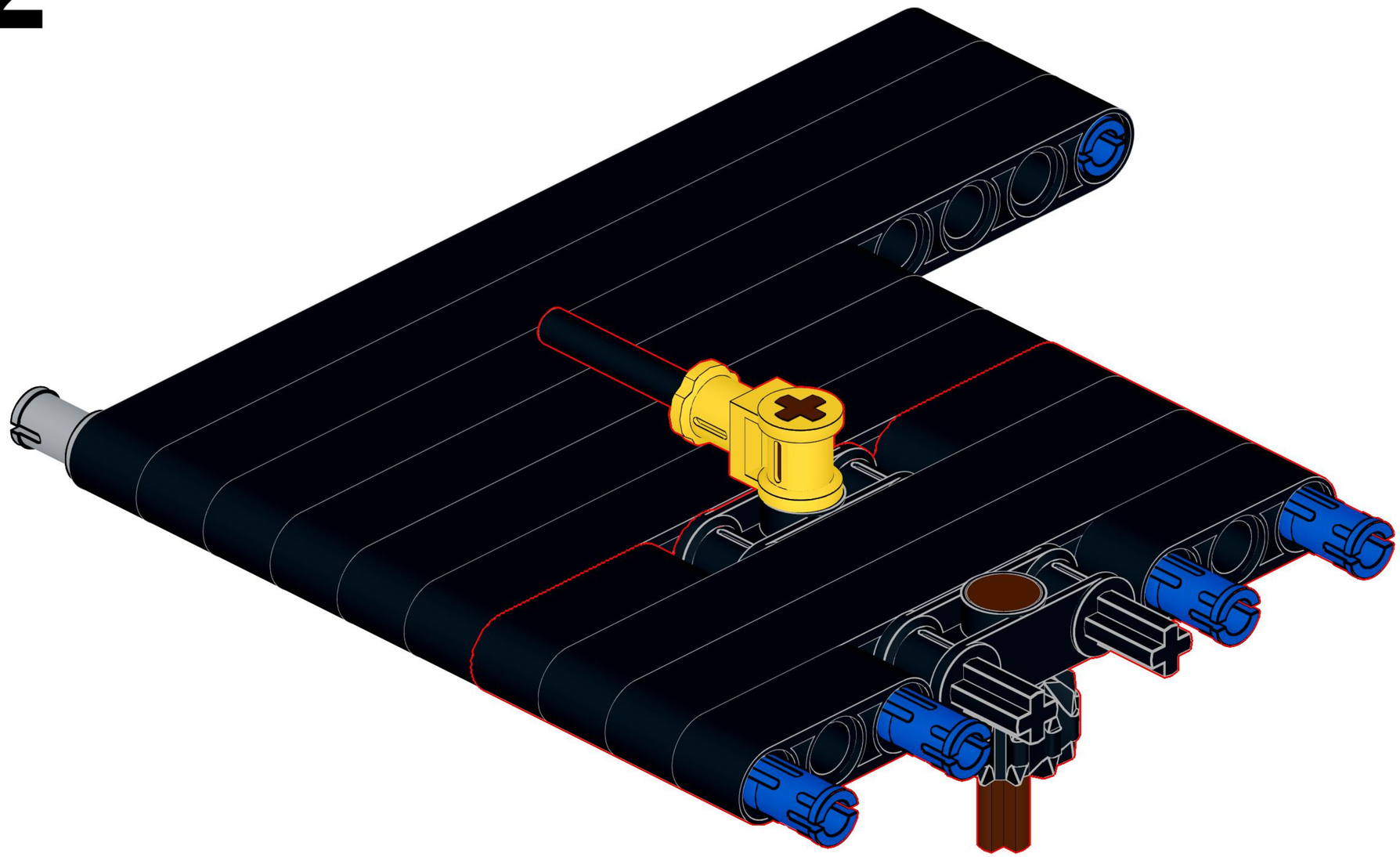

The universal joint that will be part of the agitator drive assembly later in the instructions should be attached to this axle.

123

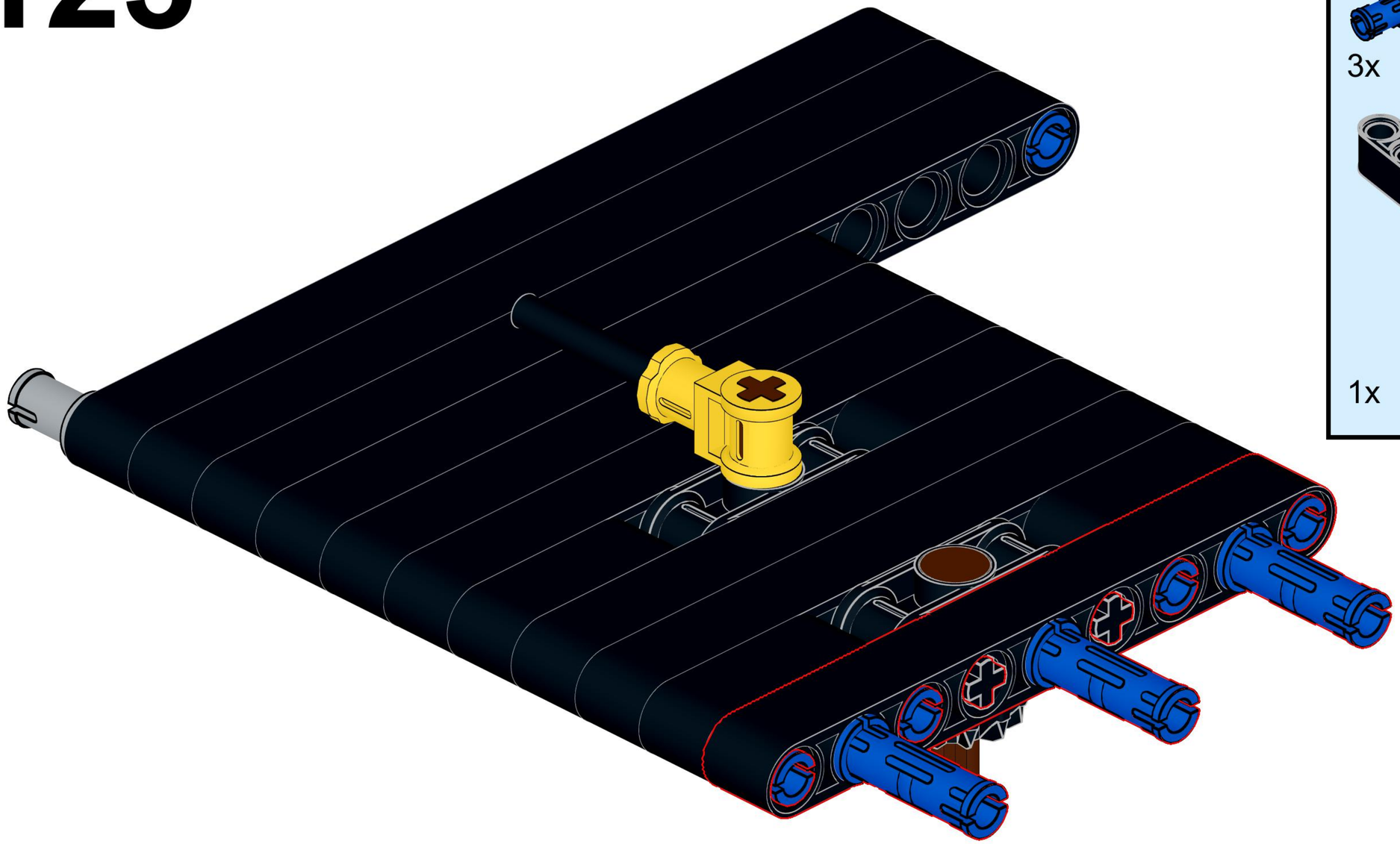

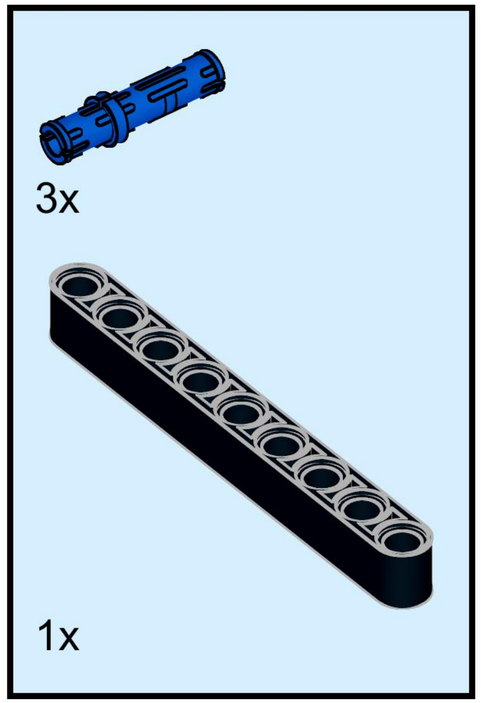

124

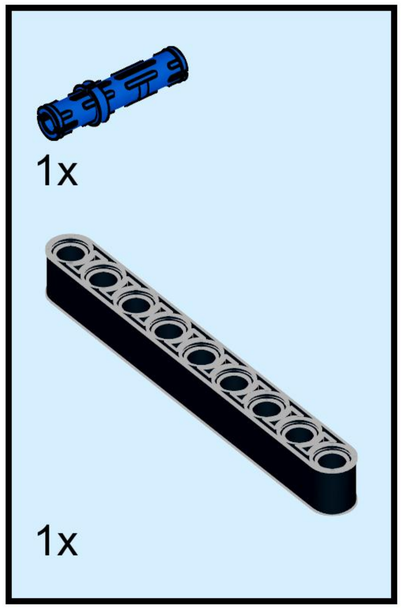

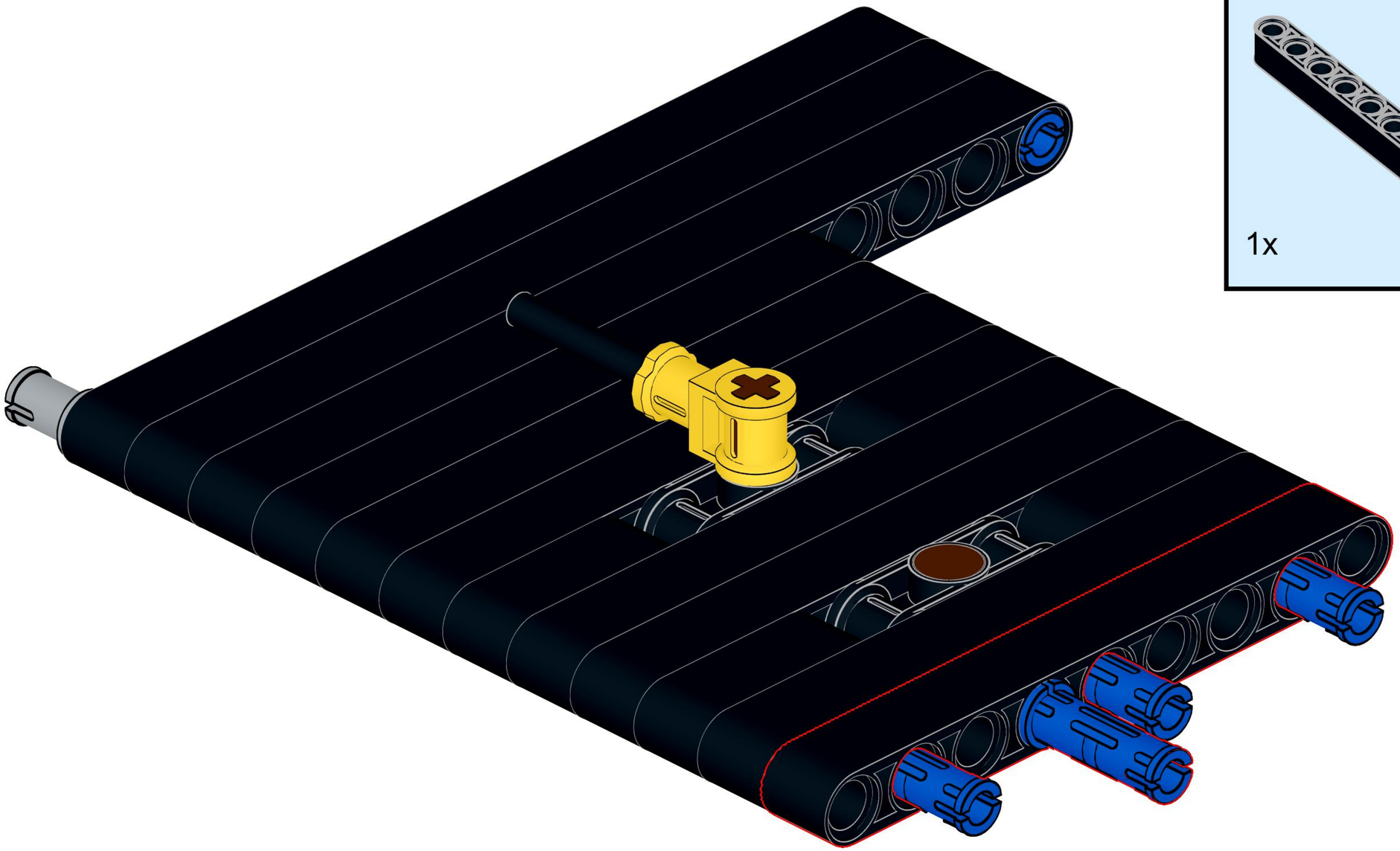

125

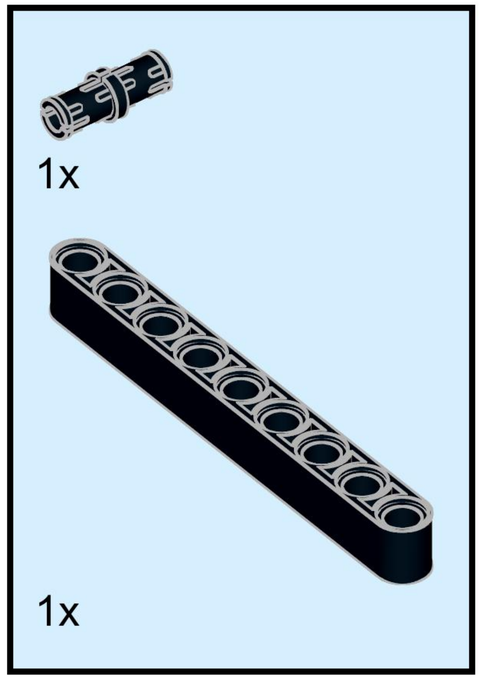

126

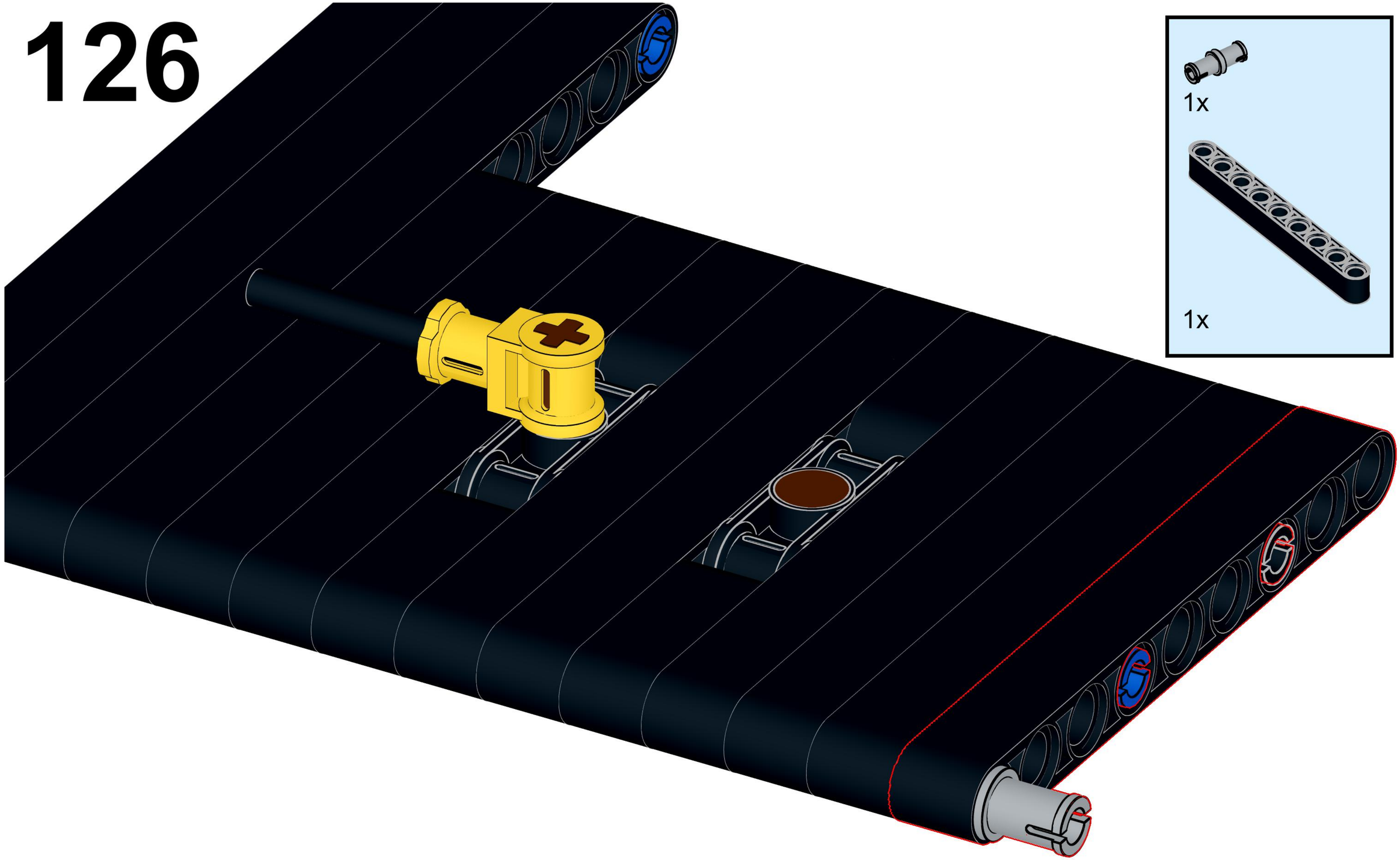

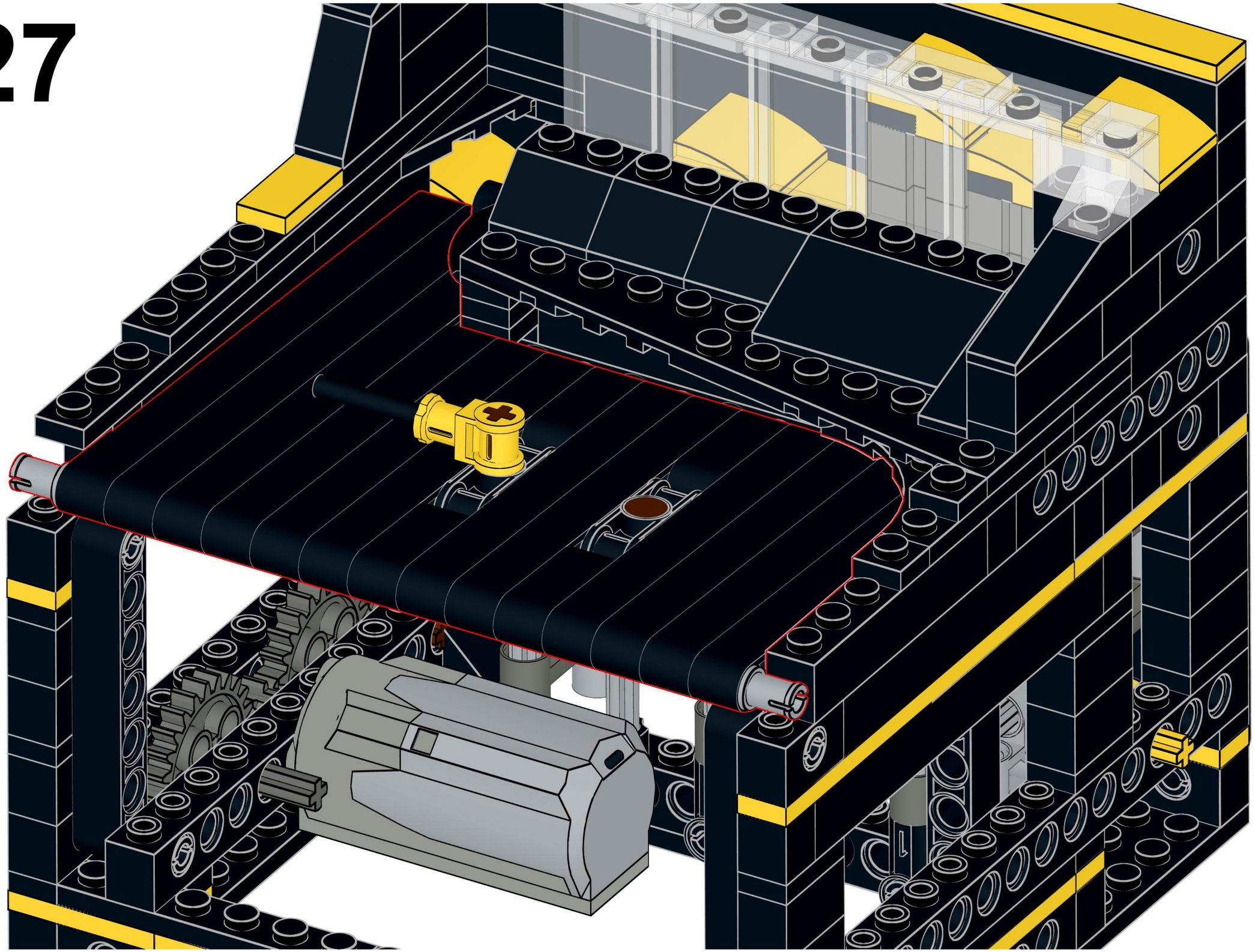

128

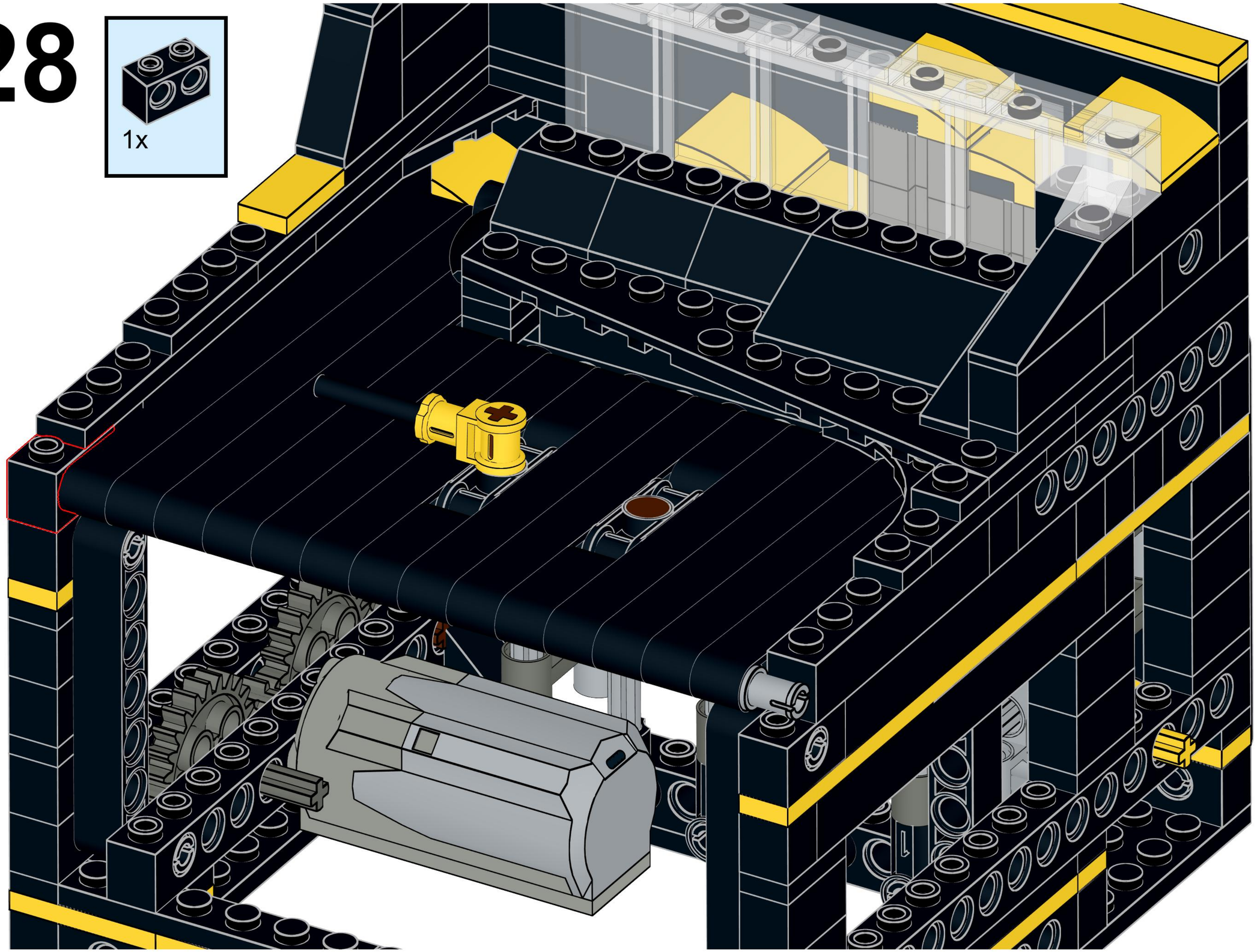

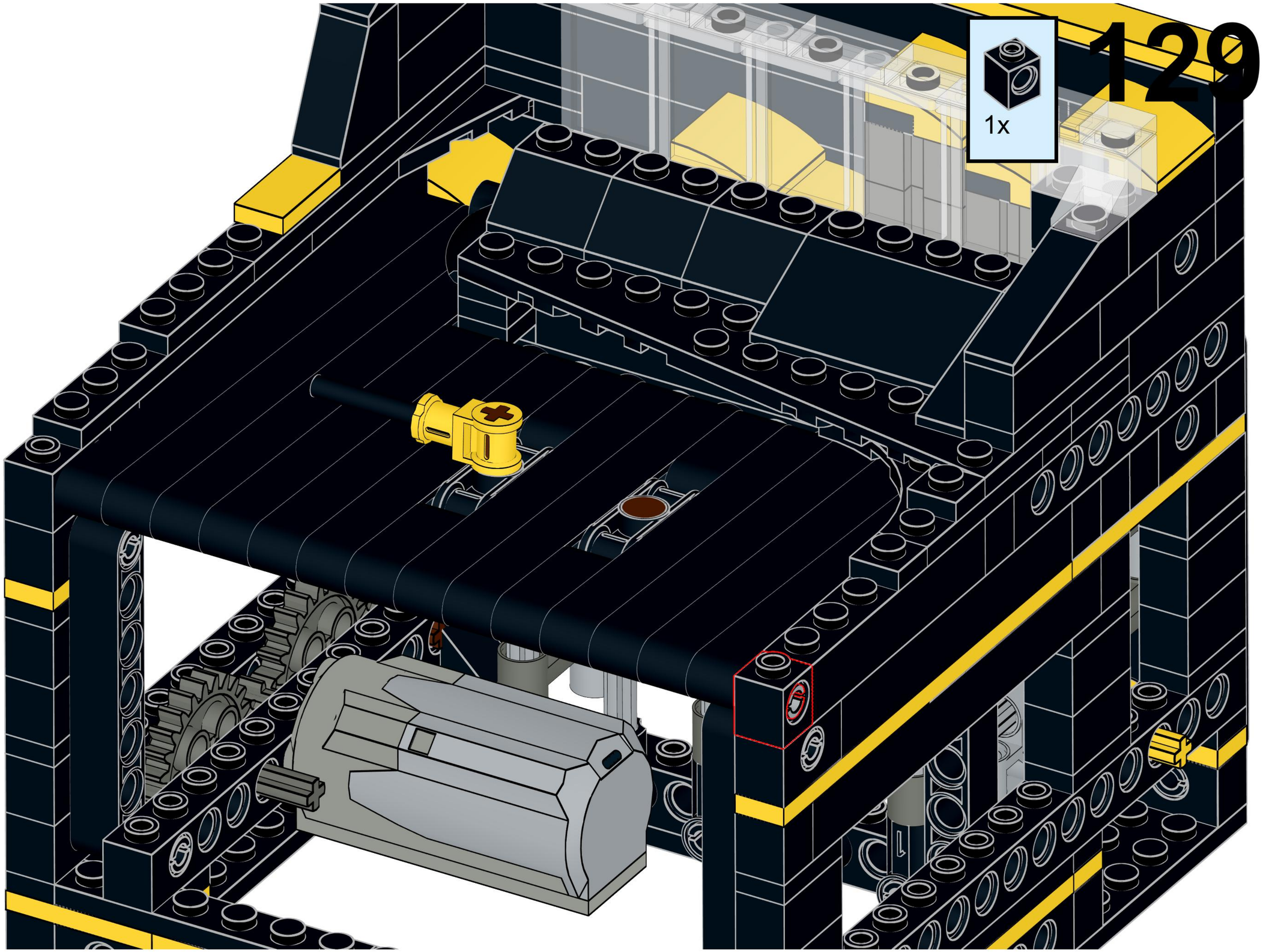
1x
129

130

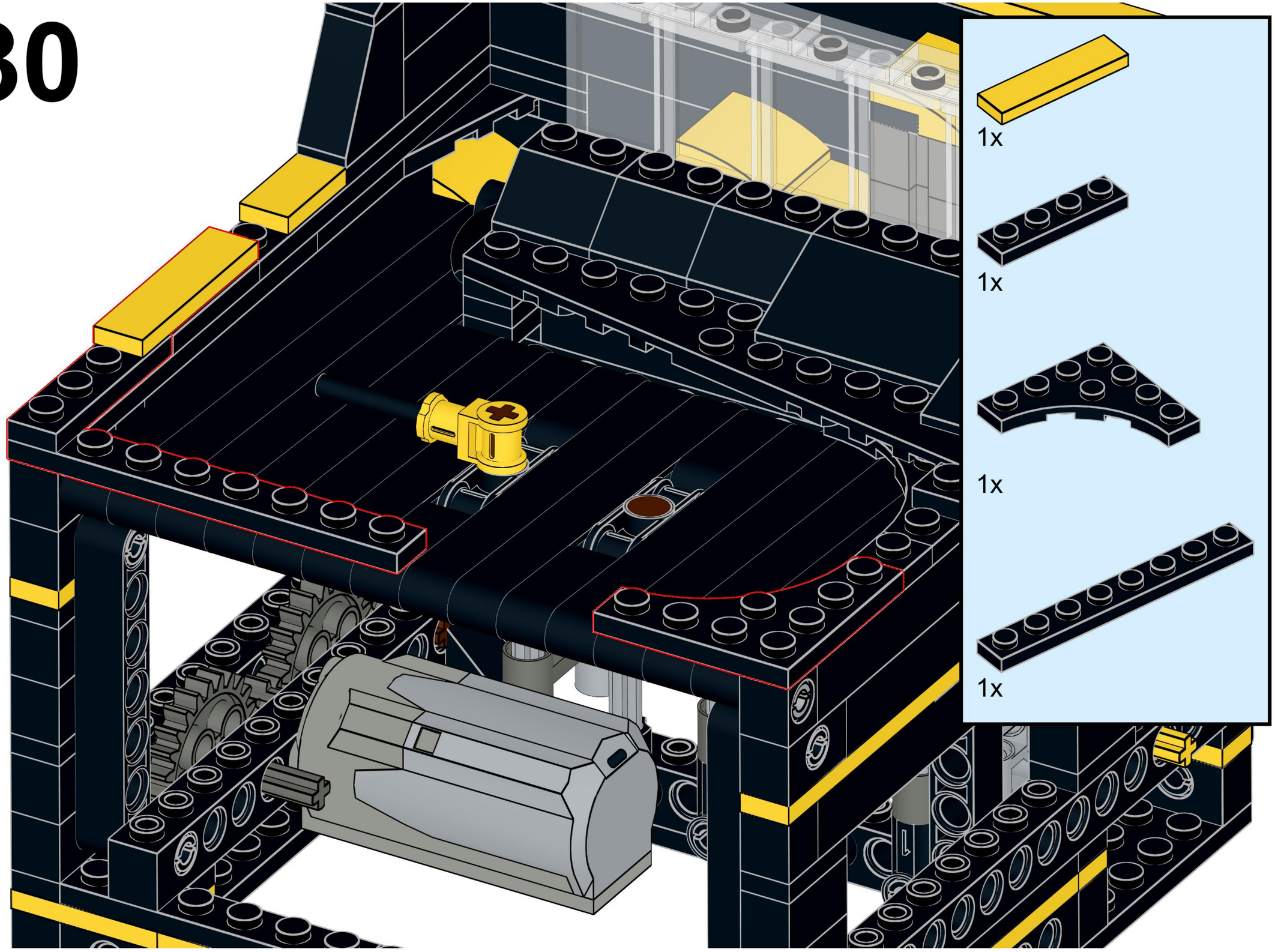

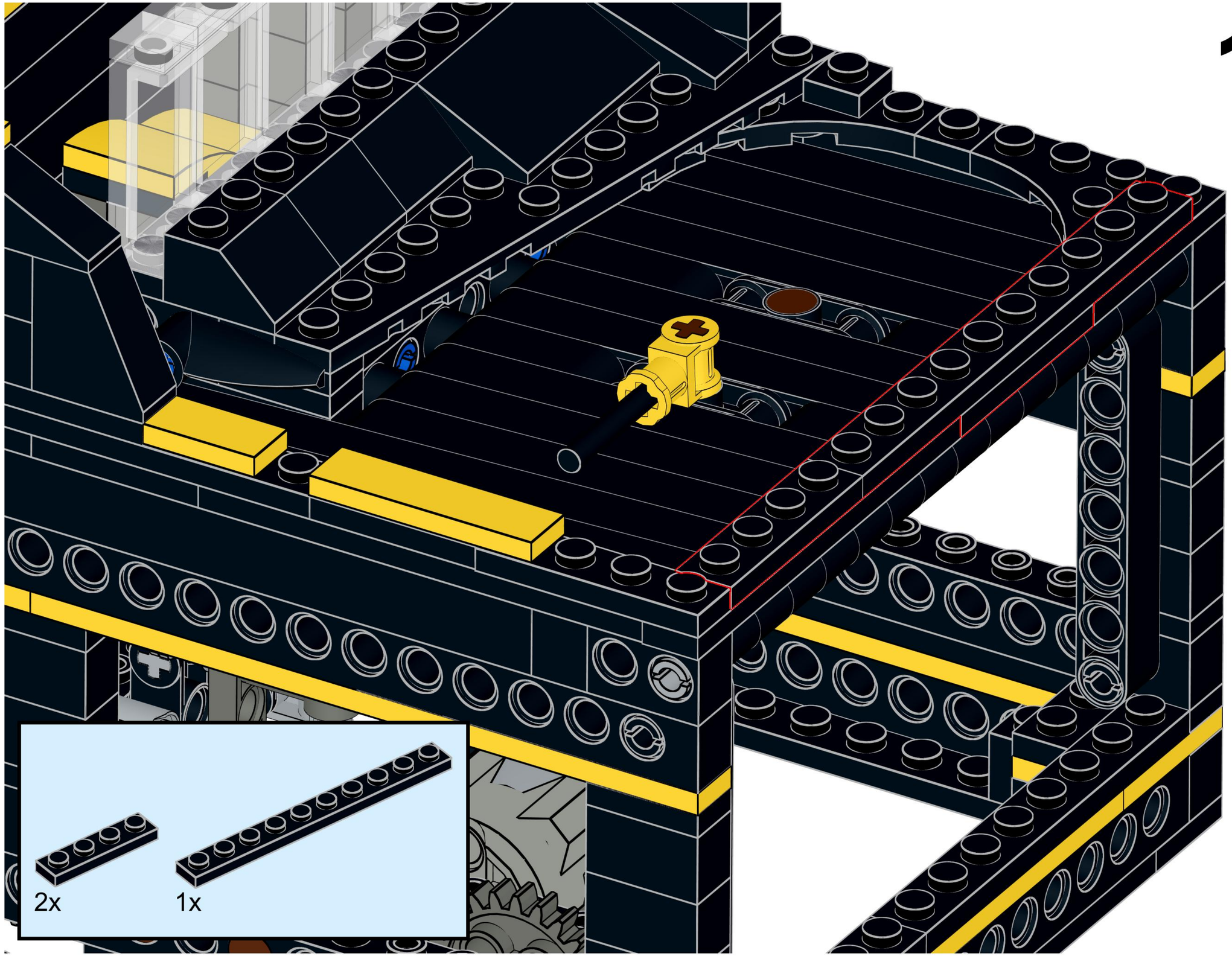
2x
1x

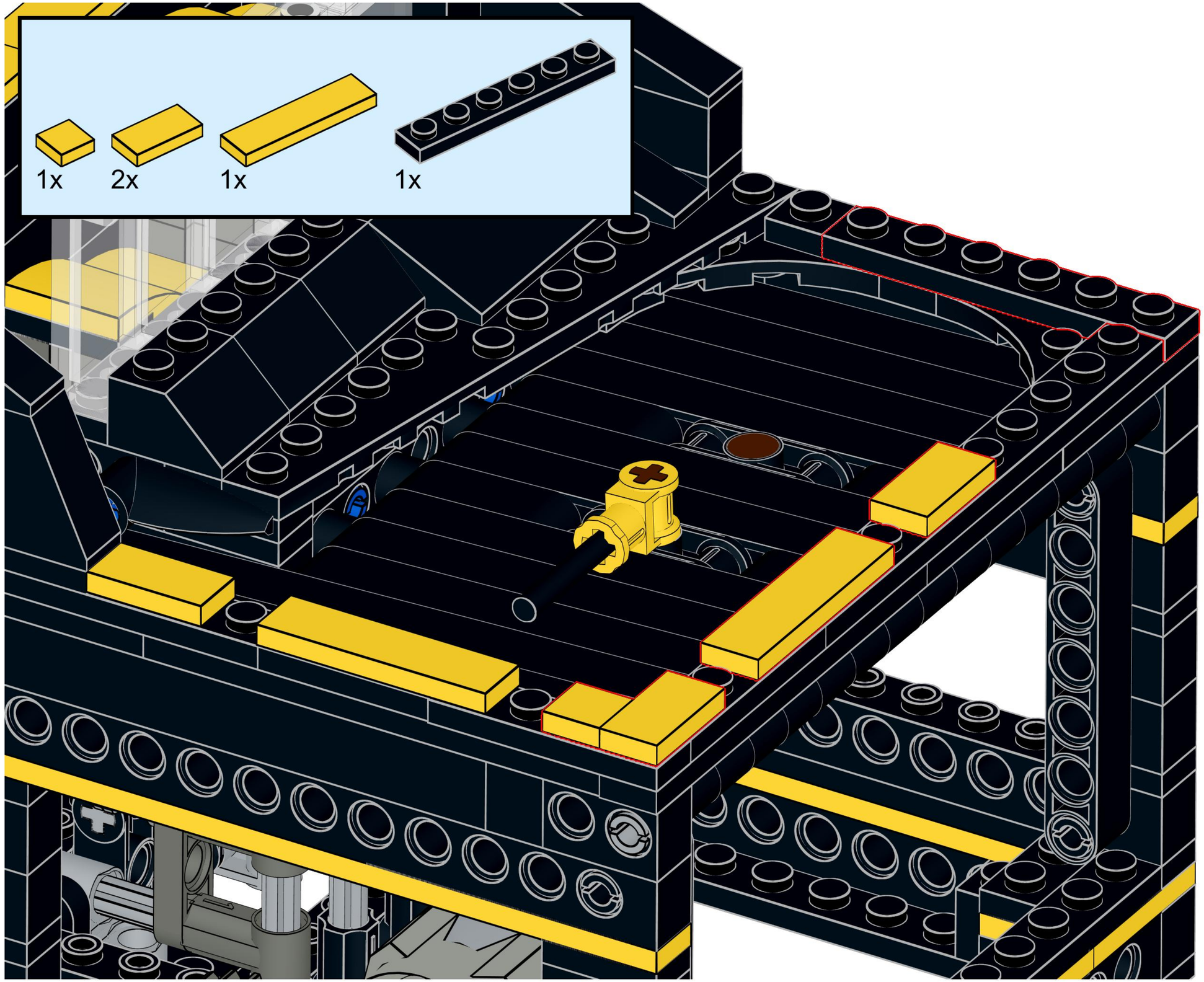
1x
2x
1x
1x

133

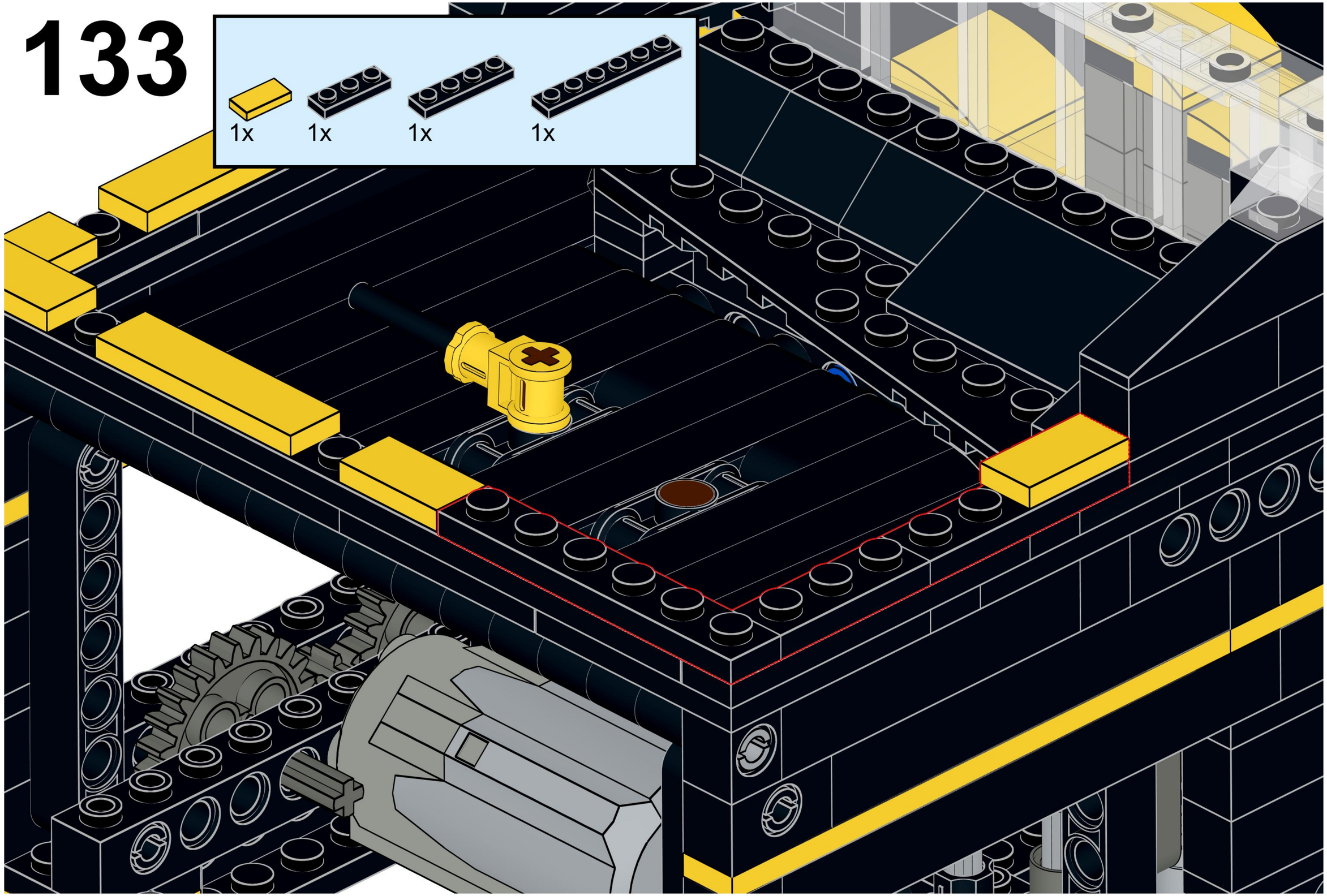

134

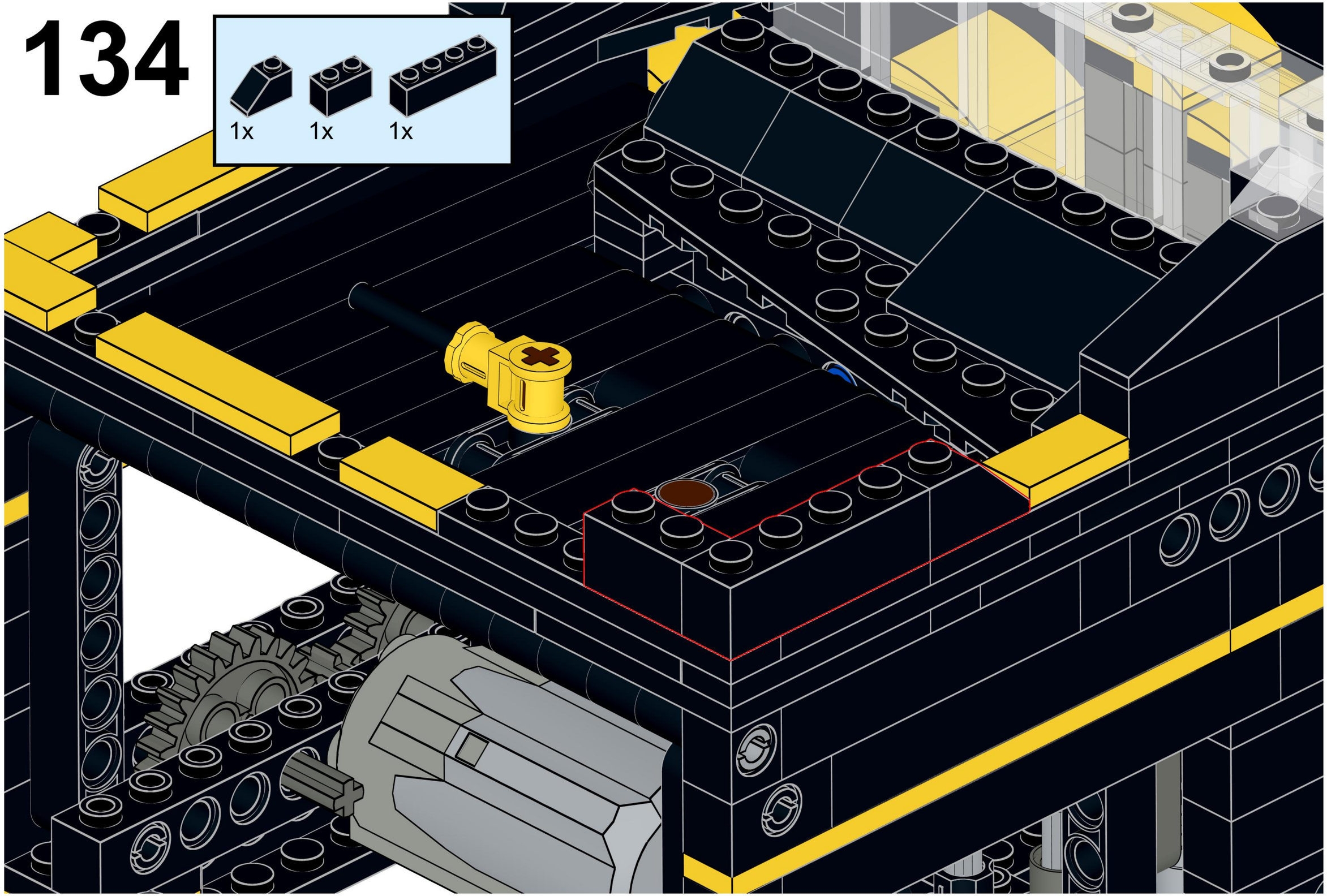

135

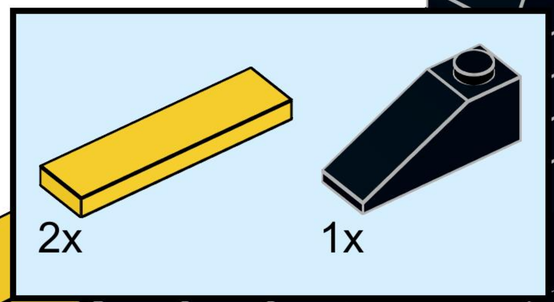

136

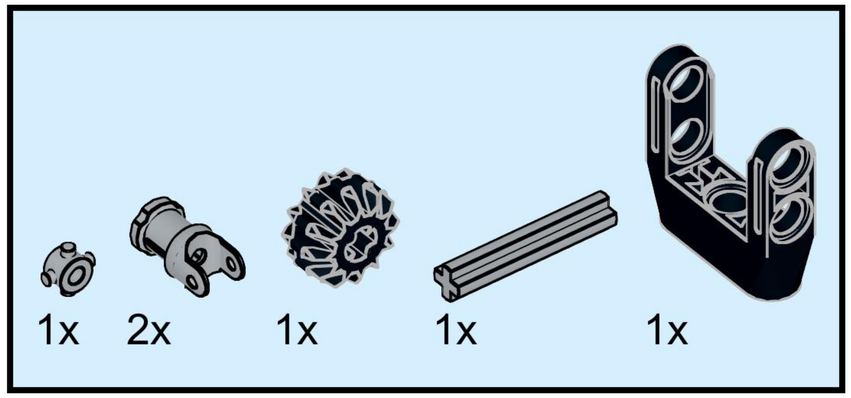

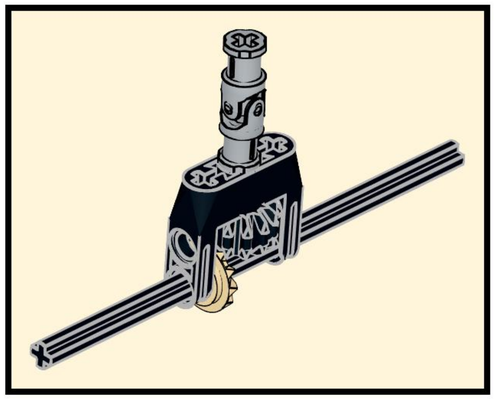

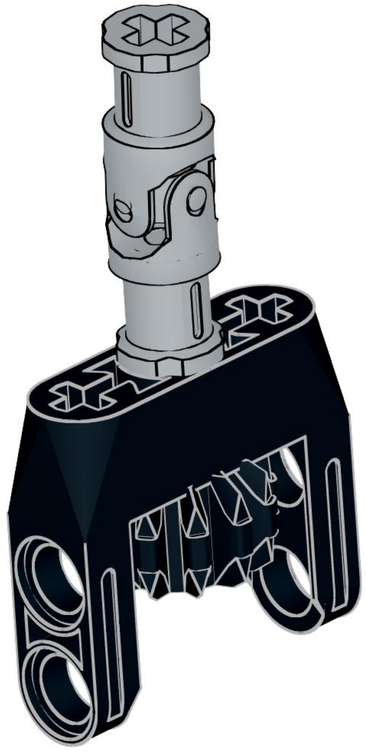

137

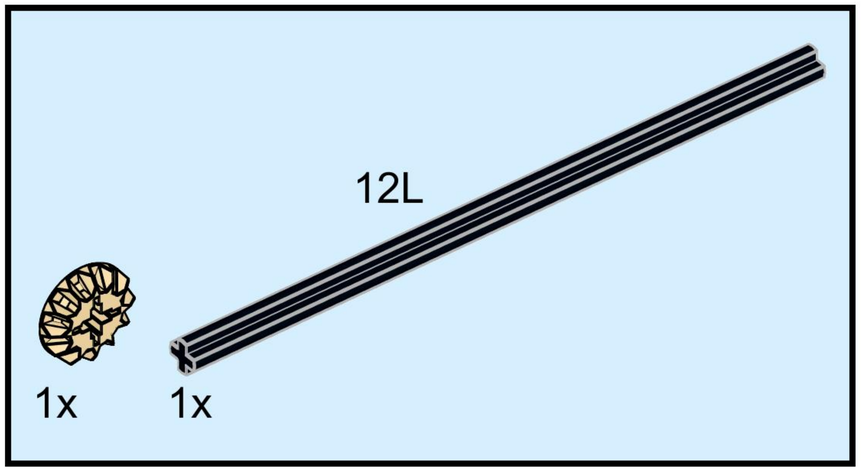

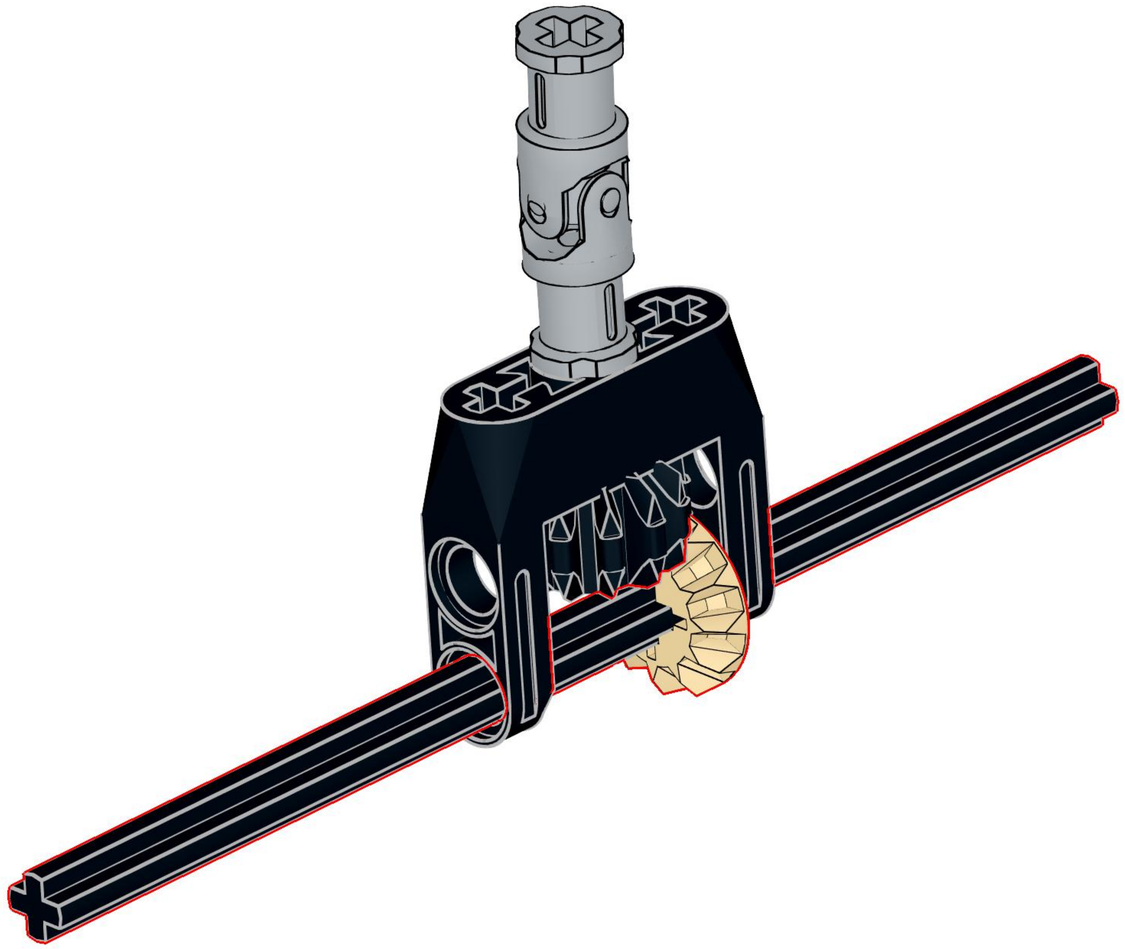

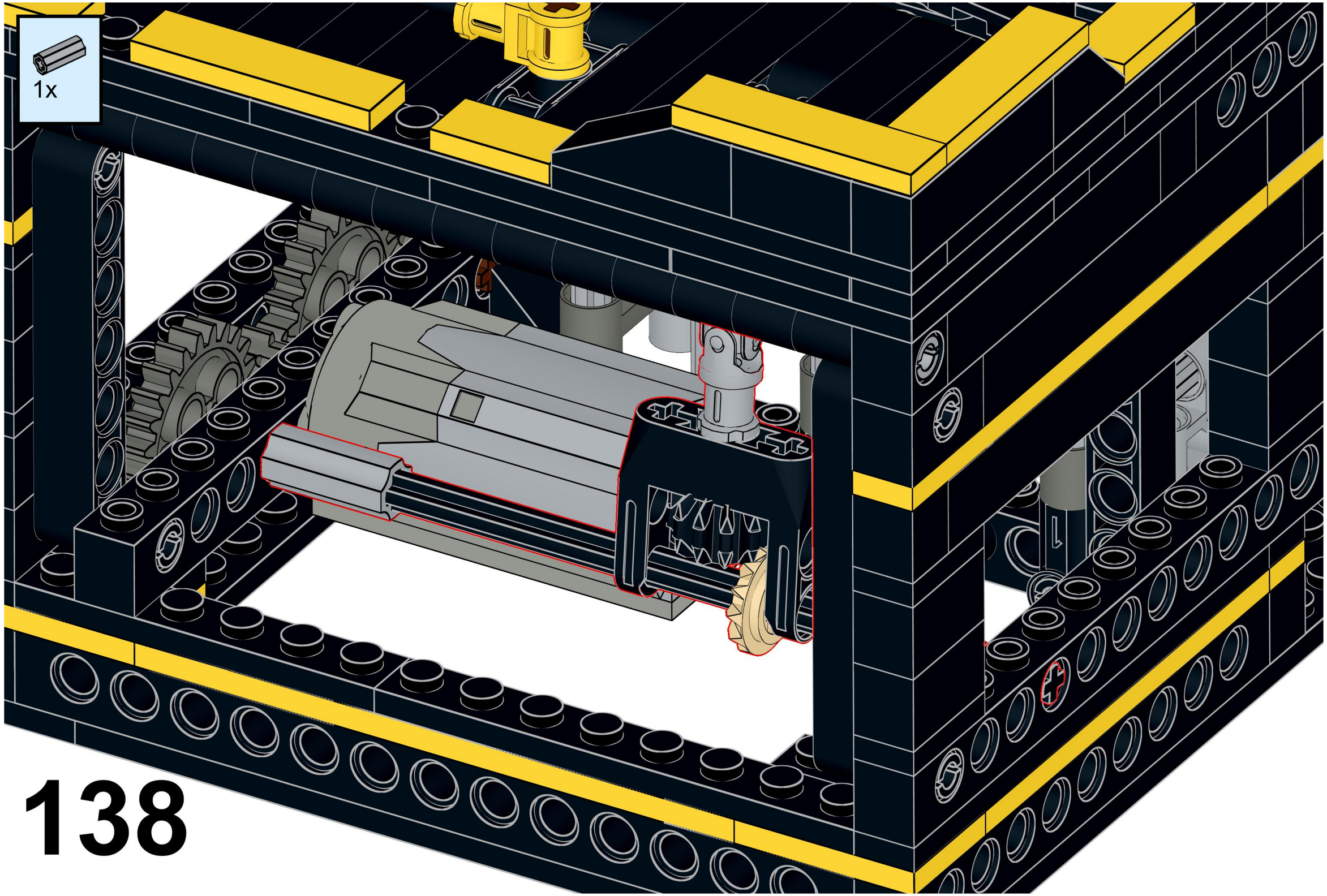

138

139

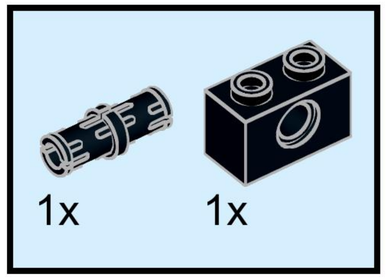

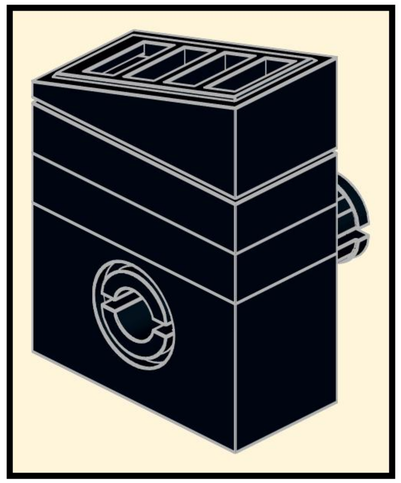

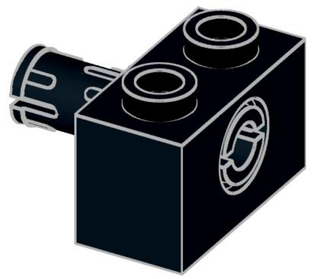

140

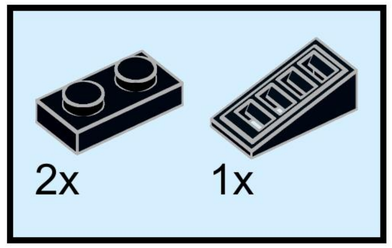

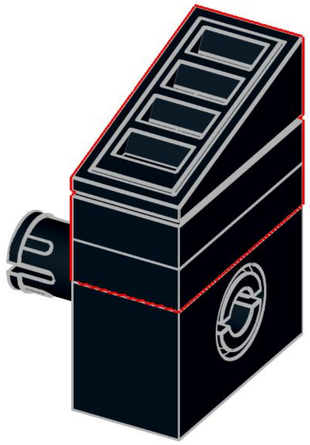

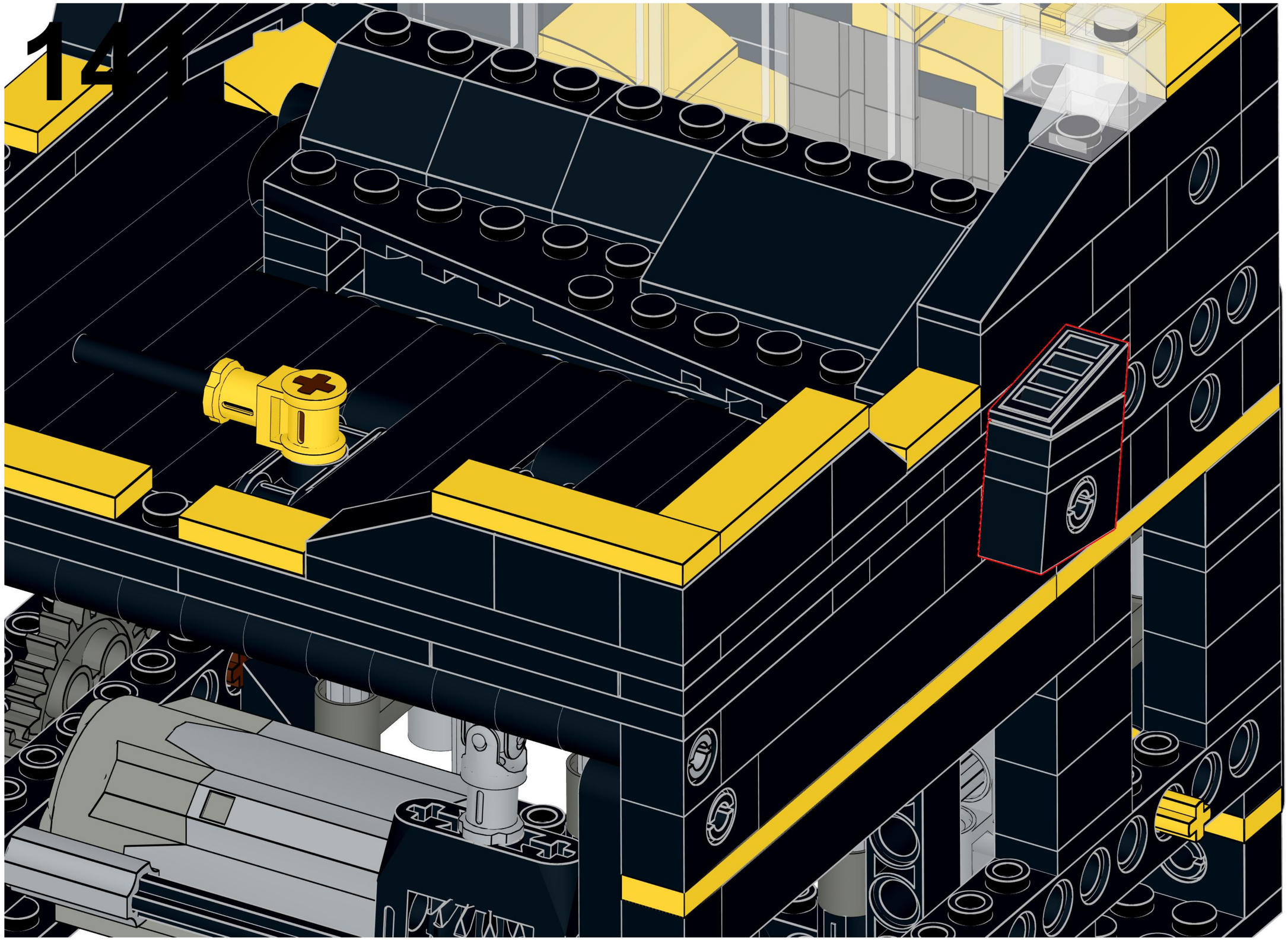
141

142

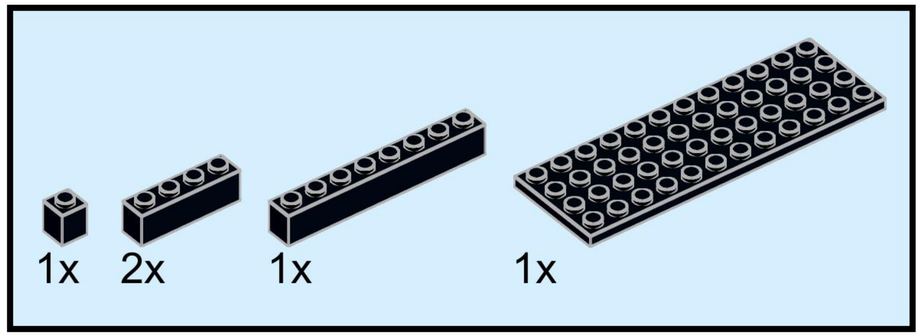

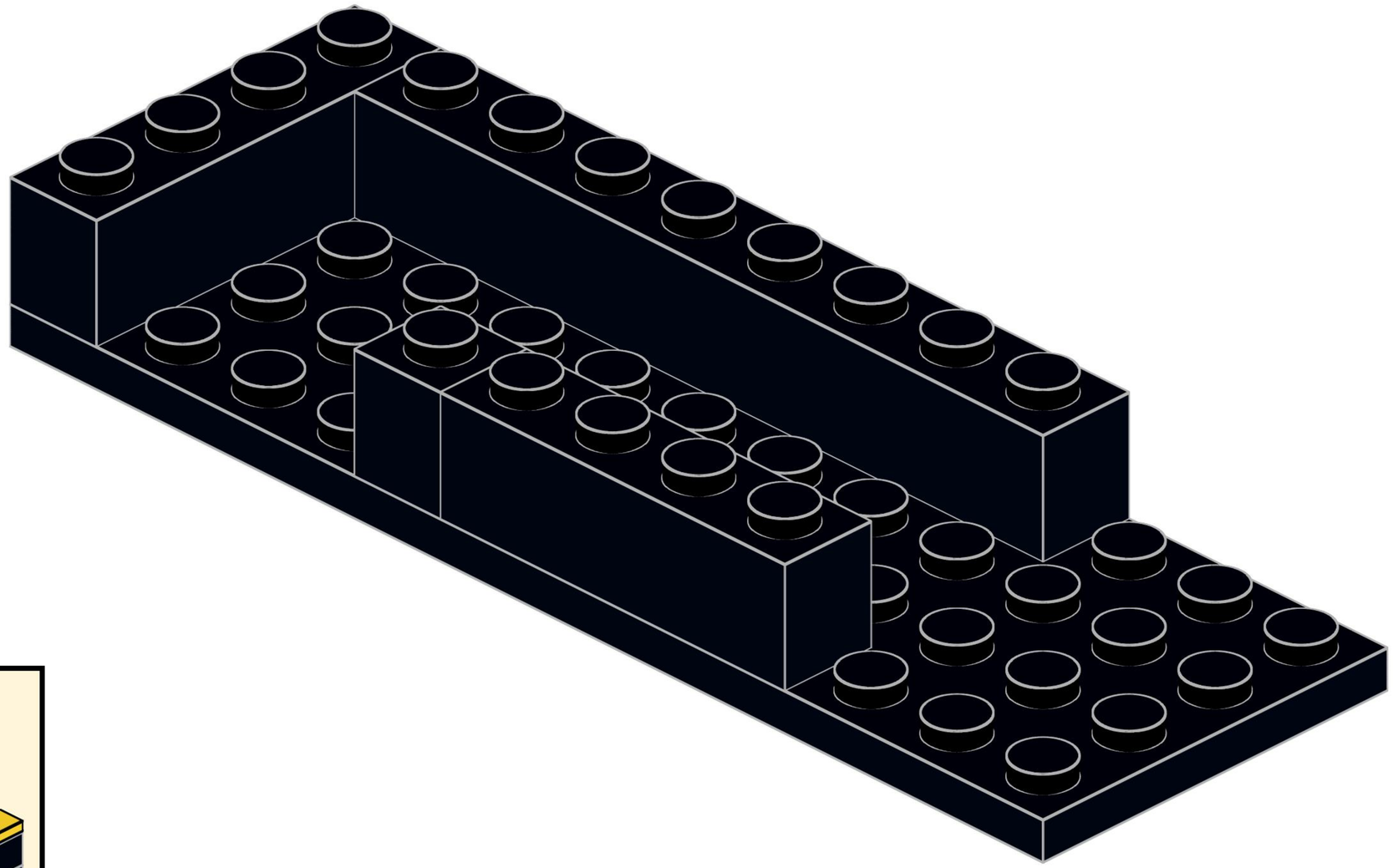

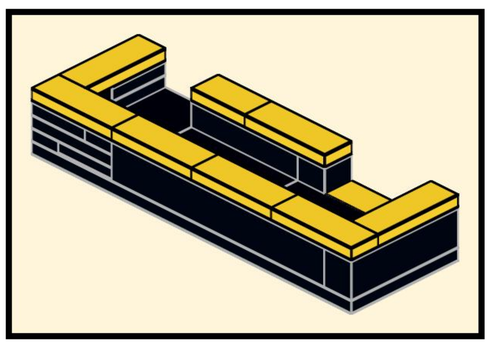

143

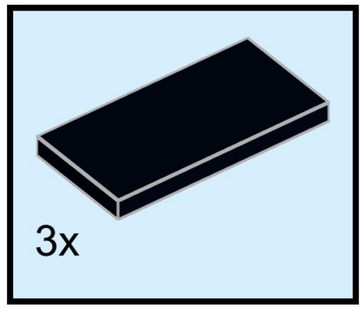

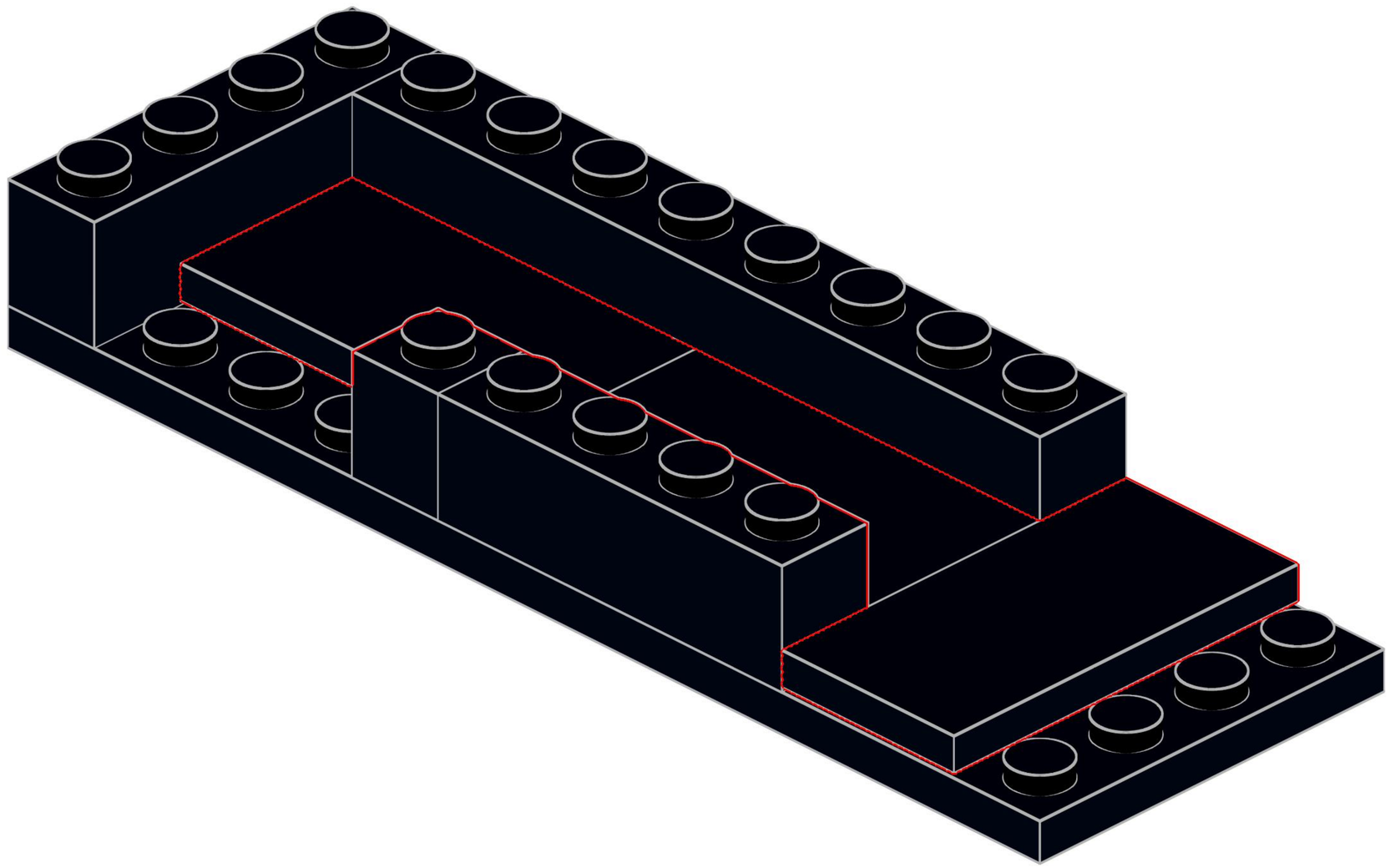

144

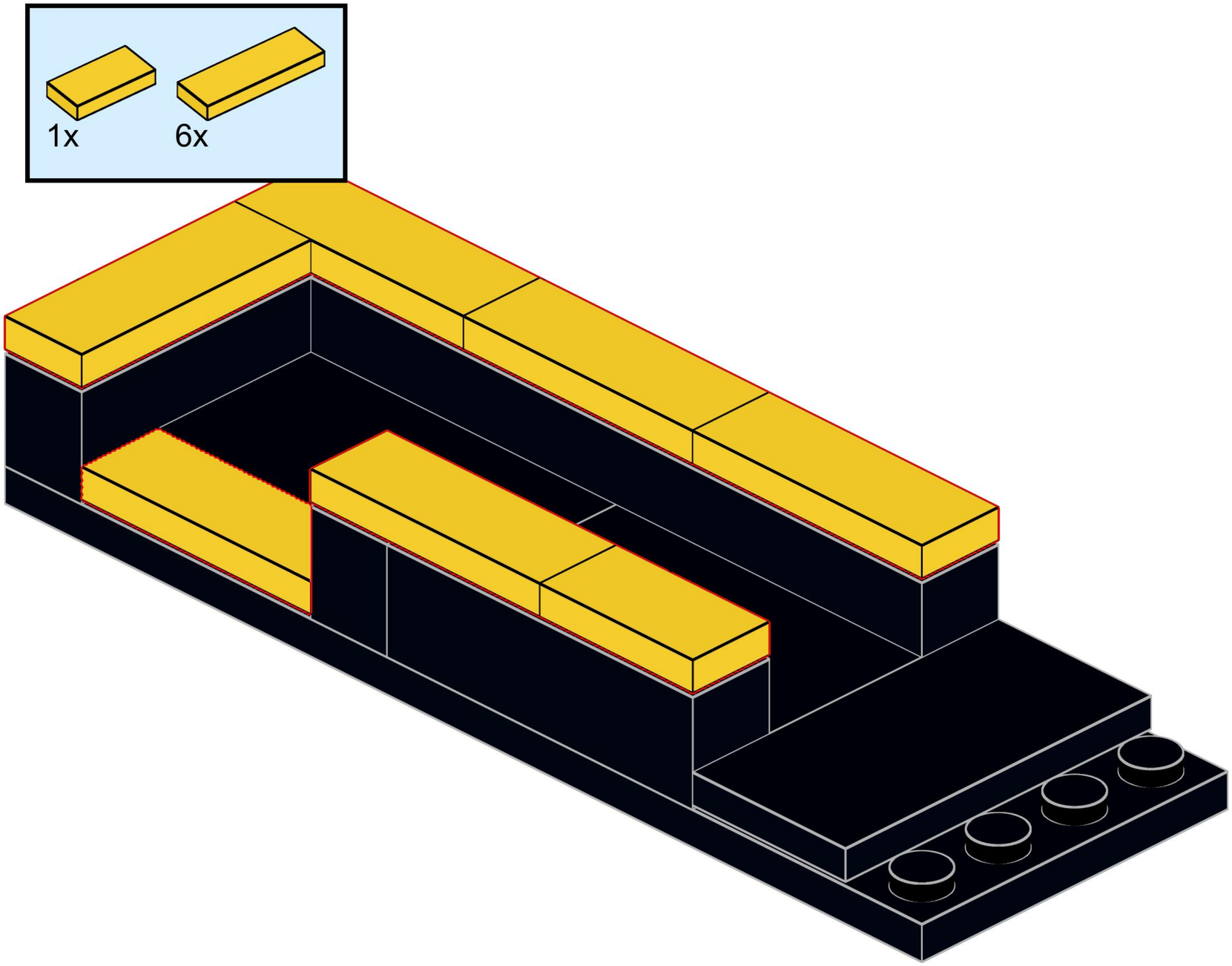

145

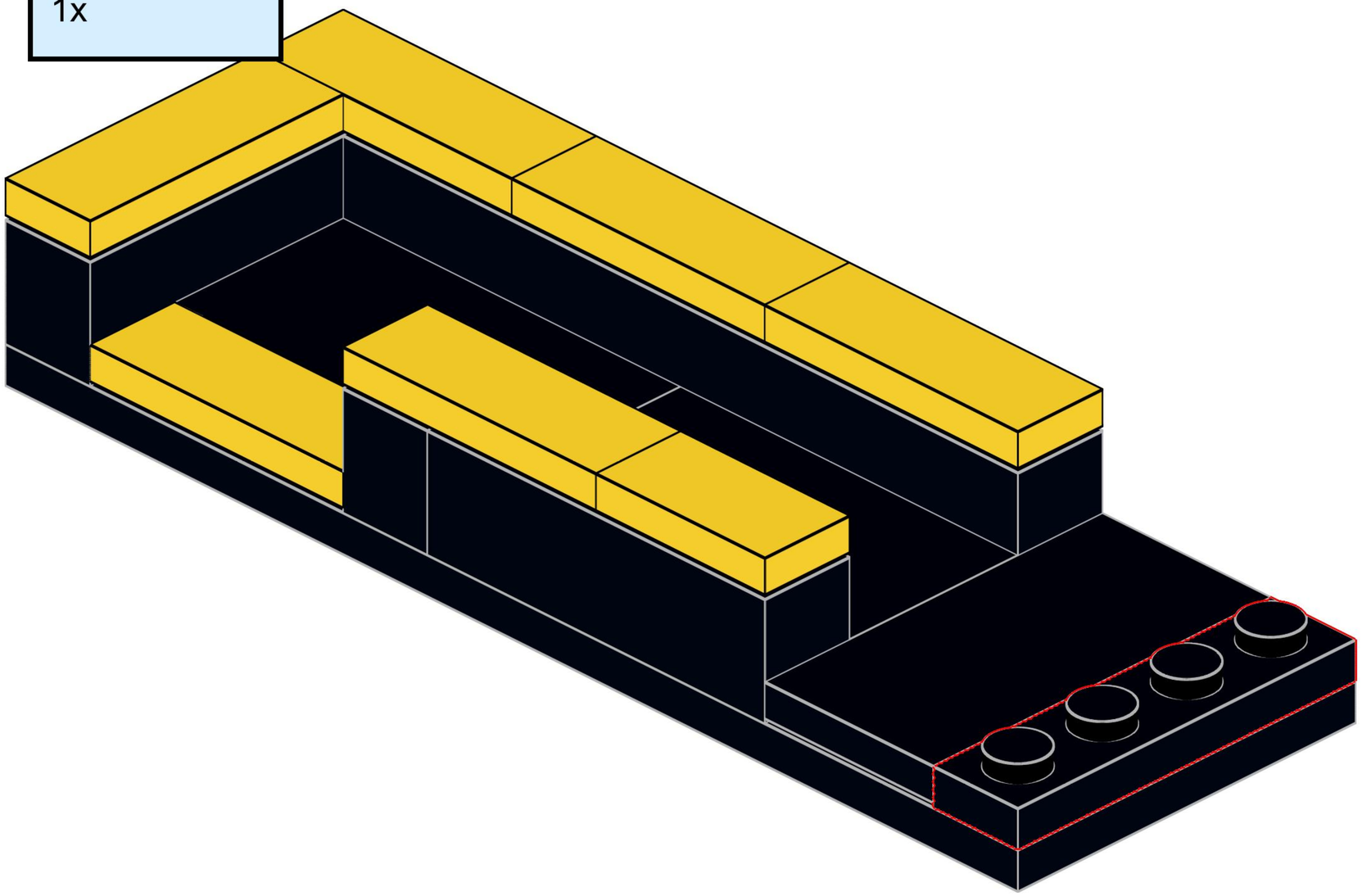

The following steps will complete this output ramp with balls returning back into the module. These parts can be installed mirrored, in the opposite direction, for an output ramp that delivers balls to the next module in a circuit.

146

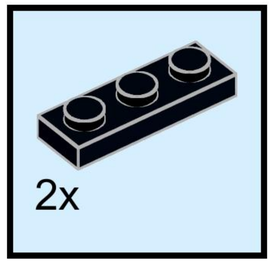

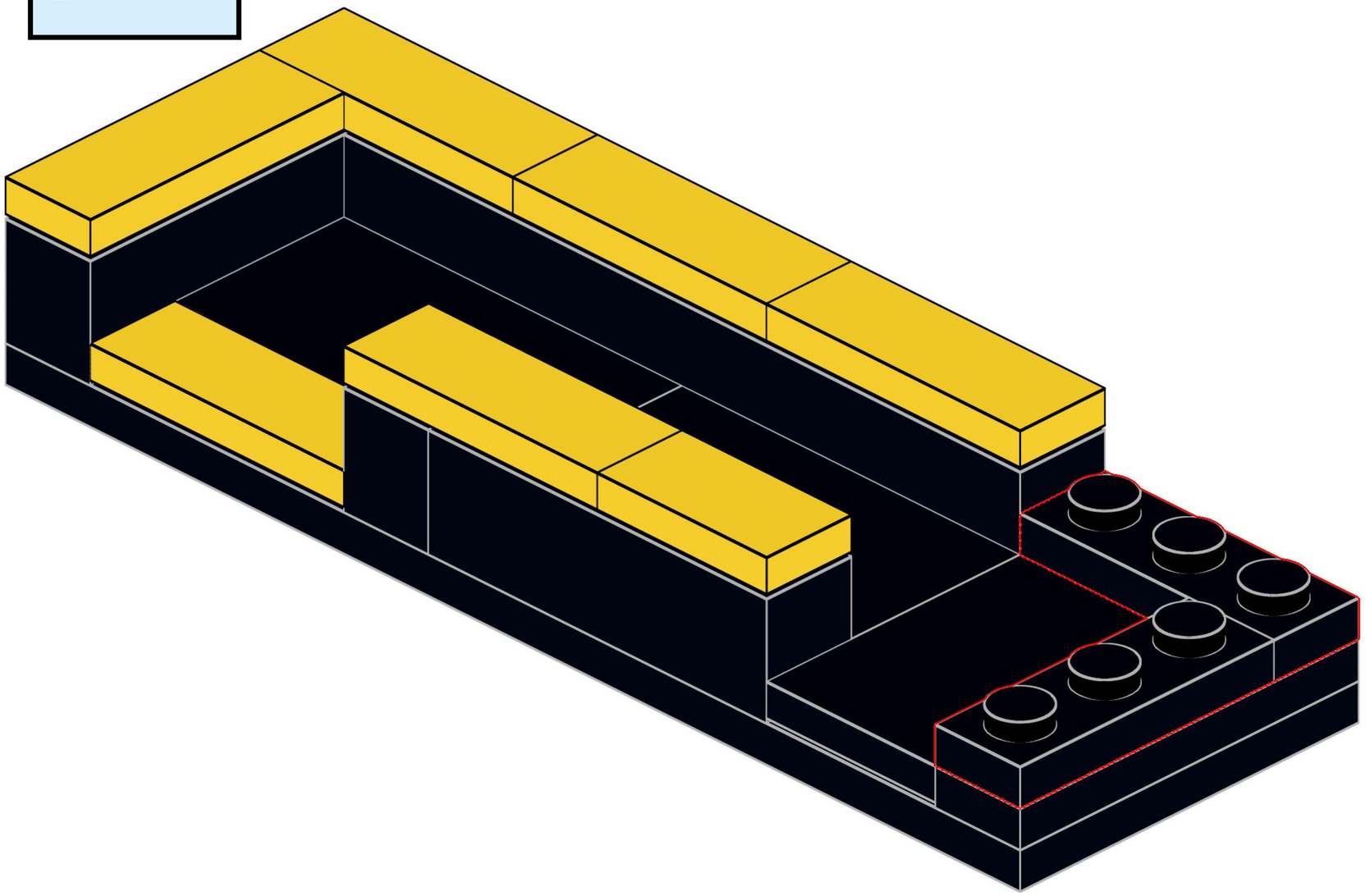

147

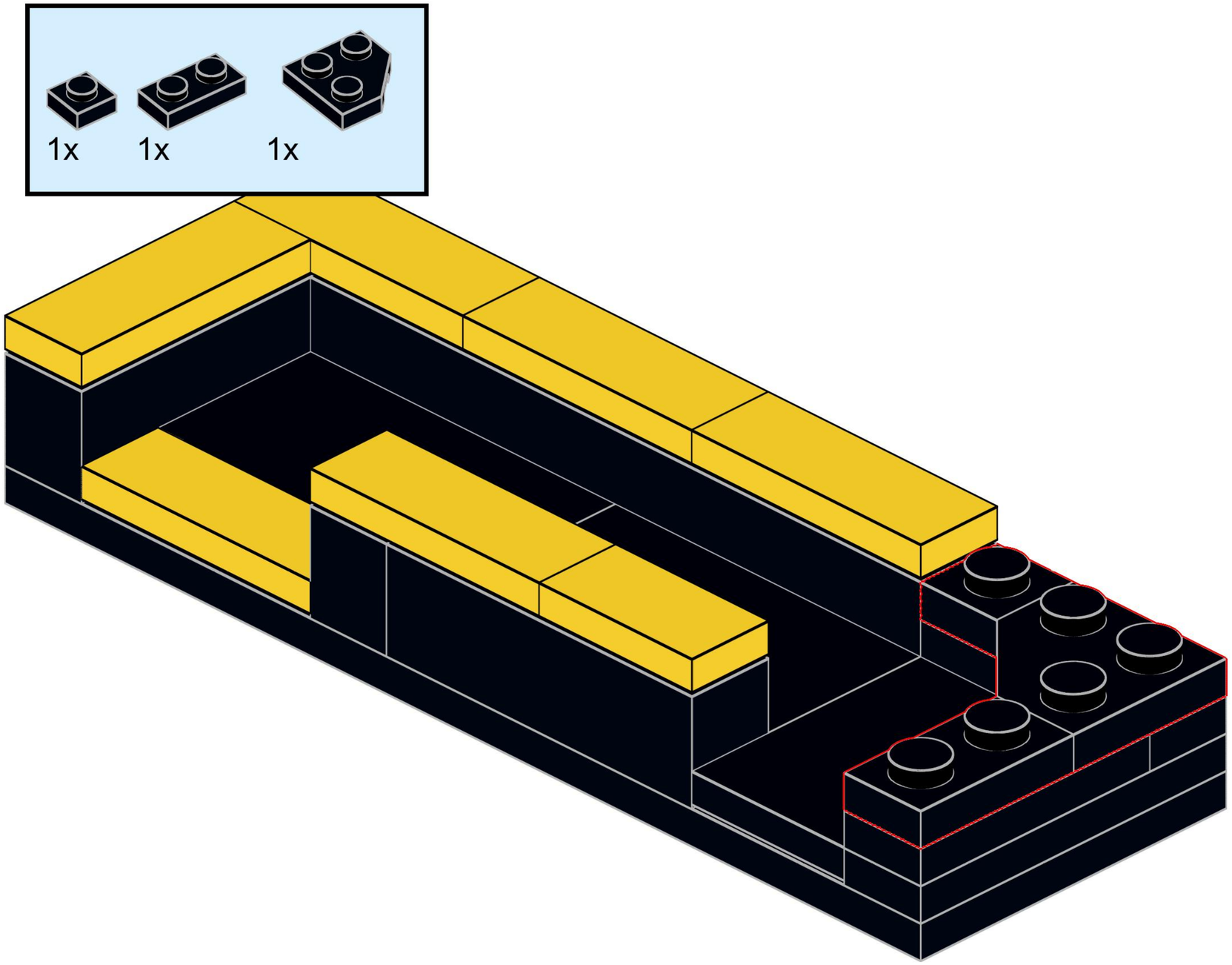

148

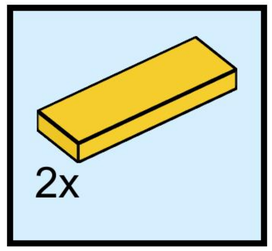

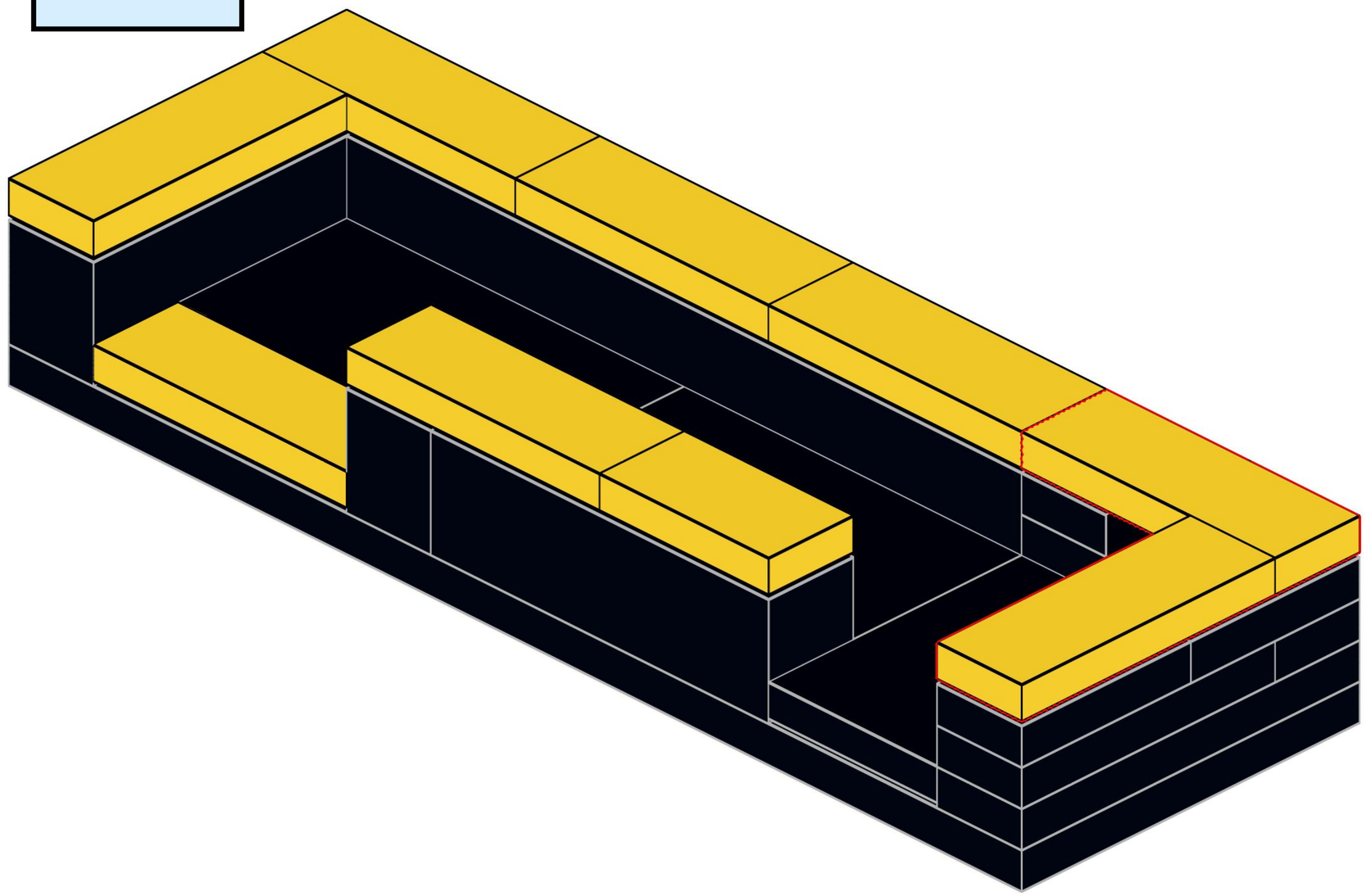

149

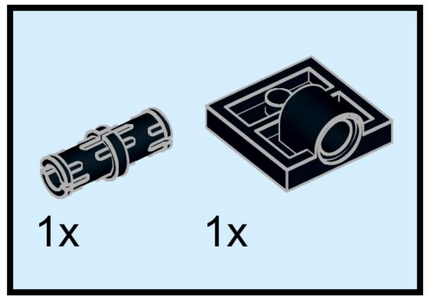

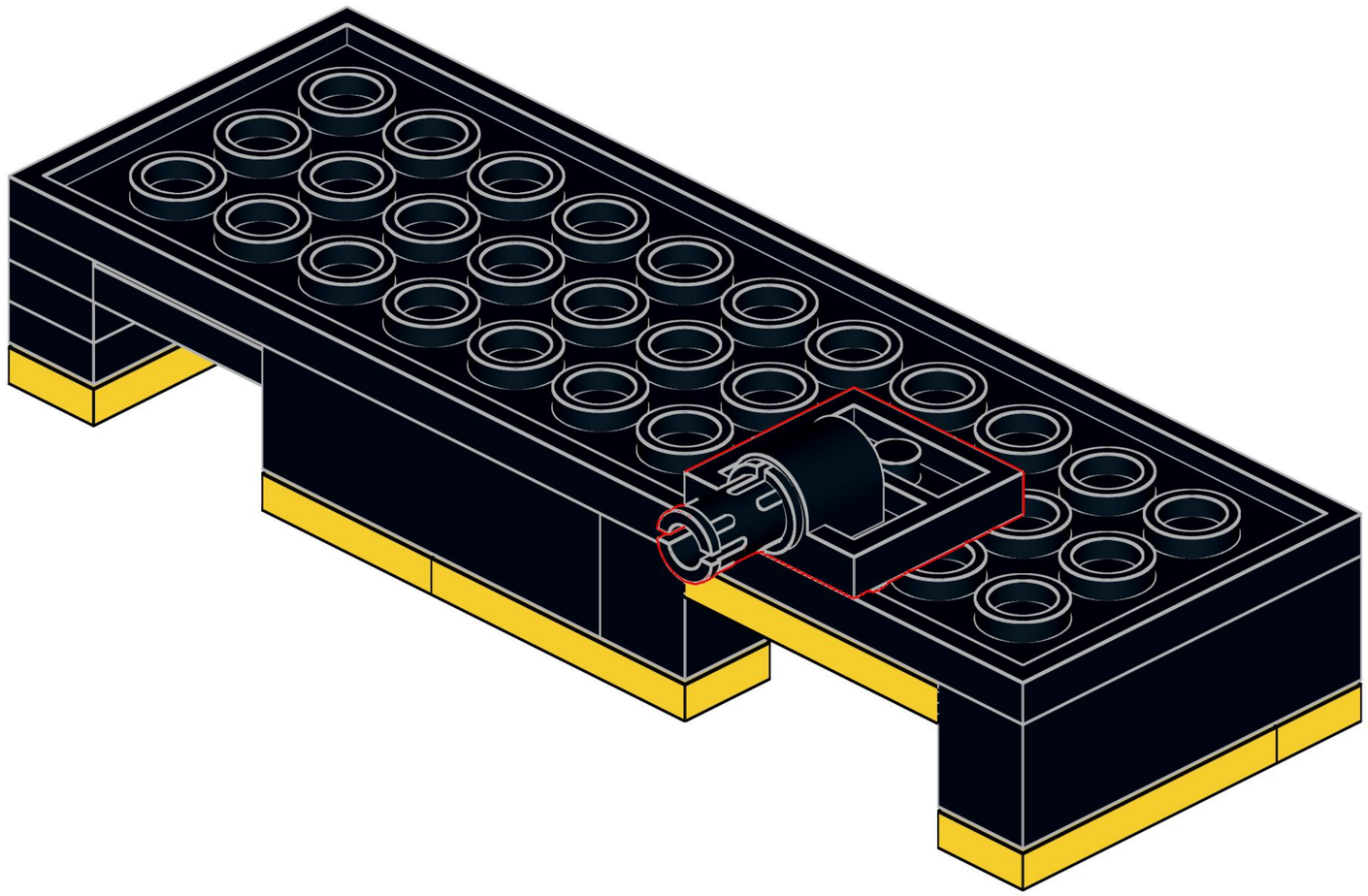

150

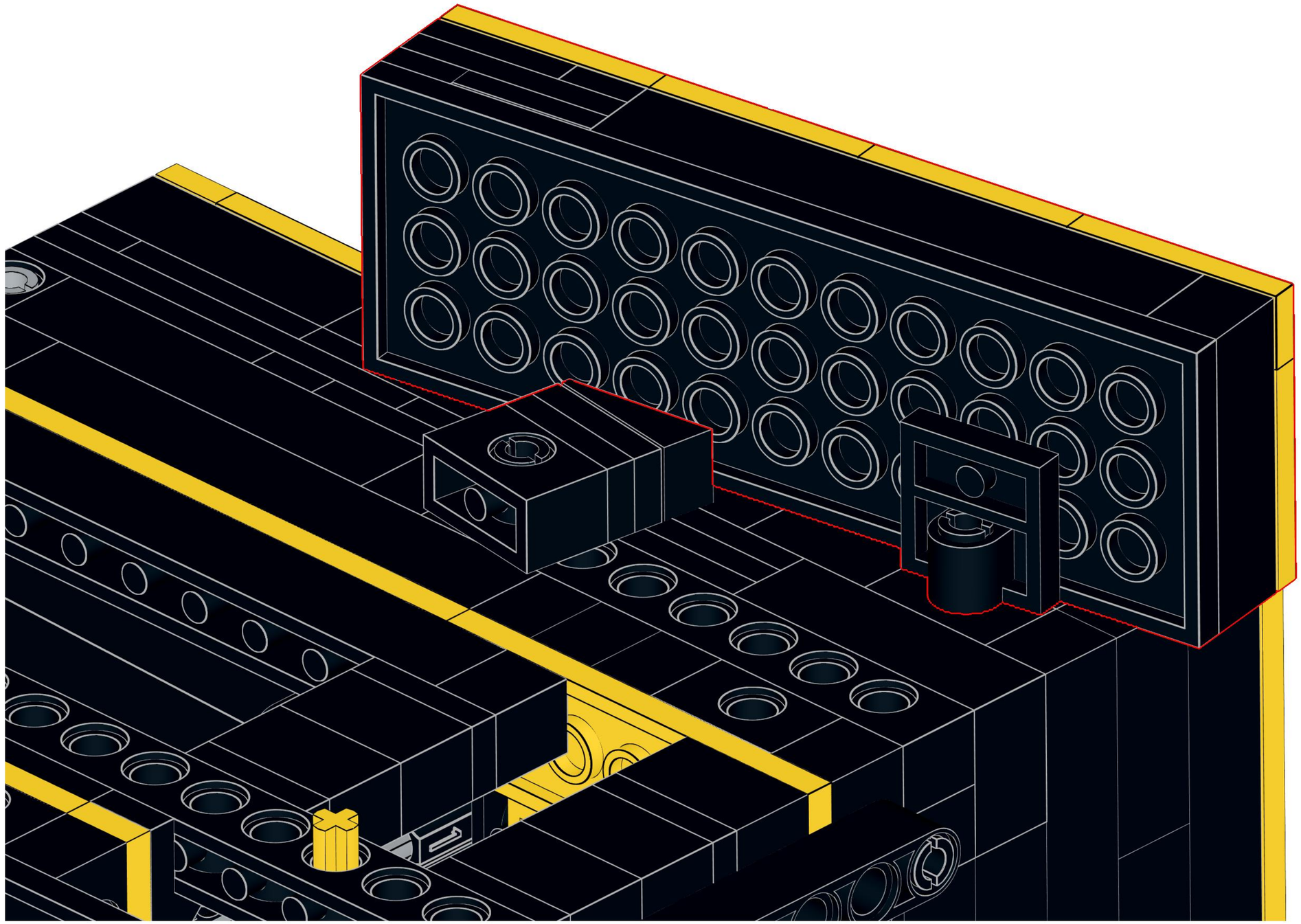

Module Revision notes

Version 1.0 - Initial Release

Version 1.1 - Updated Instructions to highlight the importance of the 2x2 Bent Cross Blocks being correctly oriented when building the crank shaft. No parts were changed. 05-Jan-19.

Version 1.2 - Changed the standard black 4L axles connected to the motor and universal joints to grey 4L axles with flat end stops.

Version 1.3 - Changed input liftarm deck and agitator drive assembly to rotate agitator in the correct direction when connected to a train controller turned Clockwise.

151

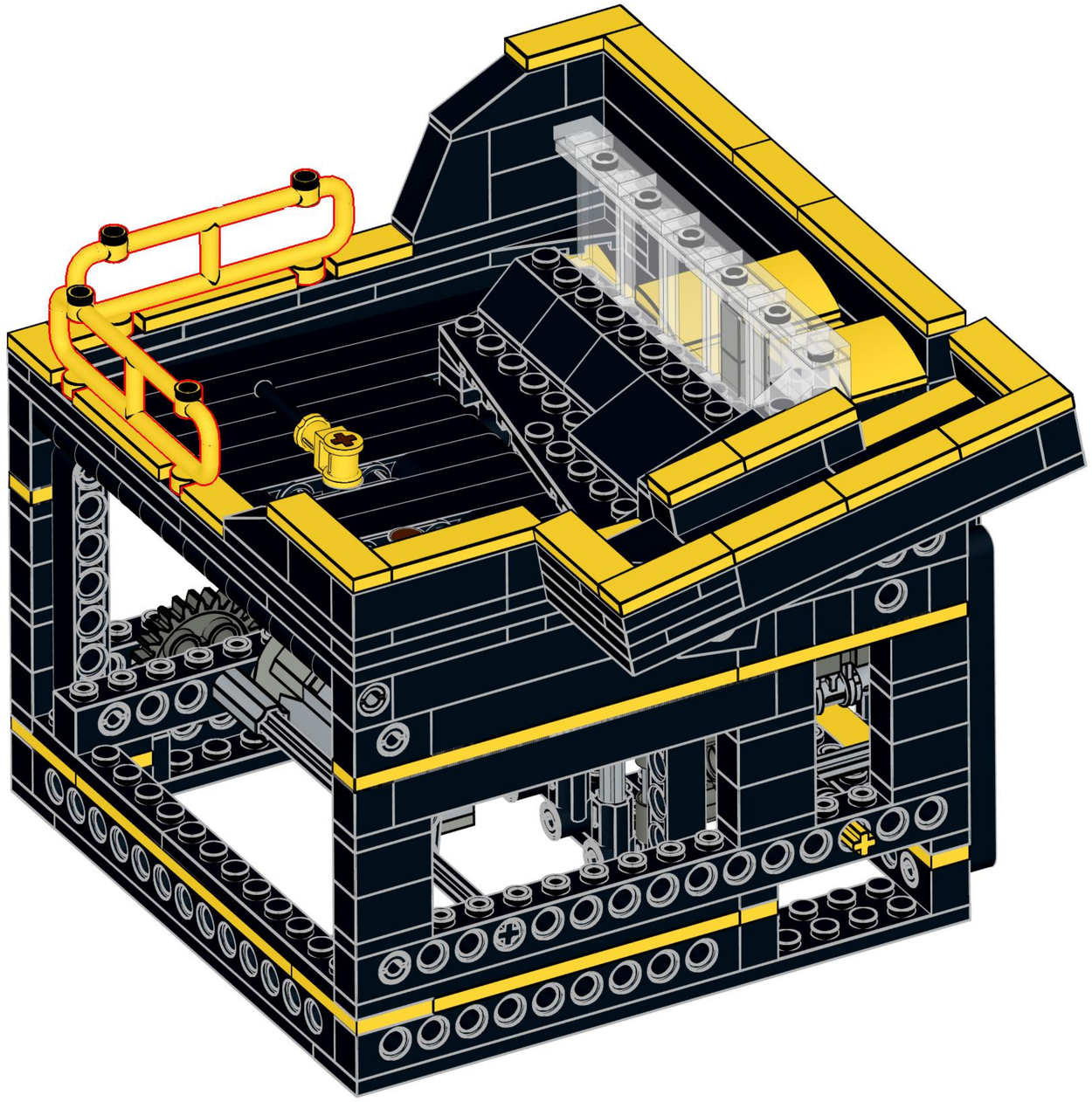

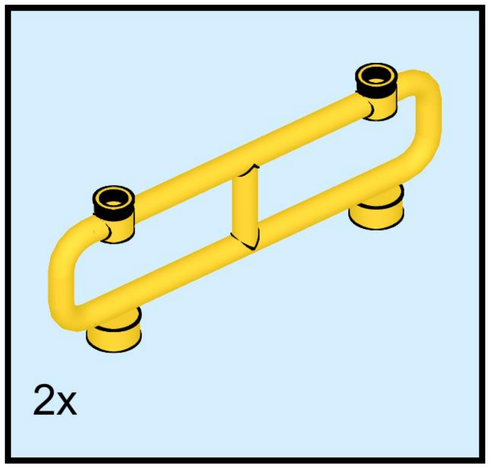

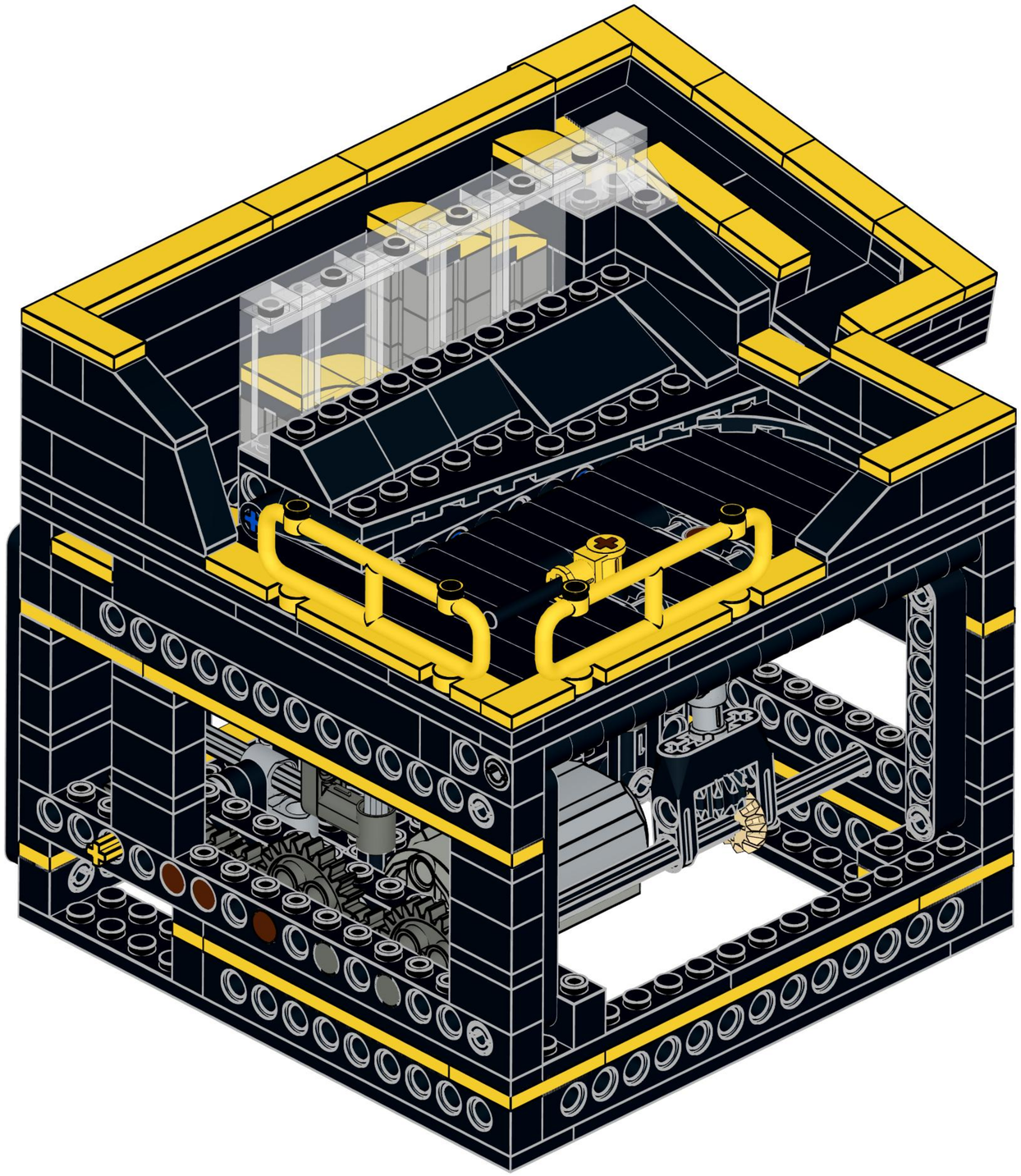

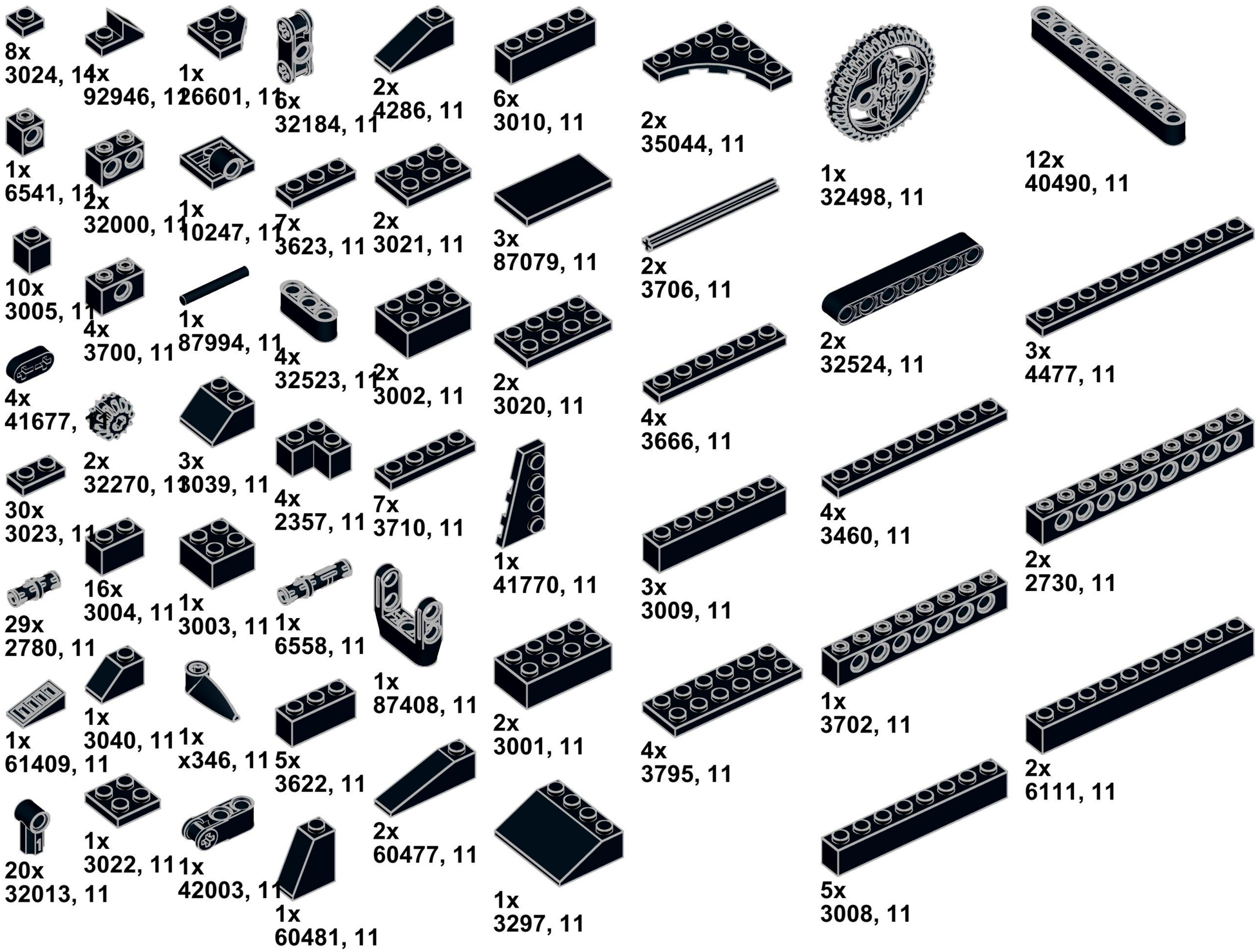
8x
3024, 14
4x
92946, 11
1x
26601, 11
6x
32184, 11
2x
4286, 11
6x
3010, 11
2x
35044, 11
1x
32498, 11
12x
40490, 11
1x
6541, 11
2x
32000, 11
1x
10247, 11
7x
3623, 11
2x
3021, 11
3x
87079, 11
2x
3706, 11
10x
3005, 11
4x
3700, 11
1x
87994, 11
4x
32523, 11
2x
3002, 11
2x
3020, 11
2x
32524, 11
3x
4477, 11
4x
41677, 11
2x
32270, 11
3x
3039, 11
4x
2357, 11
7x
3710, 11
1x
41770, 11
4x
3666, 11
4x
3460, 11
2x
2730, 11
30x
3023, 11
16x
3004, 11
1x
3003, 11
29x
2780, 11
1x
6558, 11
1x
87408, 11
3009, 11
1x
61409, 11
1x
3040, 11
1x
x346, 11
5x
3622, 11
2x
3001, 11
4x
3795, 11
1x
3702, 11
2x
6111, 11
20x
32013, 11
1x
3022, 11
1x
42003, 11
1x
60481, 11
2x
60477, 11
1x
3297, 11
5x
3008, 11

1x
3708, 11

1x
6112, 11

3x
3895, 11

1x
2445, 11

1x
47397, 11

1x
3029, 11

3x
41239, 11

2x
32018, 11

2x
2465, 11

6x
3703, 11

2x
4282, 11

3x
10928, 85

20x
32013, 85

10x
6632, 85

20x
90258, 85

2x
87083, 85

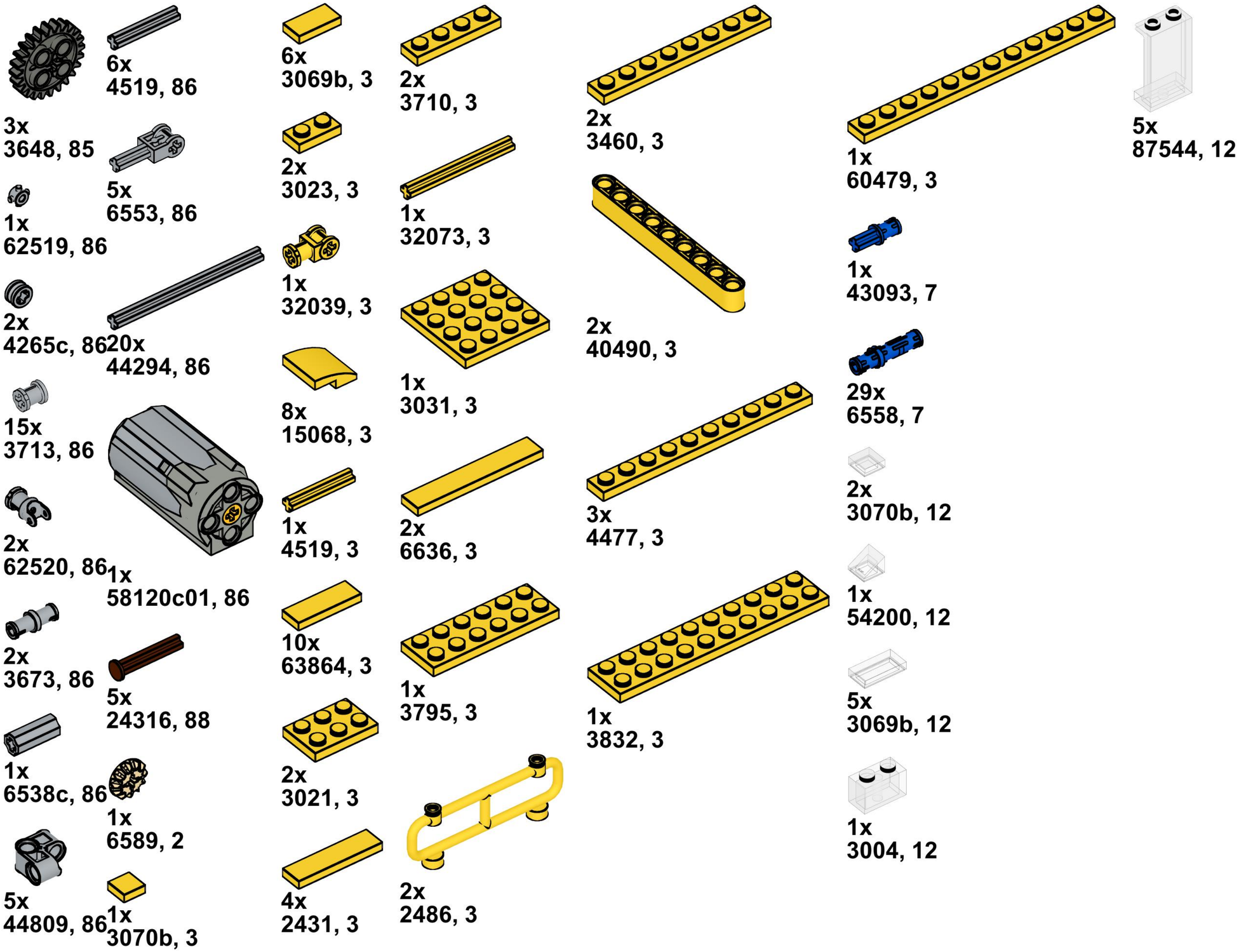
3x
3648, 85
6x
4519, 86
1x
62519, 86
5x
6553, 86
2x
4265c, 86
20x
44294, 86
15x
3713, 86
2x
62520, 86
1x
58120c01, 86
2x
3673, 86
5x
24316, 88
1x
6538c, 86
1x
6589, 2
5x
44809, 86
1x
3070b, 3
6x
3069b, 3
2x
3023, 3
1x
32039, 3
8x
15068, 3
1x
4519, 3
10x
63864, 3
2x
3021, 3
4x
2431, 3
2x
3710, 3
1x
32073, 3
1x
3031, 3
2x
6636, 3
1x
3795, 3
2x
2486, 3
2x
3460, 3
2x
40490, 3
3x
4477, 3
1x
3832, 3
1x
60479, 3
1x
43093, 7
29x
6558, 7
2x
3070b, 12
1x
54200, 12
5x
3069b, 12
1x
3004, 12
5x
87544, 12