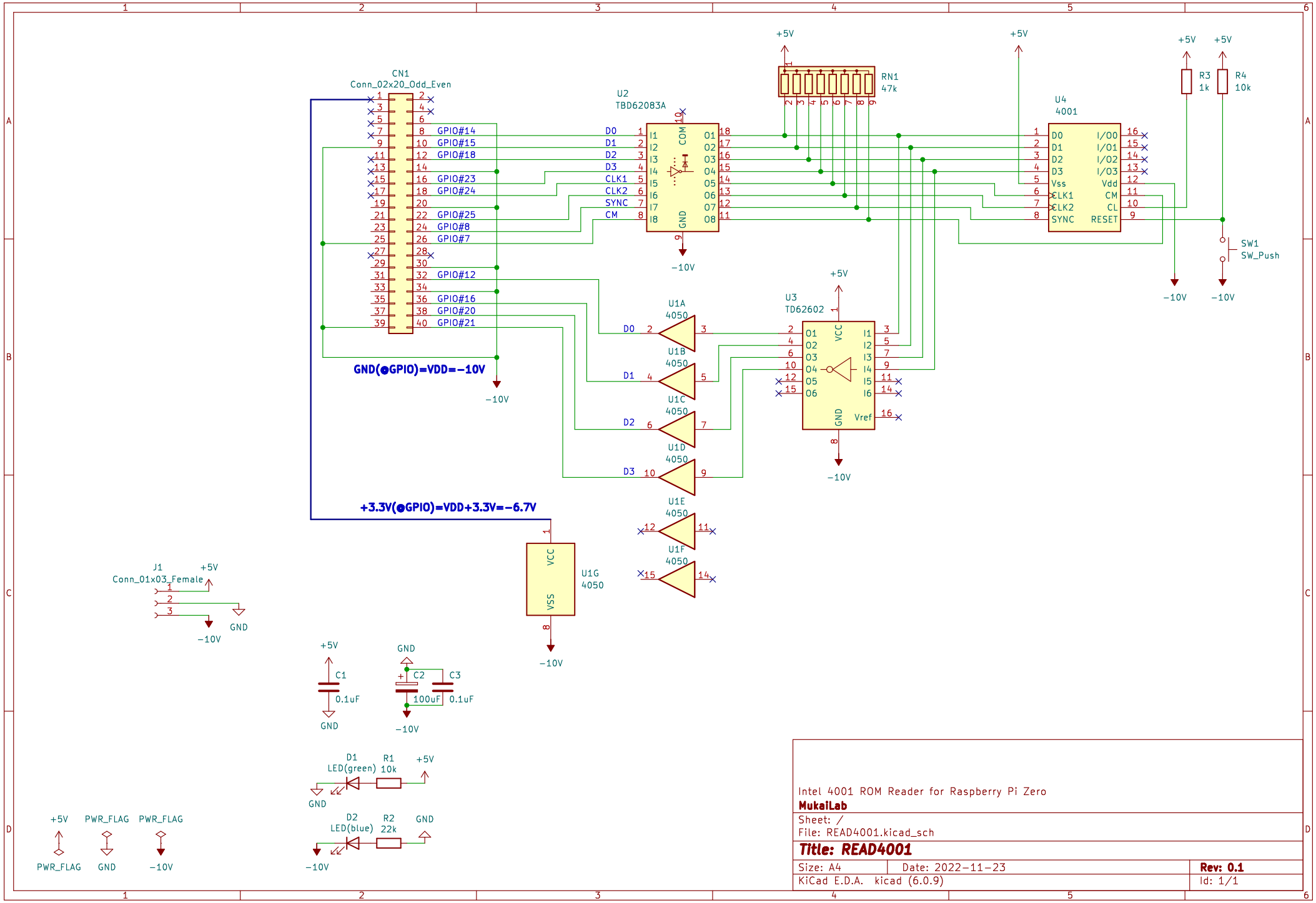

Intel 4001 ROM Reader for Raspberry Pi Zero

MukaiLab

Sheet: /

File: READ4001.kicad_sch

Title: READ4001

Size: A4	Date: 2022-11-23	**Rev: 0.1**
KiCad E.D.A. kicad (6.0.9)		Id: 1/1