USB-to-Serial Converter

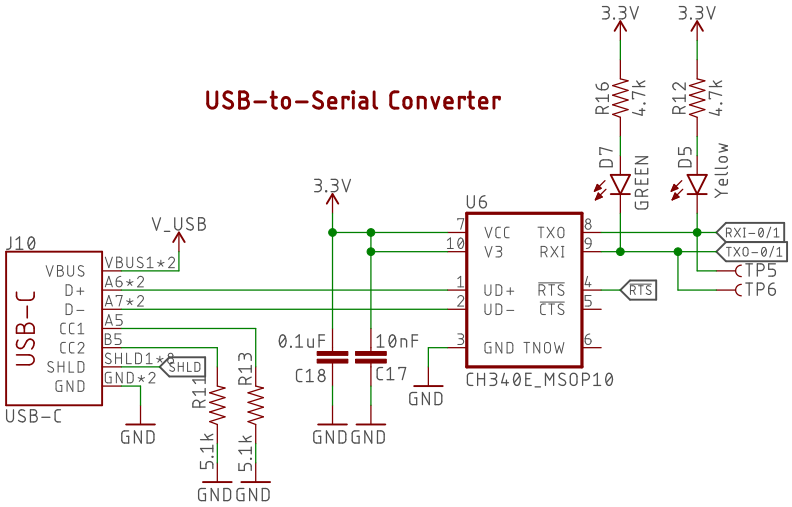

I2C/Qwiic

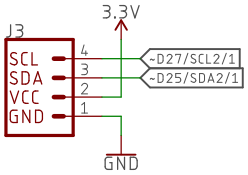

Bootloader Reset Circuit

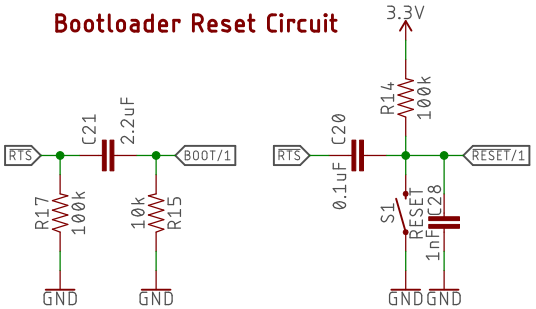

User LED

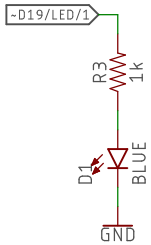

Microphone

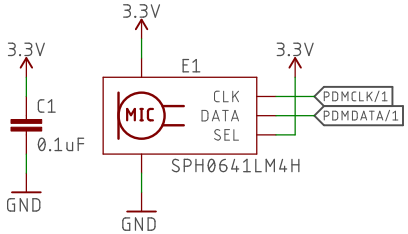

Released under the Creative Commons
Attribution Share-Alike 4.0 License
https://creativecommons.org/licenses/by-sa/4.0/

TITLE: Artemis-Nano

Design by: Nobody

REV: >REV

Date: 6/14/2019 6:44 AM

Sheet: 2/2