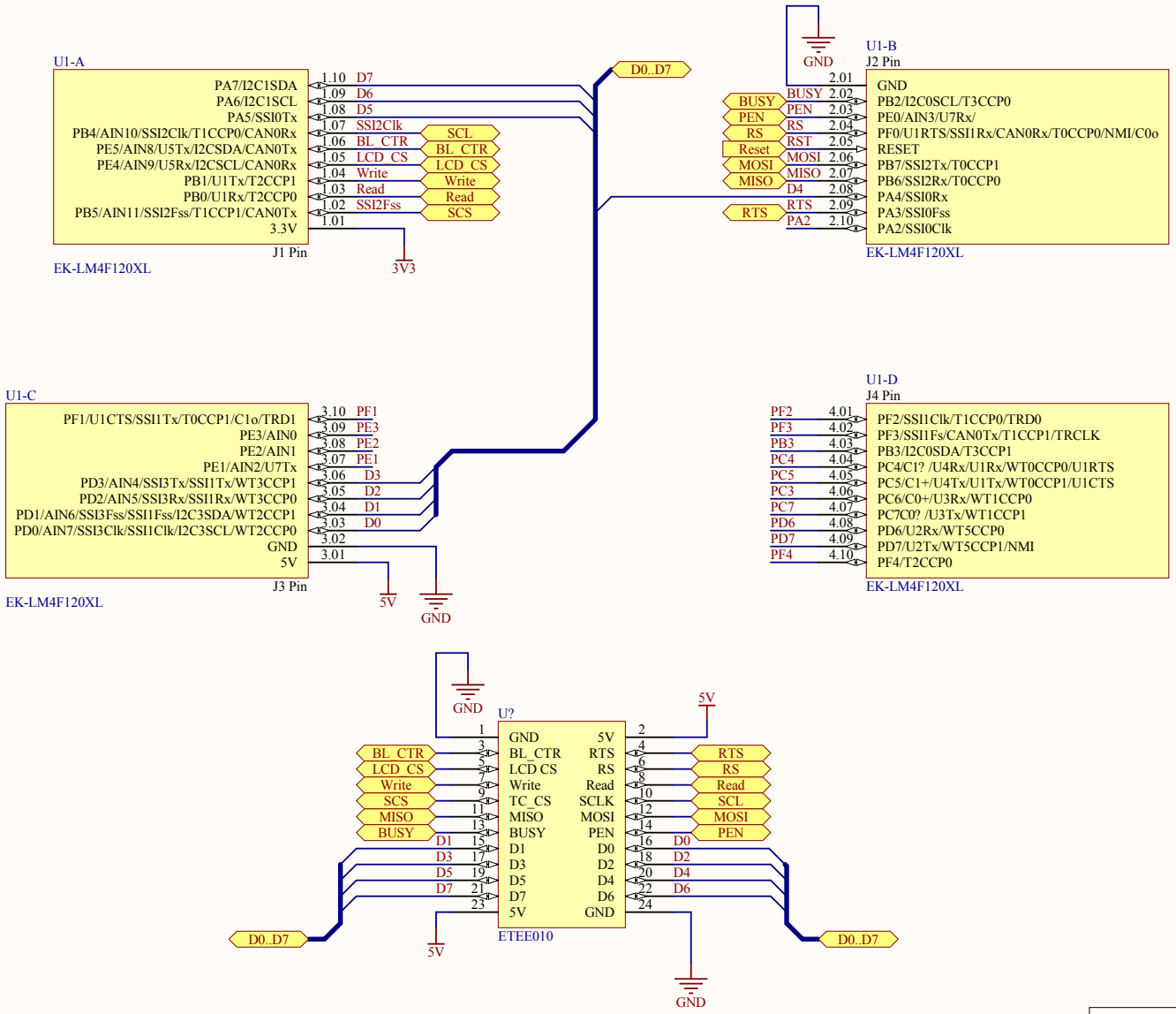

Title : Stellaris LM4F120 With 2.8 TFT LCD		
Date : 1 Jan 2013	Engineer : Pratchaya	
Sheet : 1 of 1	Revision : 1.0b	Size : A4
File : LM4F120 with lcd.SchDoc		