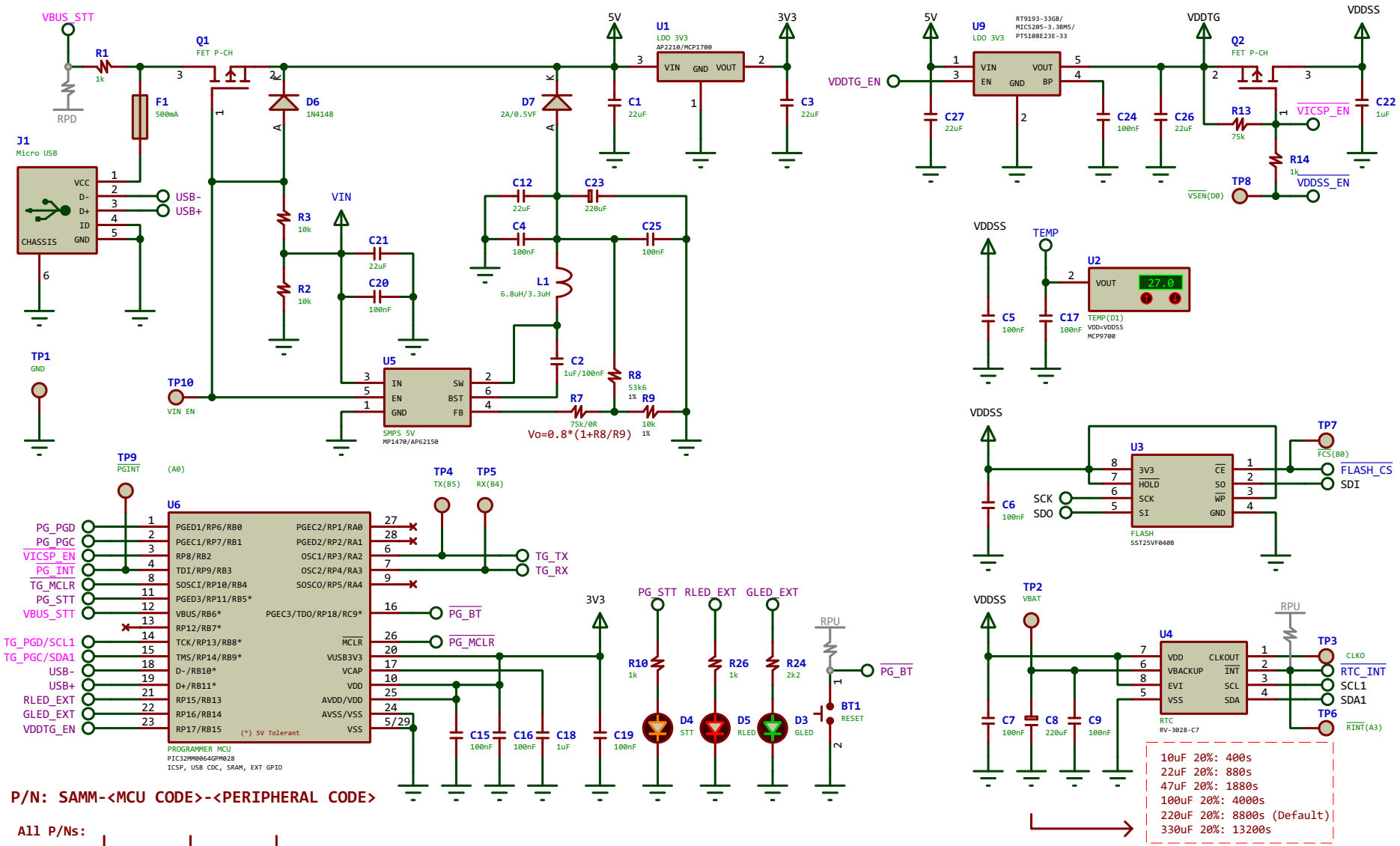

P/N: SAMM-<MCU CODE>-<PERIPHERAL CODE>

All P/Ns:

SAMM-75	SAMM-76	SAMM-77	<NONE>: No Flash, No RTCC, No Temperature Sensor
SAMM-75-T	SAMM-76-T	SAMM-77-T	T : No Flash, No RTCC, Temperature Sensor
SAMM-75-R	SAMM-76-R	SAMM-77-R	R : No Flash, RTCC, No Temperature Sensor
SAMM-75-RT	SAMM-76-RT	SAMM-77-RT	RT : No Flash, RTCC, Temperature Sensor
SAMM-75-F	SAMM-76-F	SAMM-77-F	F : Flash, No RTCC, No Temperature Sensor
SAMM-75-FT	SAMM-76-FT	SAMM-77-FT	FT : Flash, No RTCC, Temperature Sensor
SAMM-75-FR	SAMM-76-FR	SAMM-77-FR	FR : Flash, RTCC, No Temperature Sensor
SAMM-75-FRT	SAMM-76-FRT	SAMM-77-FRT	FRT : Flash, RTCC, Temperature Sensor

DESIGN TITLE: SAMM-75/6/7-F|R|T

Programmer

BY: SAMPI Dev Kit

REV: 2.1

DATE: Mon, 10.5.2021

PAGE: 1 of 3

TIME: 22:58:55

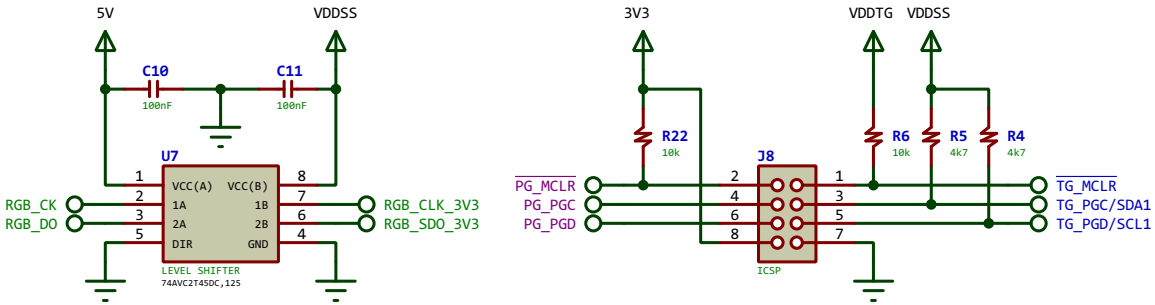

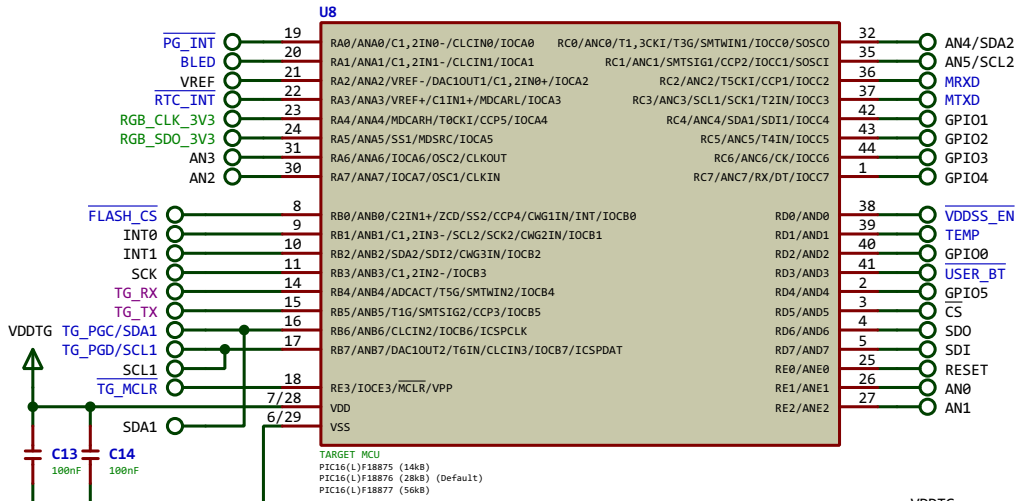

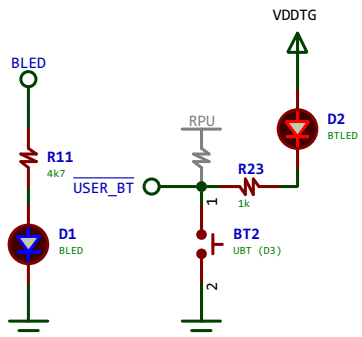

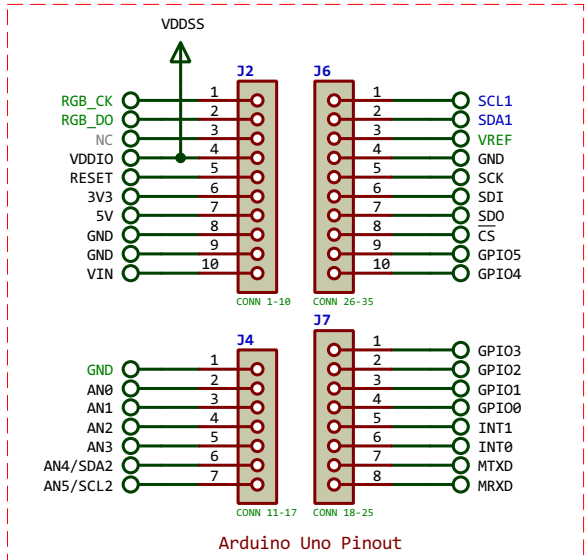

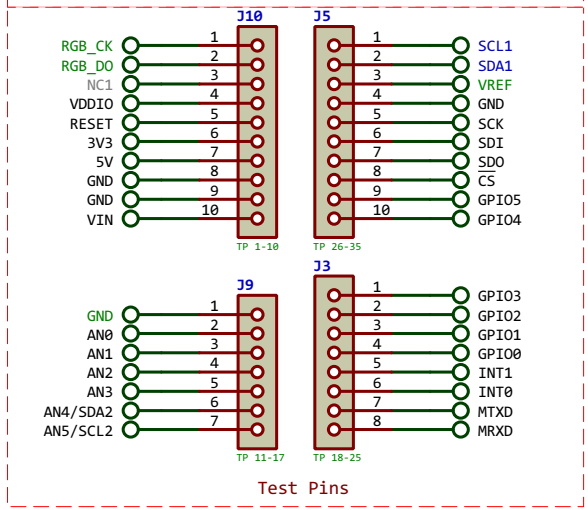

DESIGN TITLE: SAMM-75/6/7-F|R|T

Target MCU

BY: SAMPI Dev Kit

REV: 2.1

DATE: Mon, 10.5.2021

PAGE: 2 of 3

TIME: 22:58:55

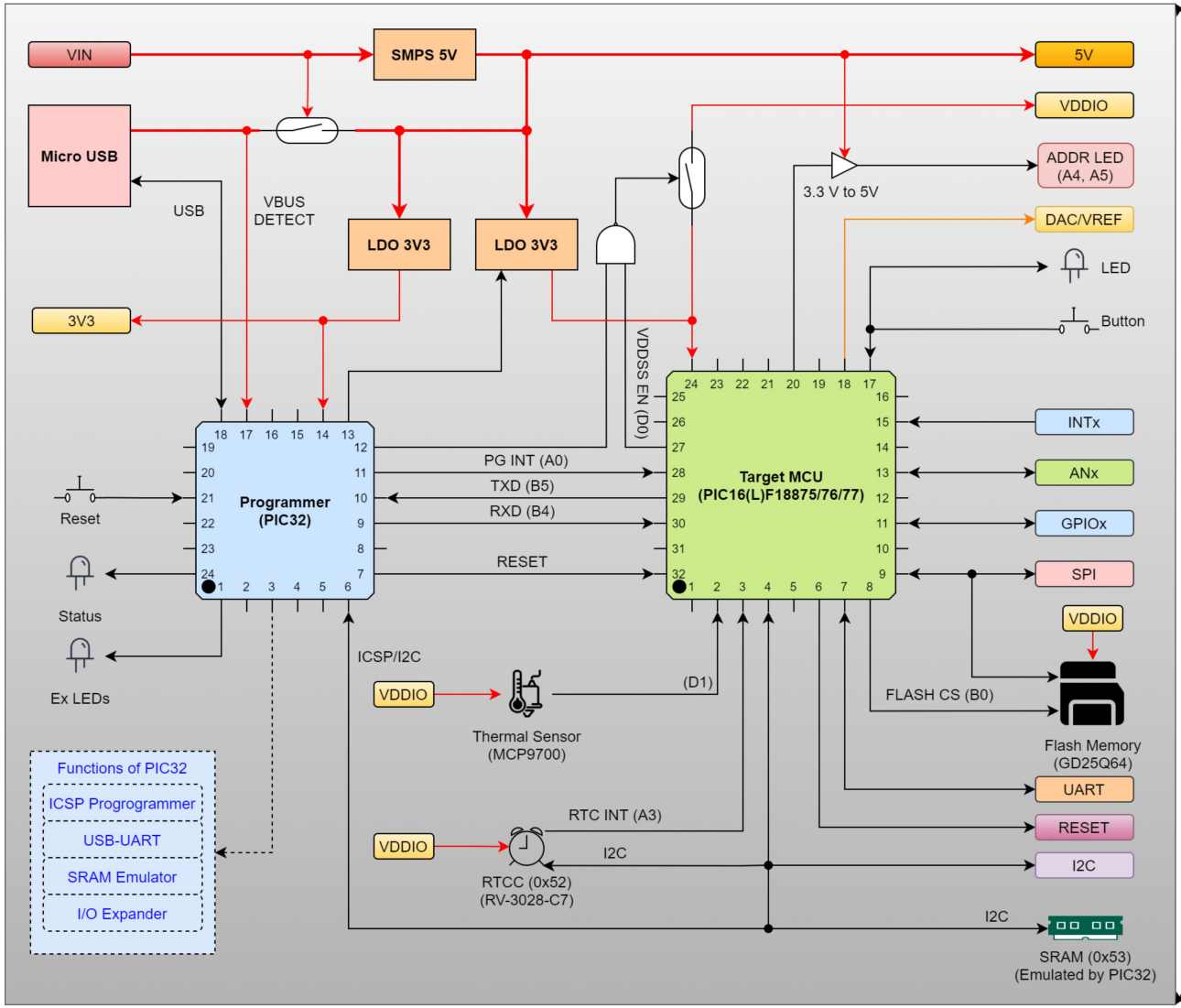

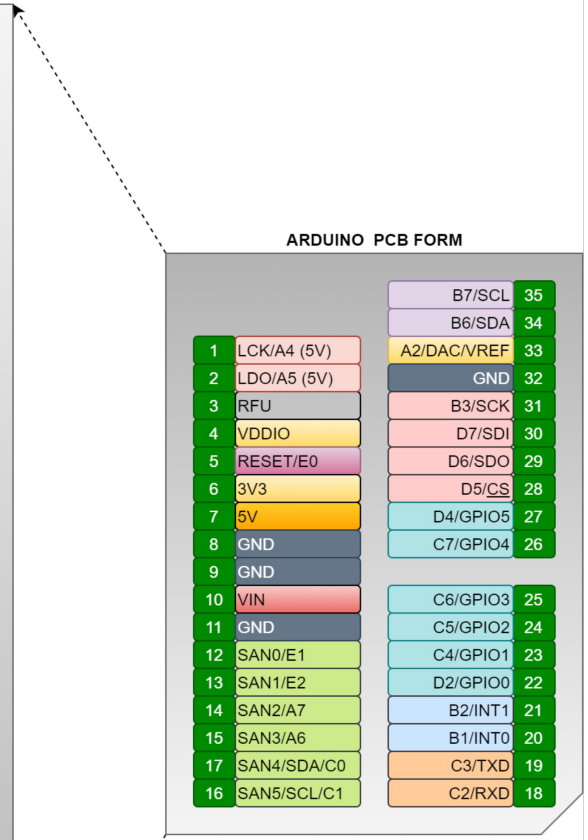

DESIGN TITLE: SAMM-75/6/7-F|R|T	DATE: Mon, 10.5.2021
Block Diagram	PAGE: 3 of 3
BY: SAMPI Dev Kit REV: 2.1	TIME: 22:58:55