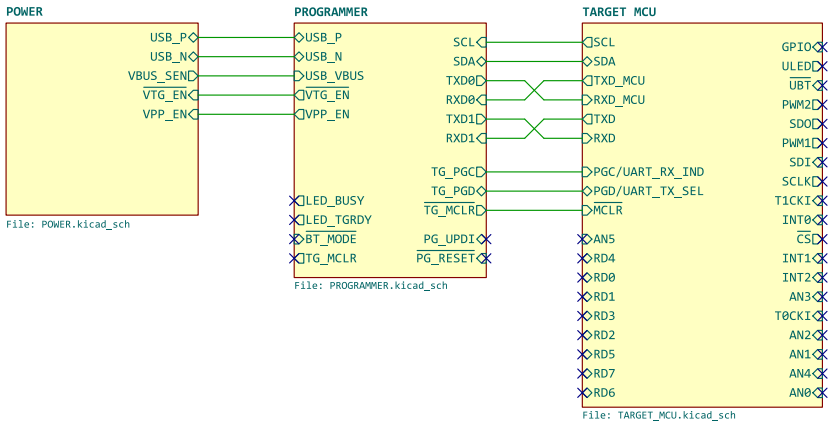

SAMM-16F877A

SAMPI DEVELOPMENT KITS

P/N: SAMM-16F877A

Sheet: /
File: PIC16DevKit.kicad_sch

Title: PIC16F877A DEV KIT

Size: A4	Date: 2025-01-01	**Rev: 0.0**
KiCad E.D.A. 9.0.0		Id: 1/4

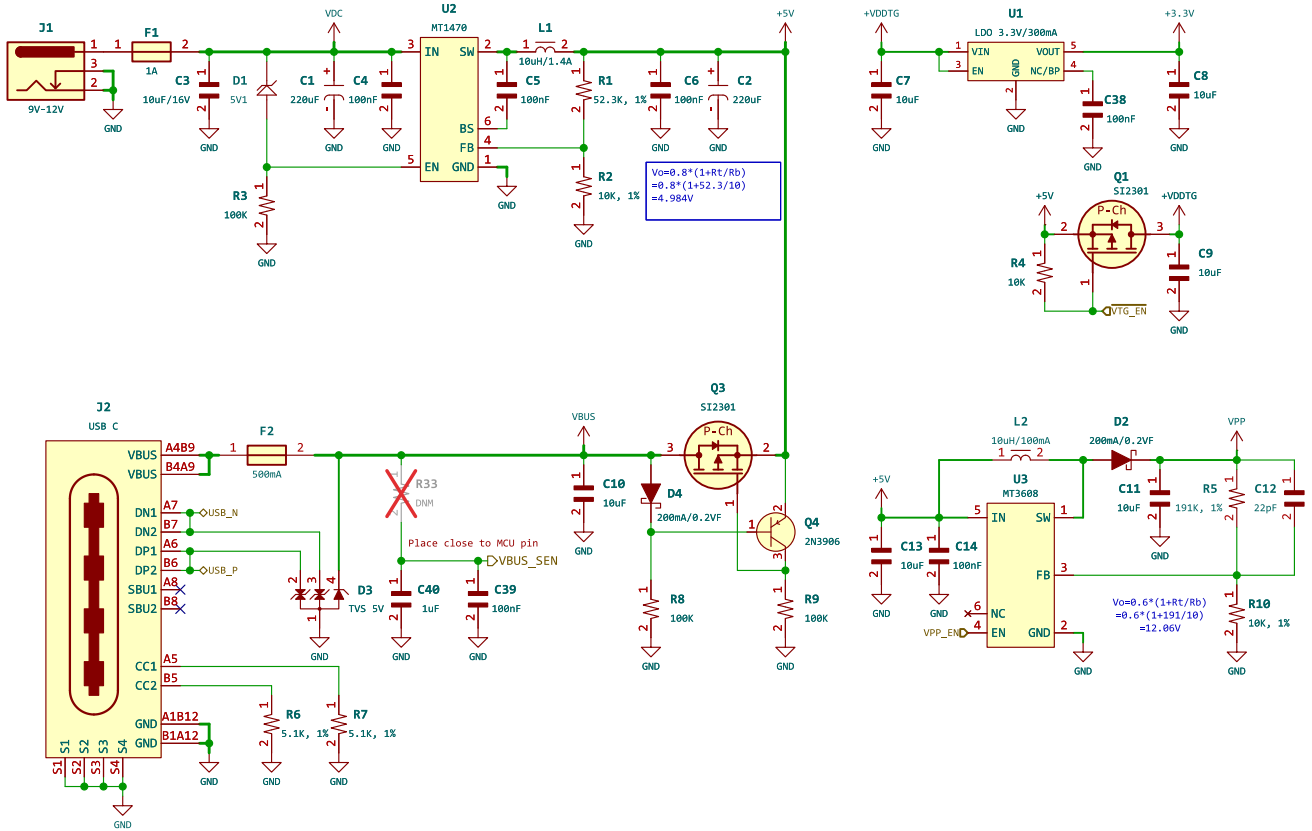

SAMPI DEVELOPMENT KITS

P/N: SAMM-16F877A

Sheet: /POWER/
File: POWER.kicad_sch

Title: PIC16F877A DEV KIT

Size: A4	Date: 2025-01-01	**Rev: 0.0**
KiCad E.D.A. 9.0.0		Id: 2/4

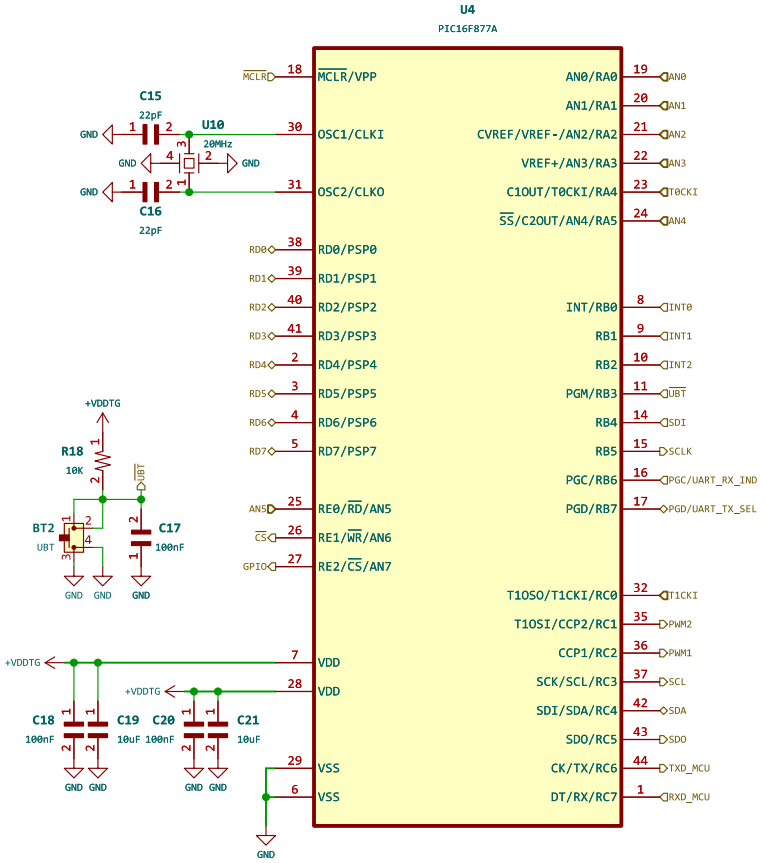

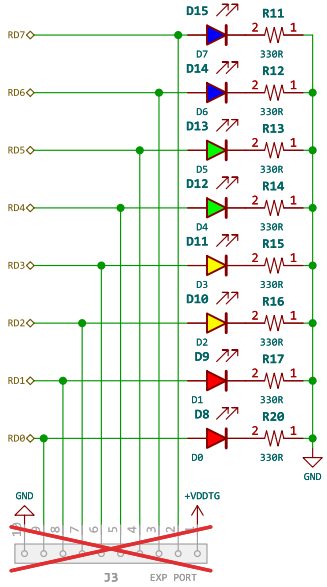

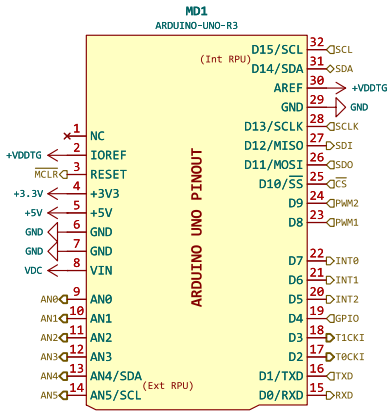

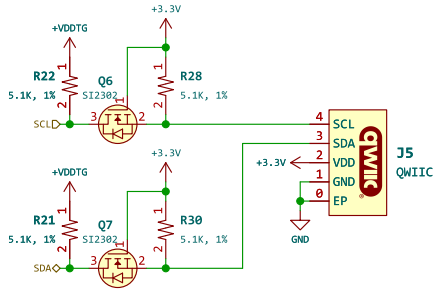

SAMPI DEVELOPMENT KITS

P/N: SAMM-16F877A

Sheet: /TARGET MCU/
File: TARGET_MCU.kicad_sch

Title: PIC16F877A DEV KIT

Size: A4	Date: 2025-01-01	**Rev: 0.0**
KiCad E.D.A. 9.0.0		Id: 3/4

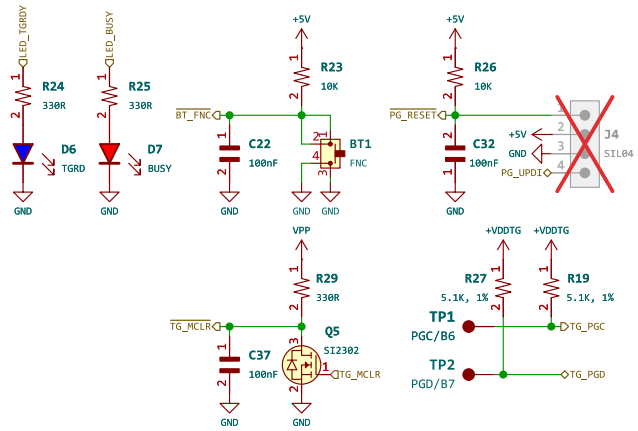

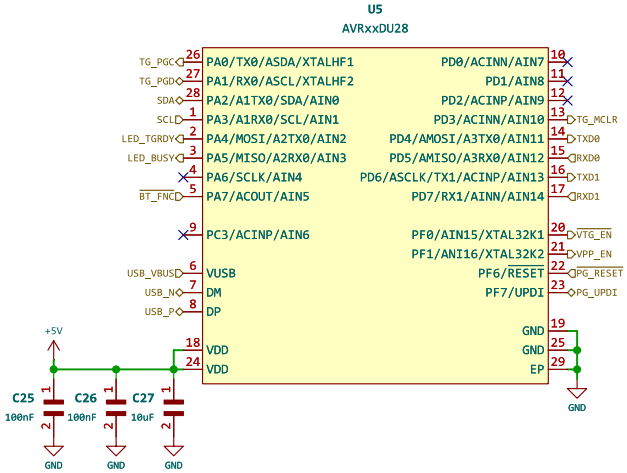

SAMPI DEVELOPMENT KITS

P/N: SAMM-16F877A

Sheet: /PROGRAMMER/
File: PROGRAMMER.kicad_sch

Title: PIC16F877A DEV KIT

Size: A4	Date: 2025-01-01	**Rev: 0.0**
KiCad E.D.A. 9.0.0		Id: 4/4