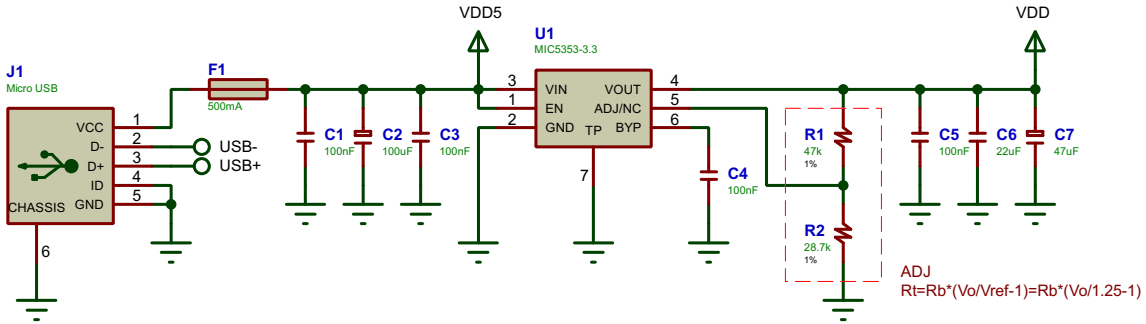

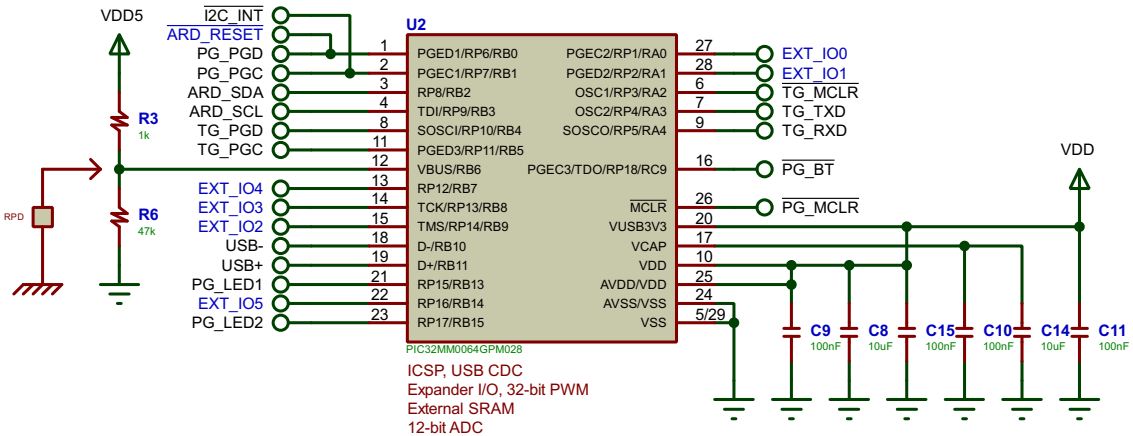

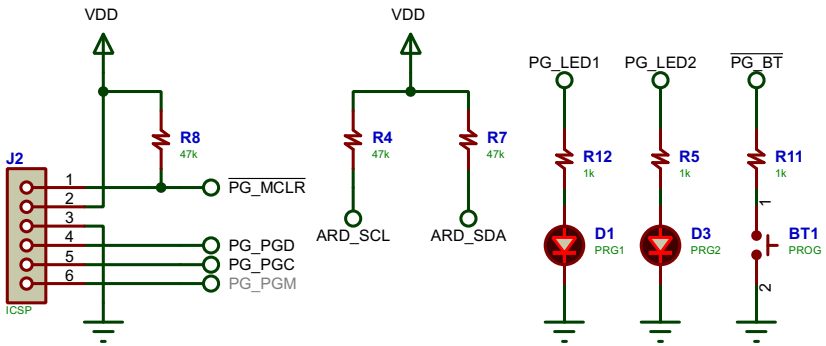

DESIGN TITLE: PIC16 Development Kit	DATE: Wed, 28, 10, 2020
Power	PAGE: 1 of 2
BY: SAMPI Dev Kit	REV: 1.1
	TIME: 00:09:23

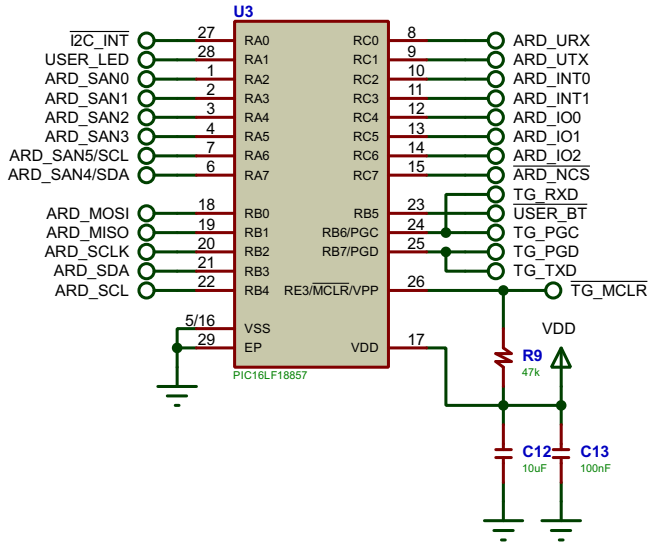

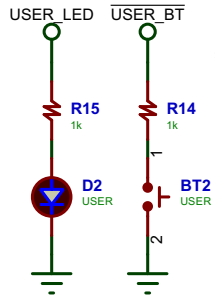

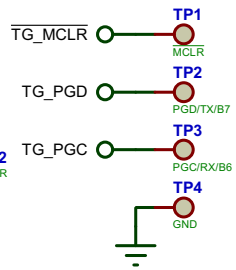

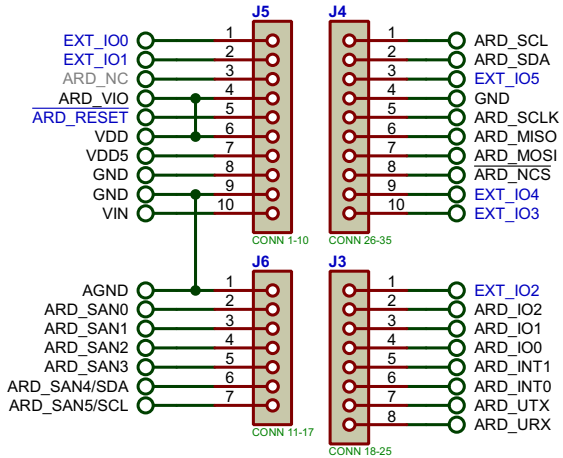

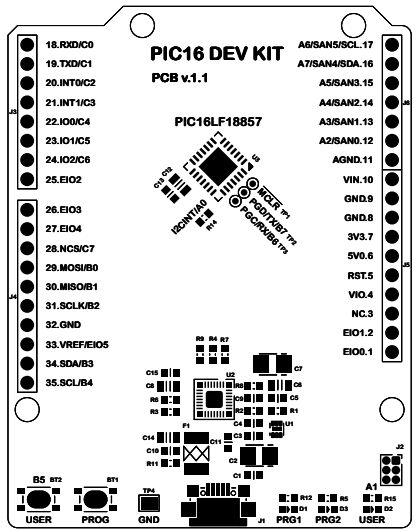

DESIGN TITLE: PIC16 Development Kit	DATE: Wed, 28, 10, 2020
Target MCU	PAGE: 2 of 2
BY: SAMPI Dev Kit REV: 1.1	TIME: 00:09:23