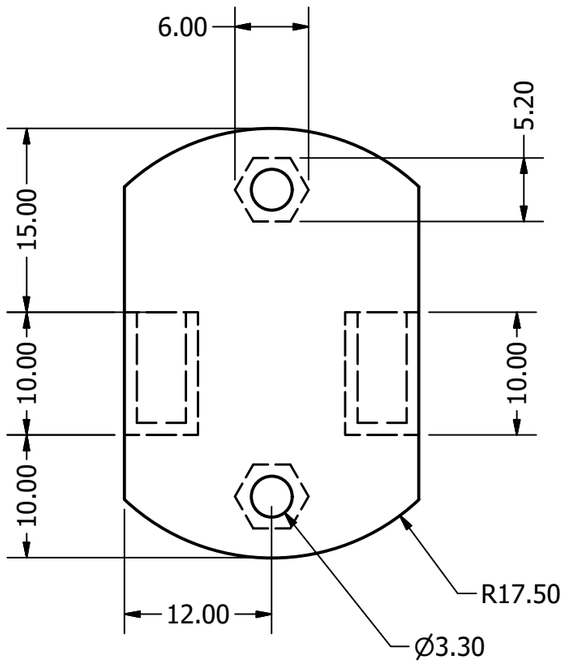

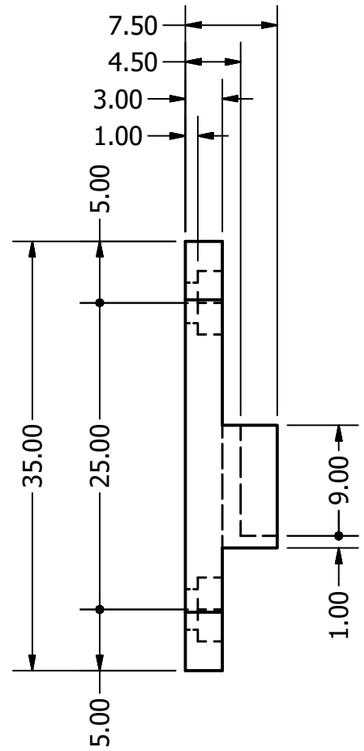

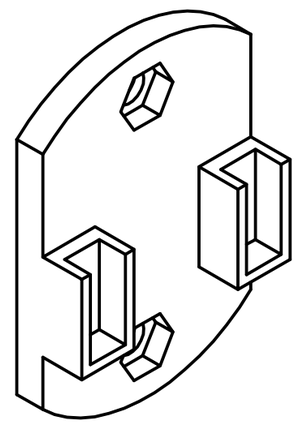

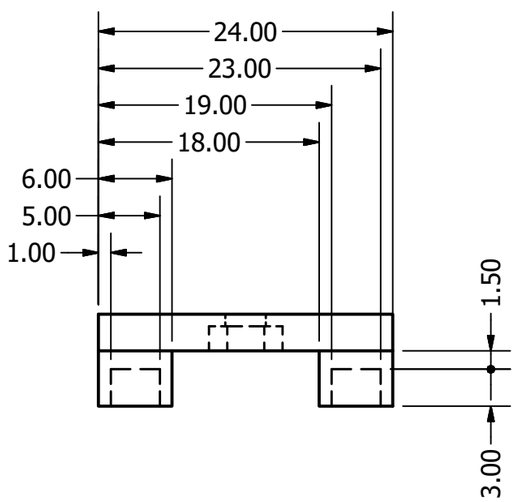

DRAWN SMW	7/06/2018	
CHECKED		TITLE LOWER LOADCELL MOUNT
QA		
MFG		
APPROVED		SIZE A3 / DWG NO SMW-43219667-METR4901 / REV
		SCALE 2 : 1 / SHEET 4 OF 9