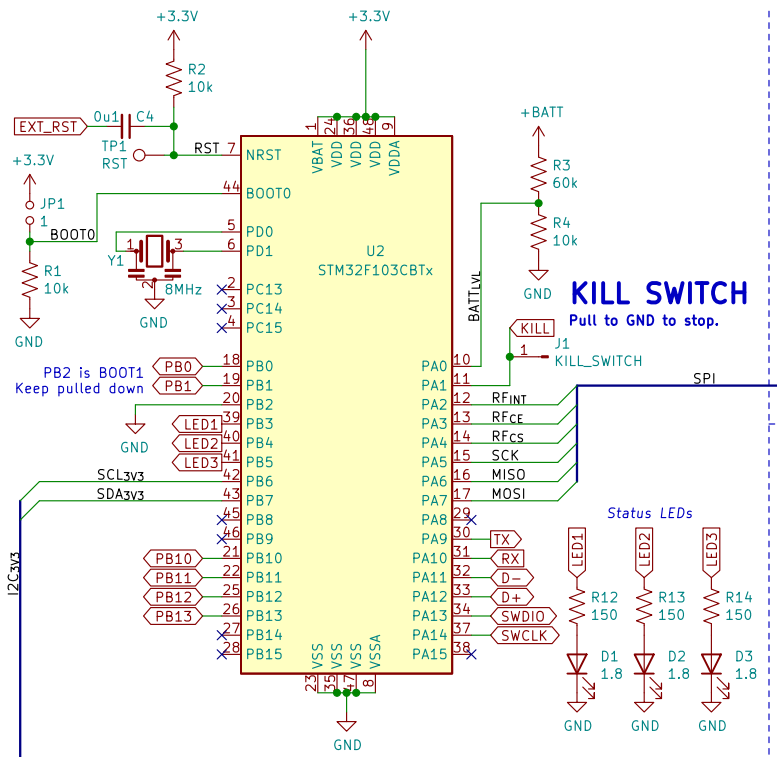

KILL SWITCH

Pull to GND to stop.

Control (Microcontroller Unit (MCU))

Uses an STM32 microcontroller running at 72MHz to control the vehicle. Processes inputs from communications and replies with vehicle status. Collects sensor data to combine with the instructions recieved to determine required output. This is fed into PID loops and kinematic models to exectute it as best possible.

Should be able to be programmed over USB, but has serial bootloader built−in.
Use tweezers to jump pads for BOOT0 or RESET if needed.

Communication

Uses an nRF24L01 module to communicate with base station. Supports ranges up to 1.1km without a special antenna and lowered data rates.

PA+LNA modules preferred.

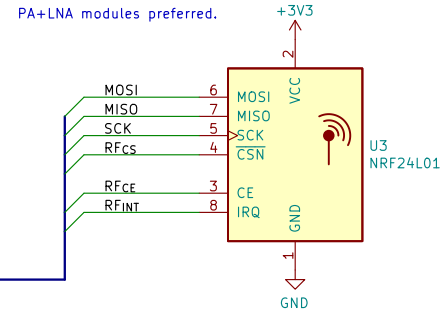

Accelerometer and Gyroscope

Inertia Measuring Unit (IMU) capable of measuring acceleration (up to 16G) and rotation (up to 2000 deg/s) about any axis. Used for stabilization of vehicle.

IMU I2C address is 0x69

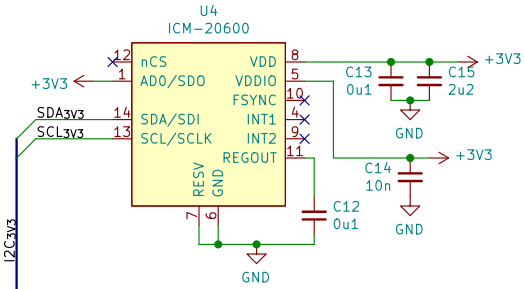

I2C Level−Shifter

Enables safe communication between 3.3V and 5V systems.
Based on the principle of I2C being an "open−drain" system.

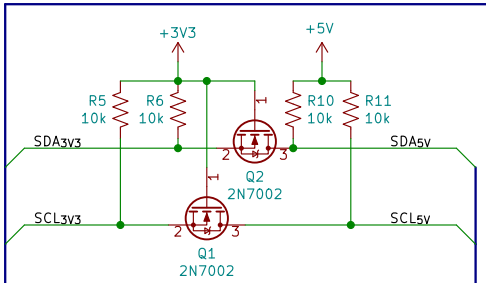

Barometer

Measures the air pressure digitally.
The pressure is used to deduce altitude.

Operating range: 300 to 1100hPa
Equivalent to: −500 to +9000m
1m in altitude is a change of 0.12hPa.

Barometer} I2C address is 0x77

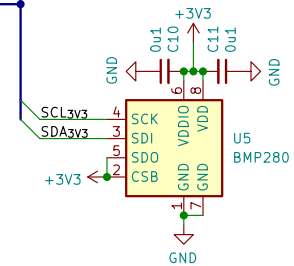

I2C Connector

Connects to the external systems, primarily for the motors.
Assumes sytems are 5V tolerant. Also used to supply power to flight board from an external 5V regulator.

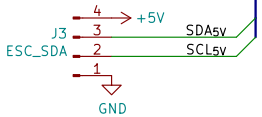

Extra Input/Output

Unused pins from the MCU (and an additional KILL connect) for the easy implementation of custom functionality and features.

Power

This board runs on 3.3V, however 5V is supplied from an external sopurce. Due to the sensitive nature of the sensors a linear regulator is used to reduce footprint nd minimize noise on the sensitive sensors. Efficiency is not a primary concern due to their low power draws.

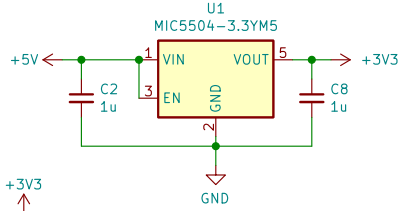

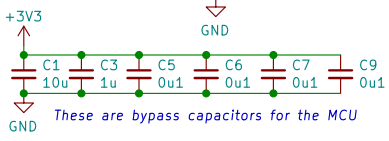

These are bypass capacitors for the MCU

Power Pads

Used to start the power rails.
Second GND is to easily short RESET to GND when needed.

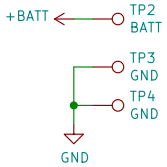

Mounting holes are in 33.5mm square

Mini−USB Connection

Enables MCU to communicate and be programmed and hopefully configured over USB.

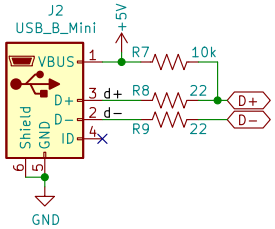

Serial Programming and Debugging

Interface to program the control system like an Arduino using a UART adapter.
Note: TX on board to connect to RX on adapter!

Debugging connections used for debugging (suprise!) over Serial Wire protocol

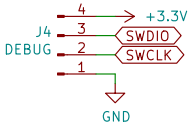

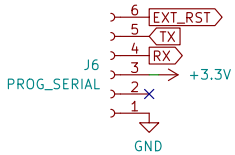

Centered around an STM32. Requires external 5V.
Built in 6−axis IMU, barometer, communication, and 3V3 regulator.
Designed for use with I2C modules, GPIO pins also available.
Power rails integrated on rear side.

Title: 32−Bit Flight Controller & Power Board		
Savo Bajic	Date: 2020−06−02	**Rev: 2.1**
KiCad E.D.A. kicad 6.0.1−79c1e3a40b−116−ubuntu21.04.1	Size: USLetter	Sheet: 1/1