GROSS and NET TONNAGE CALCULATION

for

M/V NAMO

Document No_____:TNG100-000
Date Of Preparation___:09.05.2013
Revision No_____:00
Date of Revision_____:-
Calculated By_____:F.YILMAZ /NAVAL ARCHITECT

1636 TDW-GENERAL CARGO SHIP VESSEL

GENERAL PARTICULARS

NAME OF SHIP	:	M/V NAMO
LENGTH OVER ALL	:	66.140 METRES
LENGTH BETWEEN PERP.	:	59.970 METRES
BREADTH	:	11.340 METRES
DEPTH	:	5.240 METRES
SUMMER DRAFT	:	4.460 METRES
SHIP TYPE	:	GENERAL CARGO VESSEL
FLAG	:	UNION OF COMOROS
PORT OF REGISTRY	:	MORONI
CLASSIFICATION	:	VENEZUELAN REGISTER OF SHIPPING
NAVIGATION AREA	:	OCEAN GOING
OFFICIAL NUMBER	:	1201103
OWNER	:	NAMO SHIPPING S.A. – BELIZE
MANAGER / OPERATOR	:	IMS ISTANBUL
PLACE OF BUILT	:	NETHARLANDS

INTERNATIONAL TONNAGE CERTIFICATE 1969

Issued under the provisions of the International Convention on Tonnage Measurement of Ships, 1969,

under the authority of the Government of

REPUBLIC OF UNION OF COMOROS

Name of Ship	Distinctive Number or letters	Port of Registry	Date
NAMO	D6FV7	MORONI	1980

*Date on which the keel was laid or the ship was at a similar stage of construction (Article 2(6)), or date on which the ship underwent alterations or modifications of a major character (Article 3(2)(b)),as appropriate

MAIN DIMENSIONS

Length Article 2(8)	Breadth Regulation 2(3)	Moulded Depth amidships to Upper Deck Regulation 2(2)	IMO Number
62.93	11.34	5.24	7823308

THE TONNAGES OF THE SHIP ARE

GROSS TONNAGE ……..934……

NET TONNAGE ……589……..……

This is to certify that the tonnages of this ship have been determined in accordance with the provisions of the International Convention on Tonnage Measurement of Ships,1969.

Issued at …… ……the …… ……2013

The undersigned declares that he is duly authorized by the said Government to issue this certificate.

SPACES INCLUDED IN TONNAGE							
GROSS TONNAGE				NET TONNAGE			
Name of Space	Location(Frames)	Length	Volume	Name of Space	Location(Frames)	Length	Volume
UNDERDECK (Included hatch coaming and F-castle and A-castle)	AFT-STEM	65.330	3000.98	CARGO HOLD	21-83	37.20	2120.99
POOP DECK	07-21	8.40	157.85	HATCH COVERS	27-83	33.86	86.27
BRIDGE DECK	07-21	8.40	159.26				
RUDDER	-03-01	1.85	1.68				
FUNNEL	01-05	2.60	43.96				
HATCH COVERS	27-83	33.86	86.27				

NUMBER OF PASSANGERS(Regulation 4(1))	
Number of passangers in cabins with not more than 8 berths	NIL
Number of other passangers	NIL

EXCLUDED SPACES (Regulation 2(5))

NIL

An asterisk (*) shoul be added to those spaces listed above which comprise both enclosed and excluded spaces

MOULDED DRAUGHT (Regulation 4(2))	4.460 m

Date and place of original measurement

Date and place of last previous measurement

REMARKS

GROSS TONNAGE	
Total Gross Volume:V	3450.0
K1=0,2 + 0,02 logV	0.271
GROSS TONNAGE: K1 x V	**934**

NET TONNAGE	
Total Net Volume:Vc	2207.26
K2=0,2 + 0,02 logVc	0.27
K3=1,25 (GT +10000)/10000	1.37
DEPTH MOULDED [Reg 2(2)] : D	5.24
DRAUGHT [Reg 4 (2)] : d	4.460
The passenger number where there is no more than eight bed available in the cabin : N1	0.00
Other Passenger: N2	0.00
((4*d)/(3*D))^2 ≤ 1	1.29
K2*Vc((4*d)/(3*D))^2	589
0,25*GT	234
((4*d)/(3*D))^2=> 0,25*GT	589
K3*(N1+(N2/10))	0
K2*Vc((4*d)/(3*D))^2+K3*(N1+(N2/10))	589
0,30*GT	280
K2*Vc((4*d)/(3*D))^2+K3*(N1+(N2/10)) =>0,30*GT	589
NET TONNAGE	**589**

DATE	9/5/2013	DATE	
PREPARED BY		CHECKED BY:	
FATİH YILMAZ NAVAL ARCHITECTURE&MARINE ENGINEERING 			

M/v NAMO

HULL SUMMARY

HULL -3D PROPERTIES

Mainhull Compartments

Compartment	Frames	Volume(m ^ 3)	LCG(m)	TCG(m)	VCG(m)
HULL Envelope	-05-104	3000.984	29.207	0.000	3.635
Total		**3000.984**	**29.207**	**0.000**	**3.635**

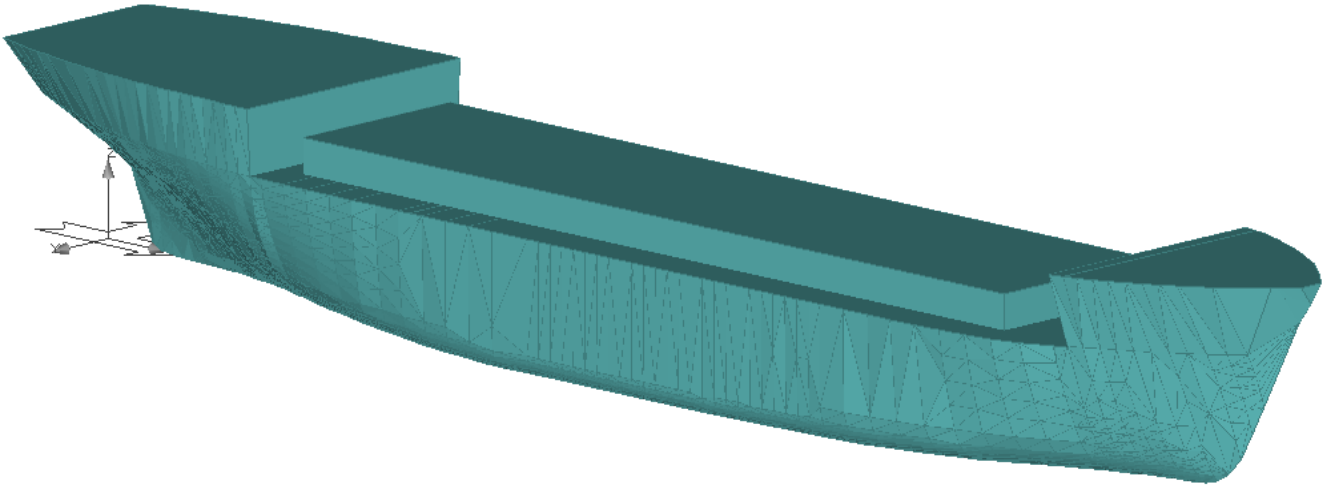

3D View -1

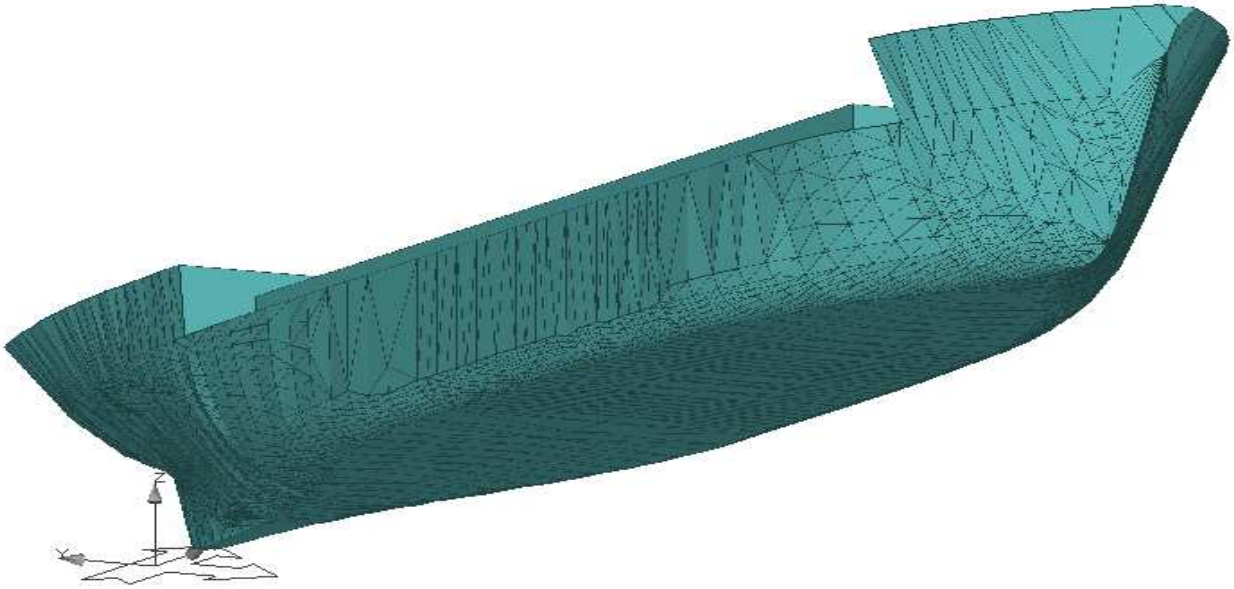

3D View -2

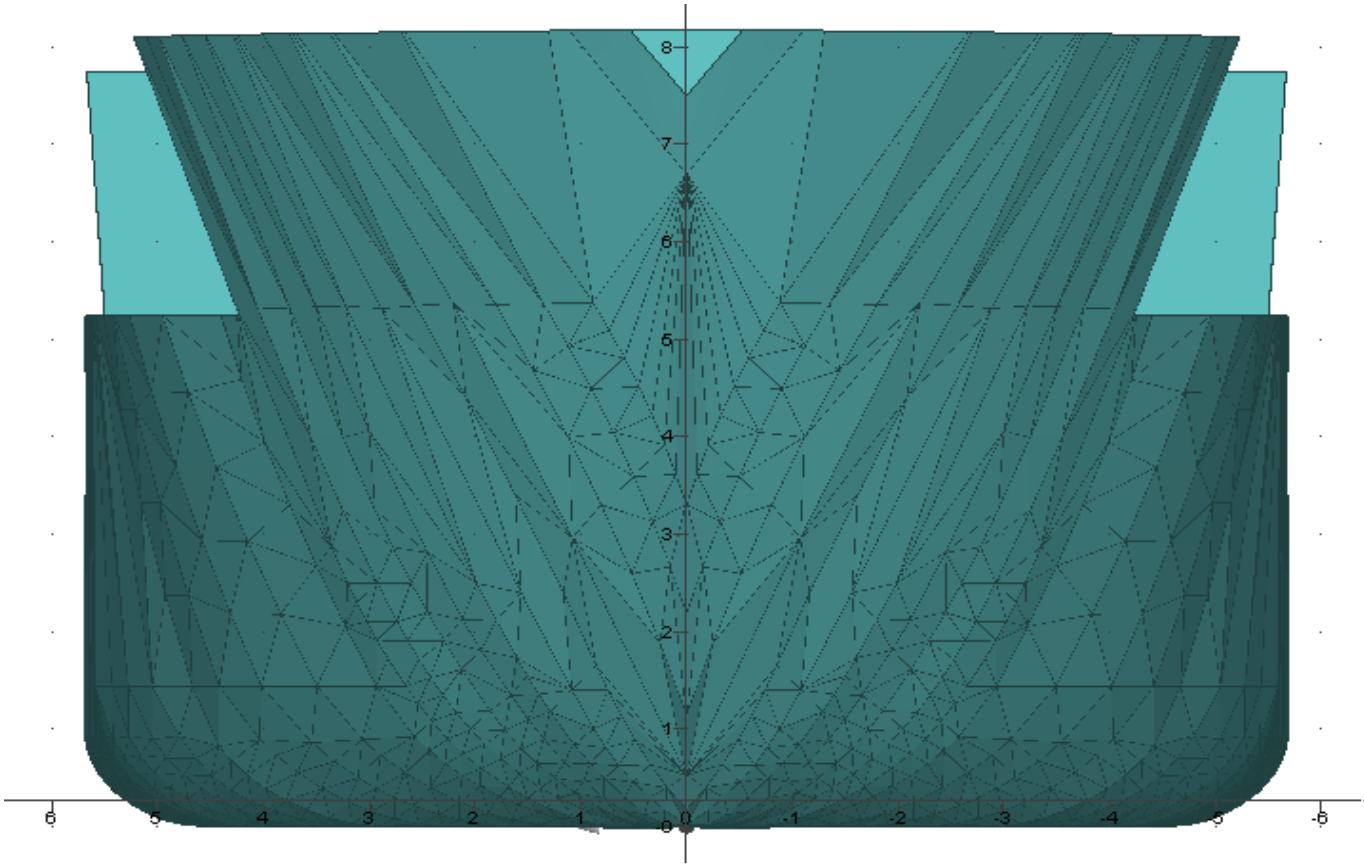

Section View

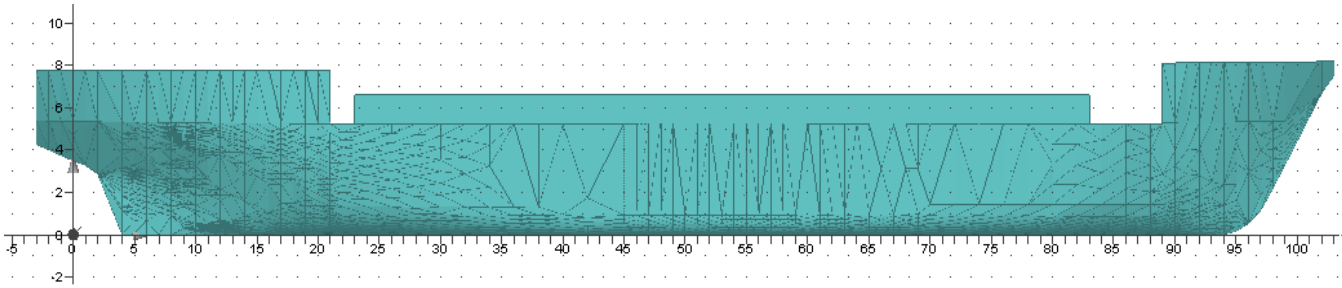

Side View

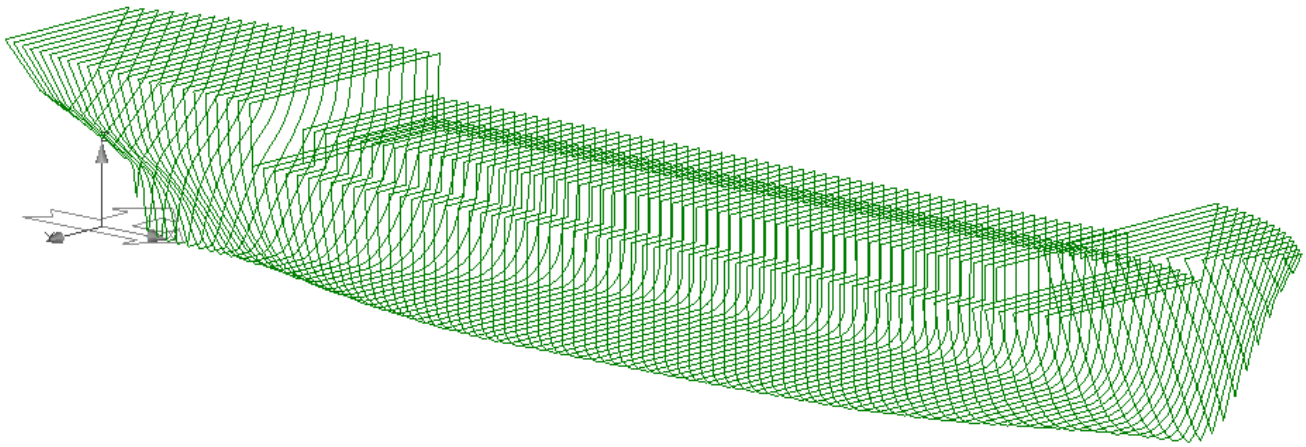

3D wire view

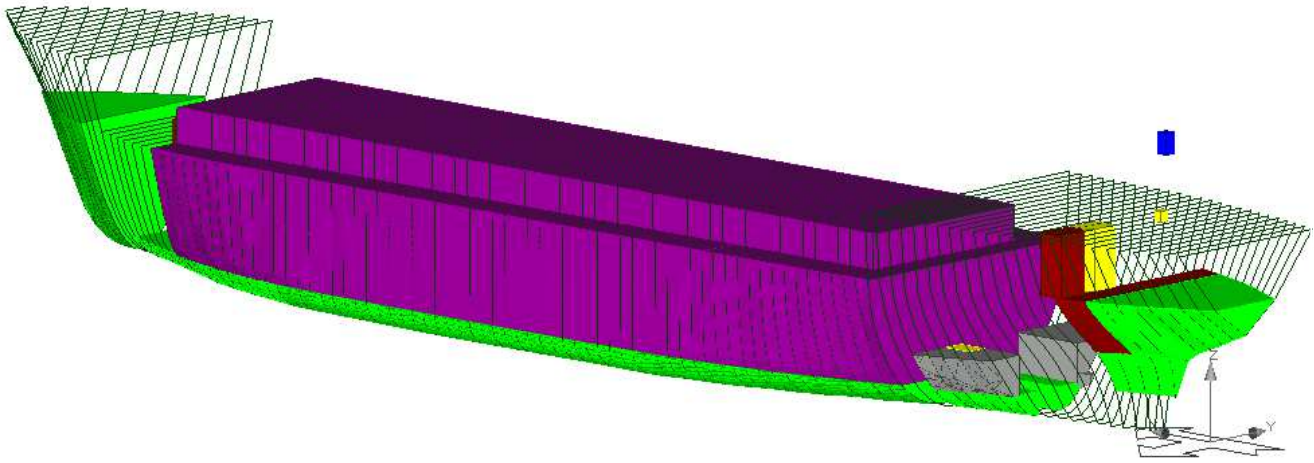

Compartment view

POOP DECK

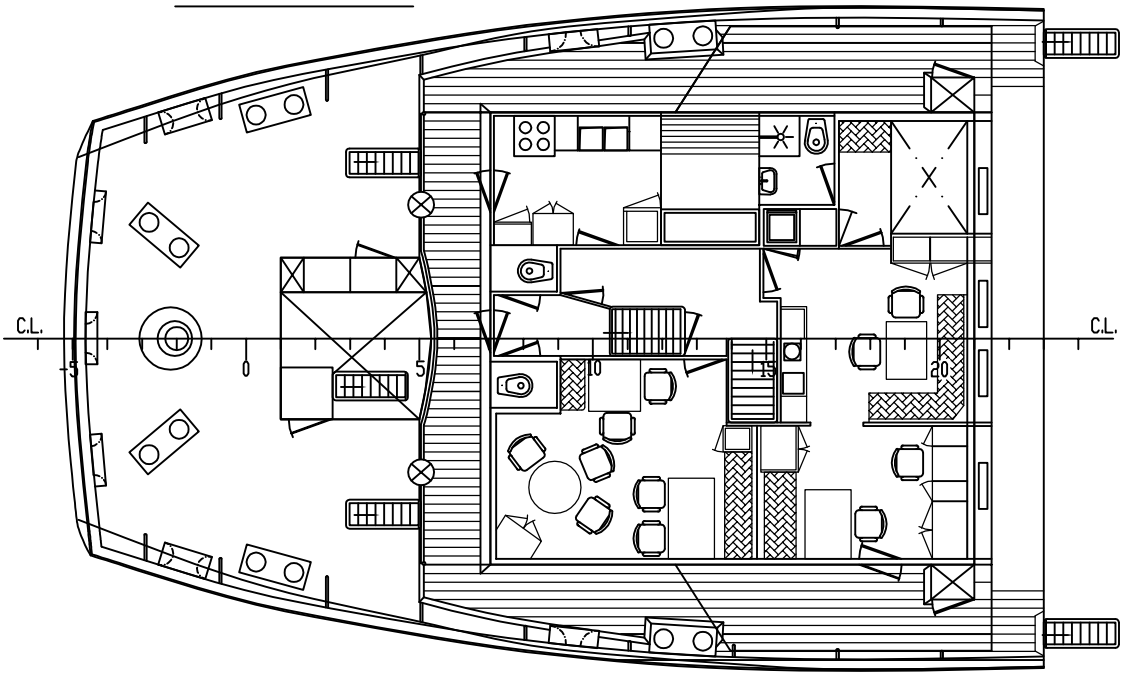

POOP DECK

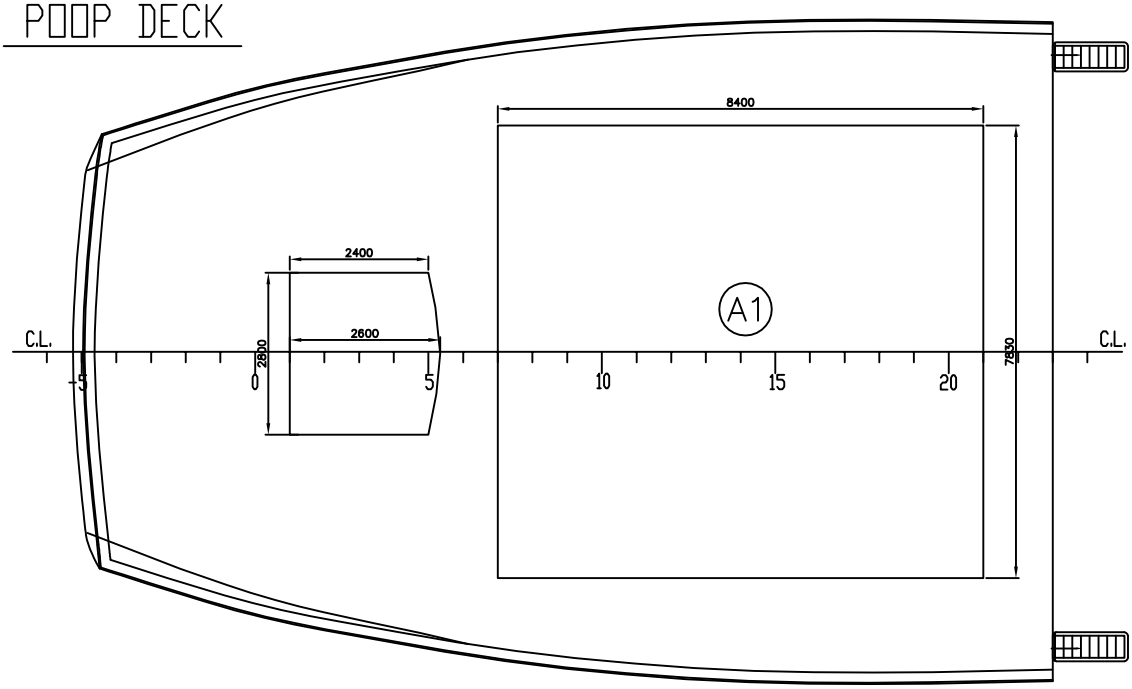

Deck Height: 2400 mm

A1 =65.772 M2

Poop Deck Volume :(A1)*H=157.85 M3

M/V NAMO		INTERNATIONAL TONNAGE CALCULATION (GROSS and NET TONNAGE)		TARIH Date	09.05.2013
				ÖLÇEK Scale	A4
Hesaplayan Calc by		GEMI TIPI Ship Type	GENERAL CARGO	PROJE NO Project Nr	
Hesaplayan Calc by	Fatih YILMAZ	TERSANE Shipyard	Bodewes'Scheepswerven B.V.	HESAP NO Calc Nr	
KONTROL Checked by	Fatih YILMAZ	ARMATOR Owner	NAMO SHIPPING S.A.	PAFTA ADEDI Nr. of Sh.	
		KLAS KURUMU Classification Society	VENEZUELAN REGISTER OF SHIPPING	PAFTA NO Sheet	

BRIDGE DECK

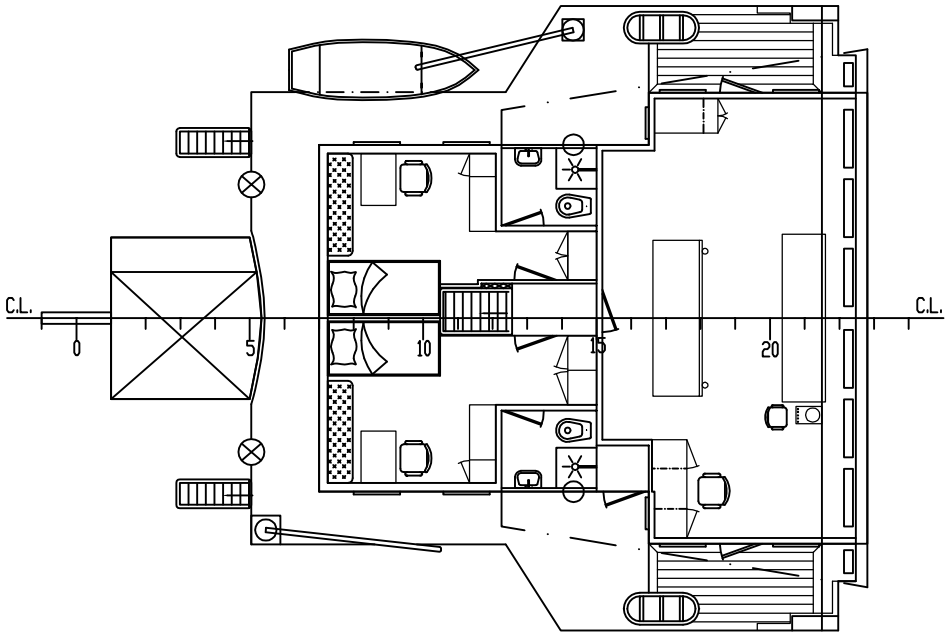

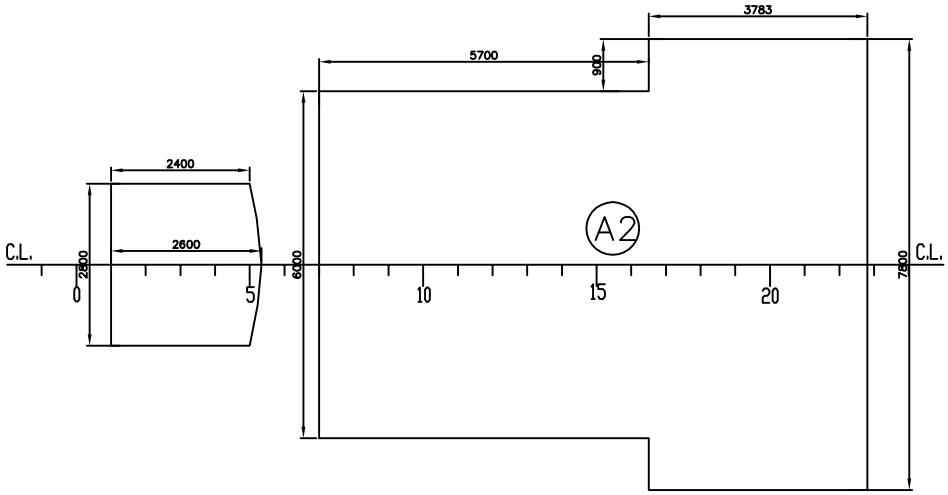

Deck Height: 2500 mm

A2 =63.703 M2

Bridge Deck Volume :(A2)*H=159.258 M3

M/V NAMO		INTERNATIONAL TONNAGE CALCULATION (GROSS and NET TONNAGE)		TARIH Date	09.05.2013
				ÖLÇEK Scale	A4
Hesaplayan Calc by		GEMI TIPI Ship Type	GENERAL CARGO	PROJE NO Project Nr	
Hesaplayan Calc by	Fatih YILMAZ	TERSANE Shipyard	Bodewes'Scheepswerven B.V.	HESAP NO Calc Nr	
KONTROL Checked by	Fatih YILMAZ	ARMATOR Owner	NAMO SHIPPING S.A.	PAFTA ADEDI Nr. of Sh.	
		KLAS KURUMU Classification Society	VENEZUELAN REGISTER OF SHIPPING	PAFTA NO Sheet	

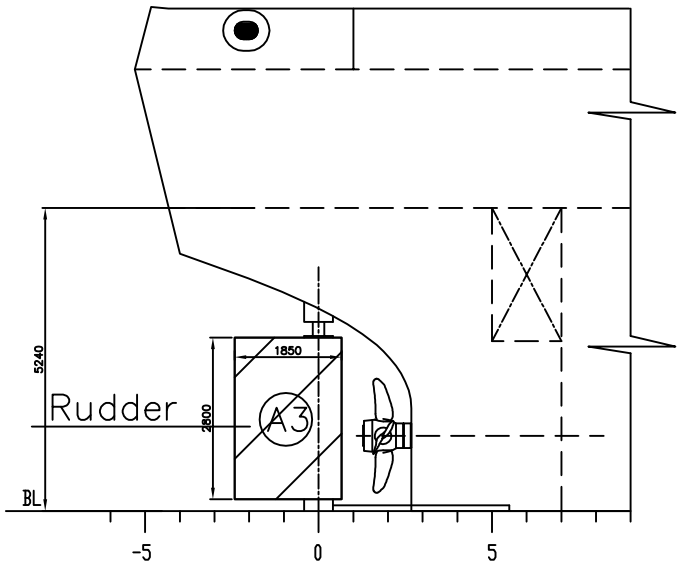

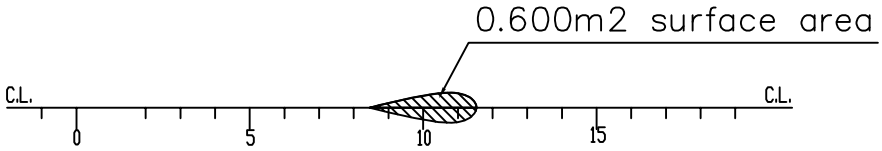

rudder Height: 2800 mm

A3 =0.600 M2

Rudder Volume A3*H=1.680 M3

M/V NAMO		INTERNATIONAL TONNAGE CALCULATION (GROSS and NET TONNAGE)		TARIH Date	09.05.2013
				ÖLÇEK Scale	A4
Hesaplayan Calc by		GEMI TIPI Ship Type	GENERAL CARGO	PROJE NO Project Nr	
Hesaplayan Calc by	Fatih YILMAZ	TERSANE Shipyard	Bodewes'Scheepswerven B.V.	HESAP NO Calc Nr	
KONTROL Checked by	Fatih YILMAZ	ARMATOR Owner	NAMO SHIPPING S.A.	PAFTA ADEDI Nr. of Sh.	
		KLAS KURUMU Classification Society	VENEZUELAN REGISTER OF SHIPPING	PAFTA NO Sheet	

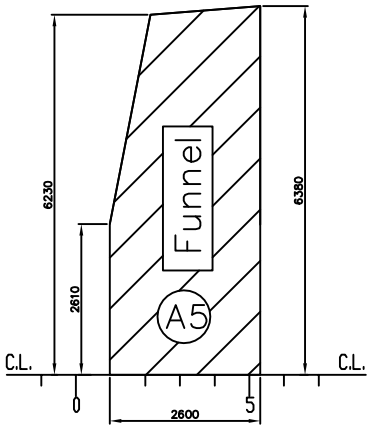

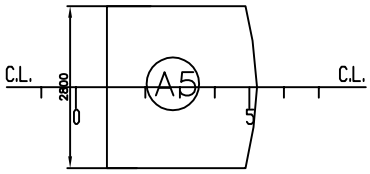

Funnel Width: 2800 mm

A5 =15.070 M2

Funnel Volume A5*width=43.96 M3

M/V NAMO		INTERNATIONAL TONNAGE CALCULATION (GROSS and NET TONNAGE)		TARIH Date	09.05.2013
				ÖLÇEK Scale	A4
Hesaplayan Calc by		GEMI TIPI Ship Type	GENERAL CARGO	PROJE NO Project Nr	
Hesaplayan Calc by	Fatih YILMAZ	TERSANE Shipyard	Bodewes'Scheepswerven B.V.	HESAP NO Calc Nr	
KONTROL Checked by	Fatih YILMAZ	ARMATOR Owner	NAMO SHIPPING S.A.	PAFTA ADEDI Nr. of Sh.	
		KLAS KURUMU Classification Society	VENEZUELAN REGISTER OF SHIPPING	PAFTA NO Sheet	

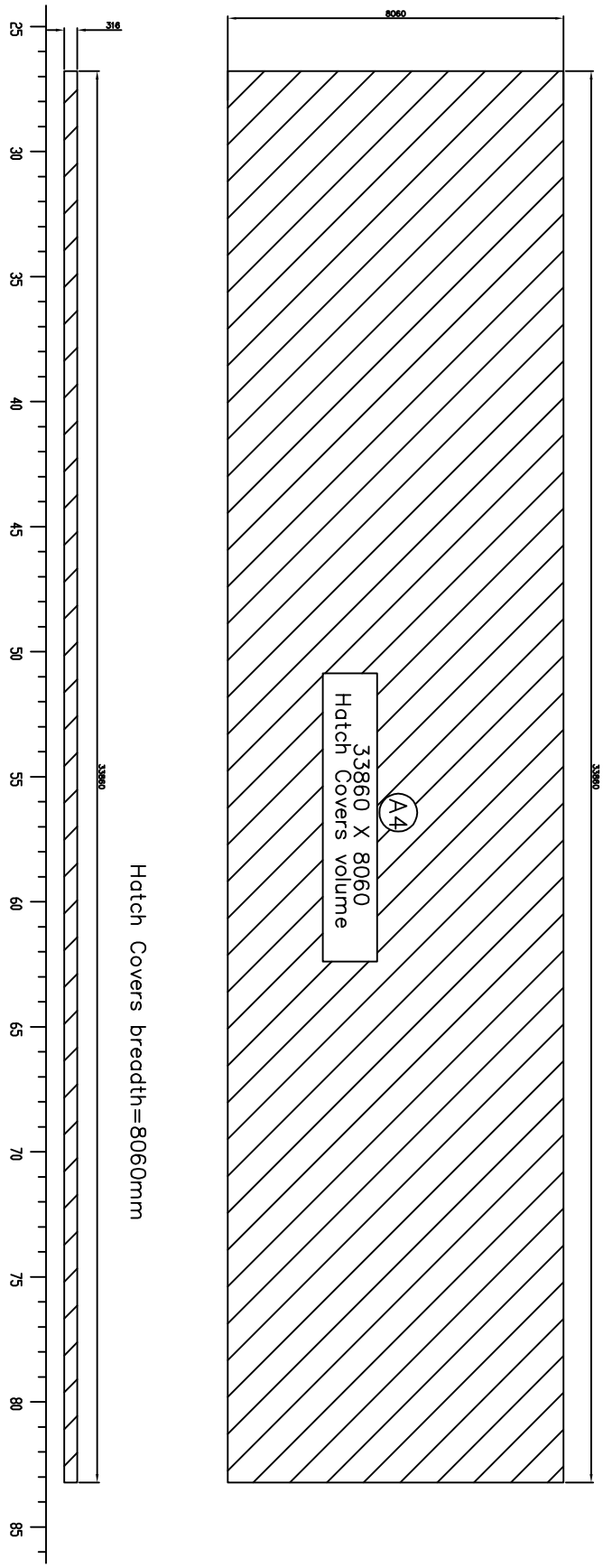

Hatch covers Height: 316 mm

A4 =273.0 M2

Hatch Covers Volume A4*H=86.268 M3

M/V NAMO		INTERNATIONAL TONNAGE CALCULATION (GROSS and NET TONNAGE)		TARIH Date	09.05.2013
				ÖLÇEK Scale	A4
Hesaplayan Calc by		GEMİ TİPİ Ship Type	GENERAL CARGO	PROJE NO Project Nr	
Hesaplayan Calc by	Fatih YILMAZ	TERSANE Shipyard	Bodewes'Scheepswerven B.V.	HESAP NO Calc Nr	
KONTROL Checked by	Fatih YILMAZ	ARMATOR Owner	NAMO SHIPPING S.A.	PAFTA ADEDİ Nr. of Sh.	
		KLAS KURUMU Classification Society	VENEZUELAN REGISTER OF SHIPPING	PAFTA NO Sheet	

GROSS TONNAGE DETAILS

M/v NAMO

PROFILE VIEW

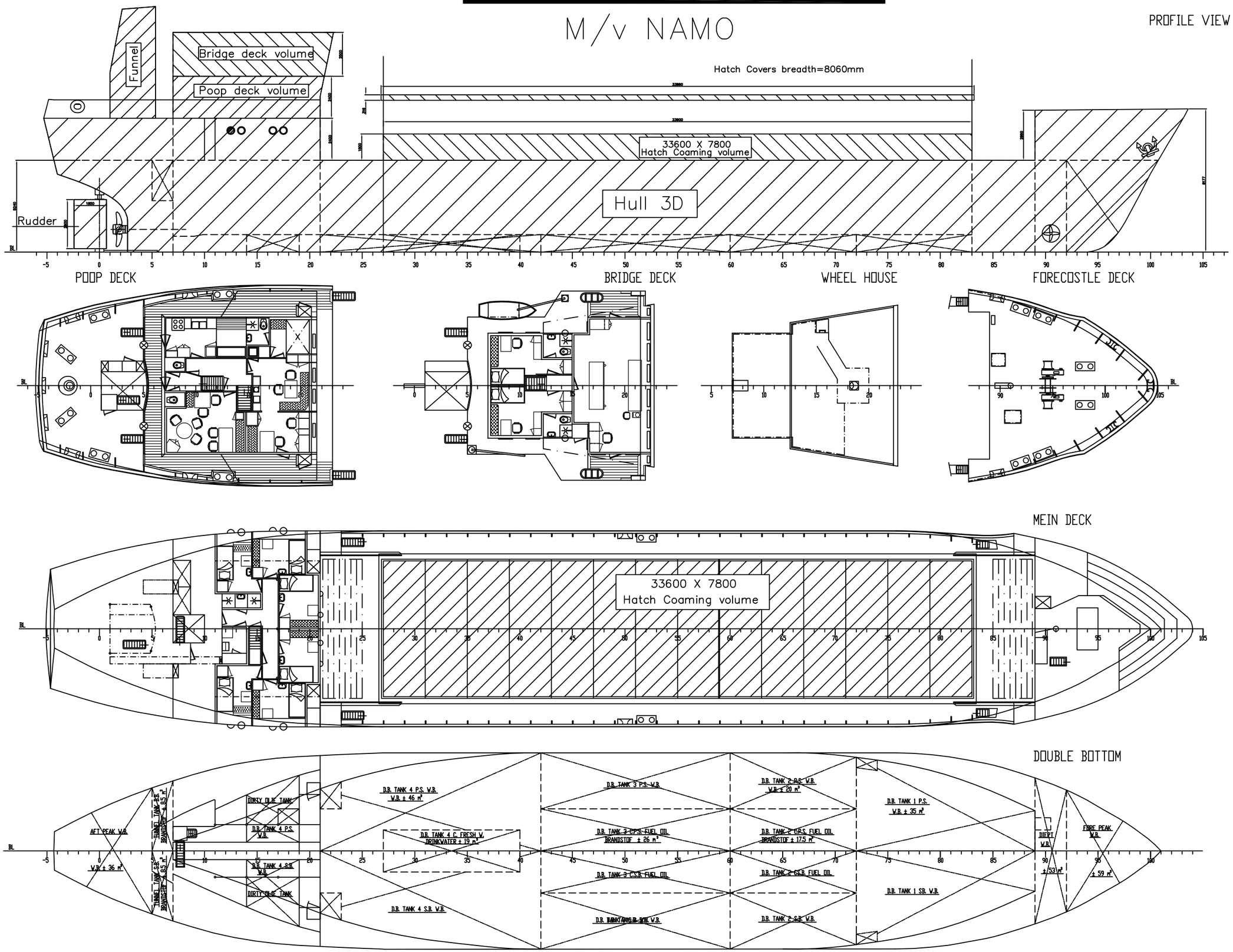

GENERAL ARRANGEMENT
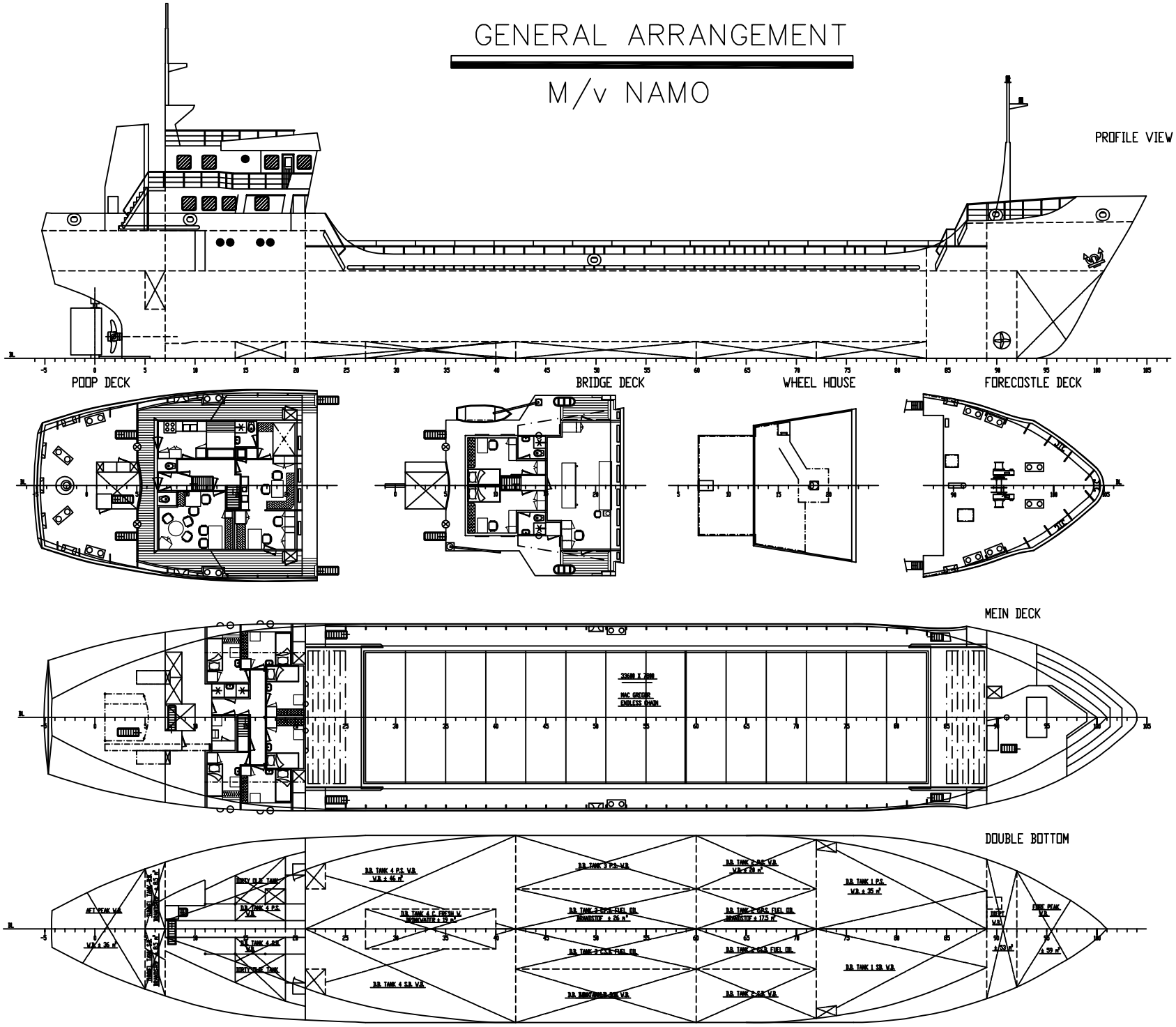
M/v NAMO