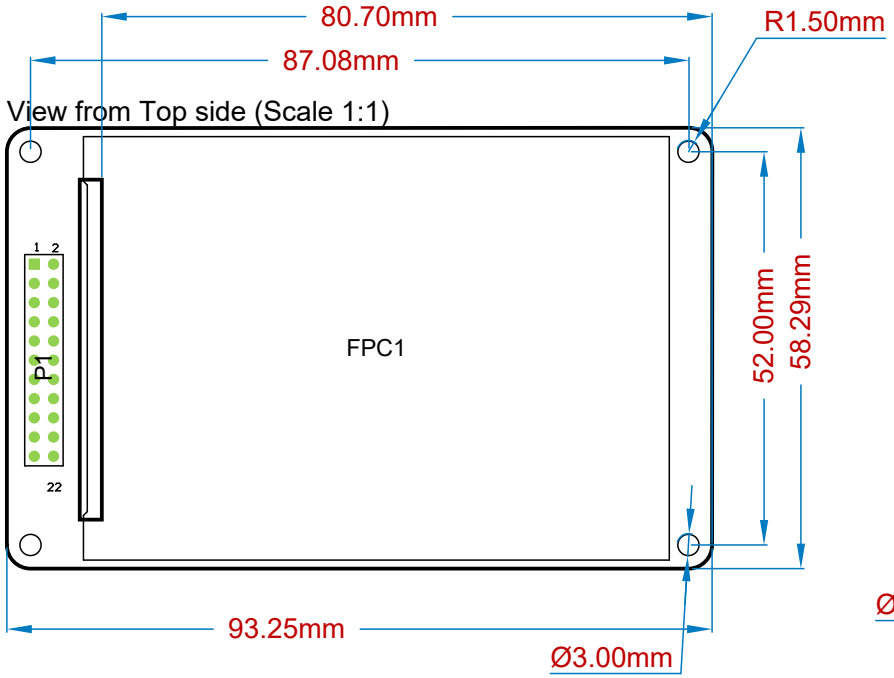

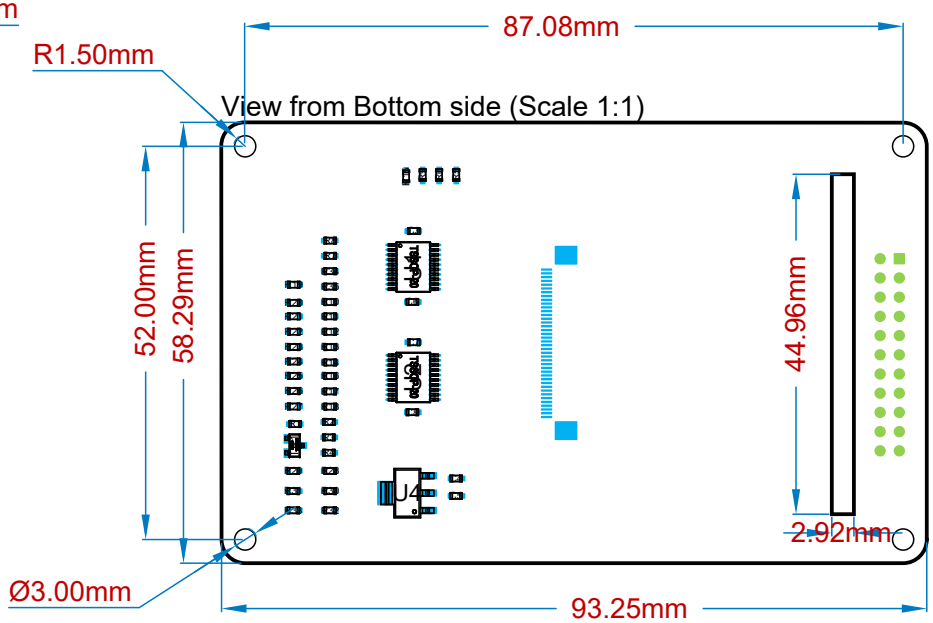

Realistic View
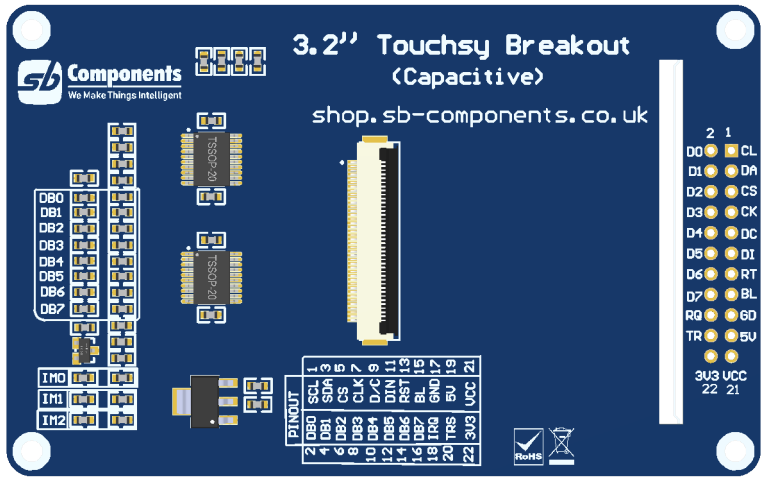
Realistic View