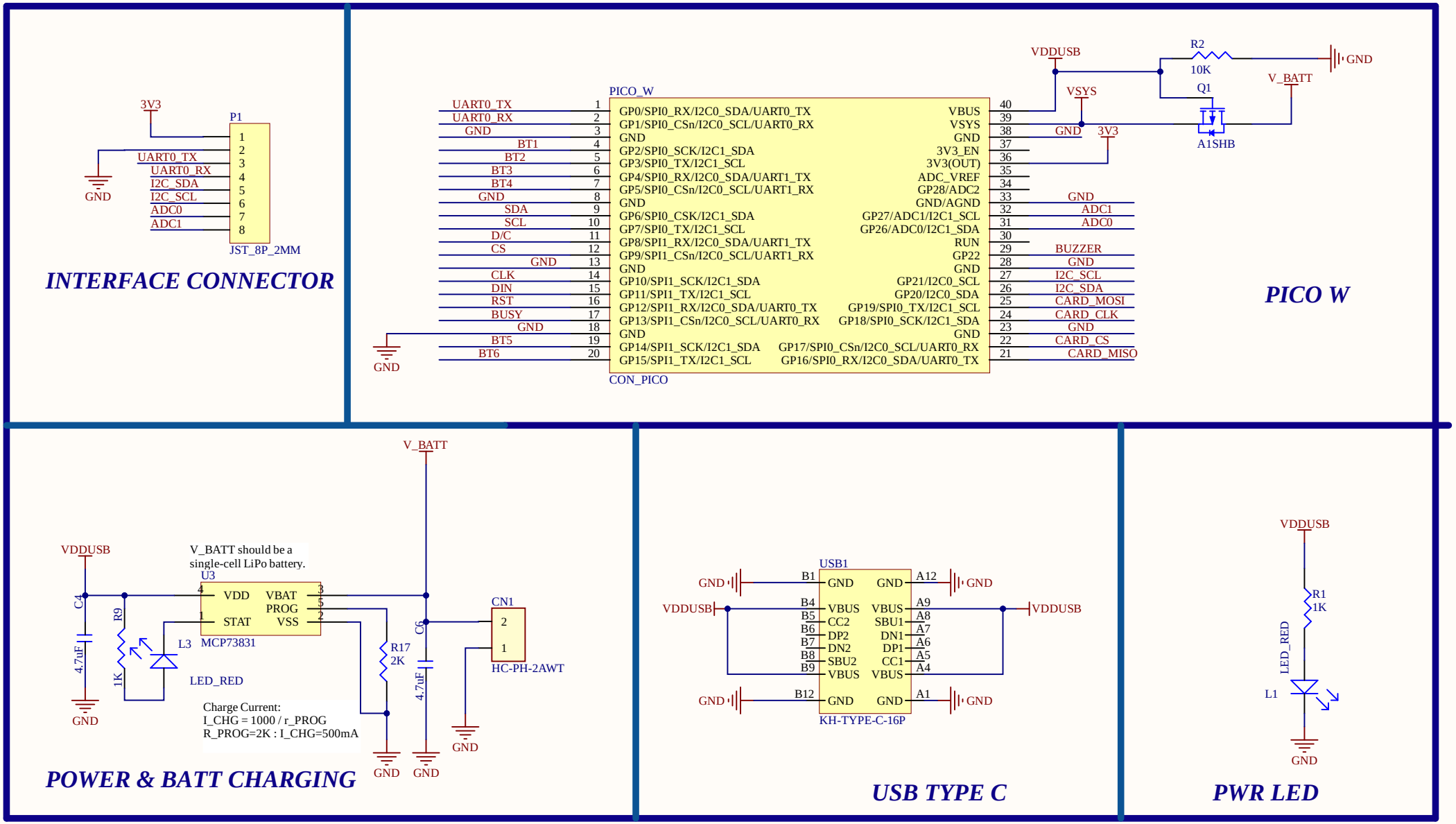

EnkPi 4.2"				
Size: A4	Revision: V1.0	Sheet: 1/2	SB Component Ltd. Kemp House, 152-160, London EC1V 2NX.	Cannot open file C:\Users\DEEPAK\Downloads\SB logo.png. File does not
Date: 14-02-2023	Time: 12:19:05	DrawnBy:		

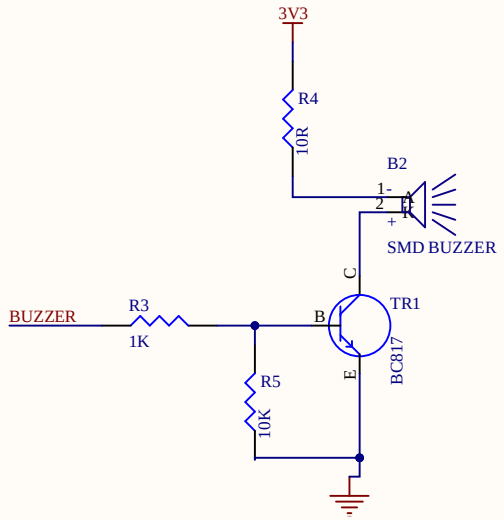

BUZZER

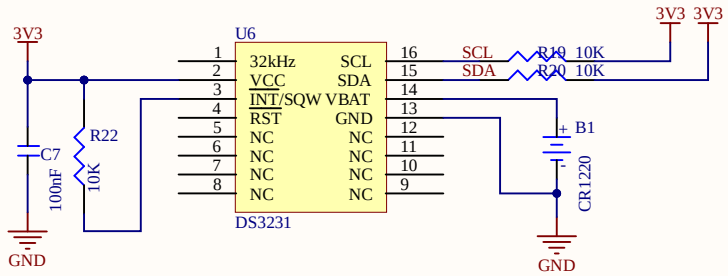

RTC

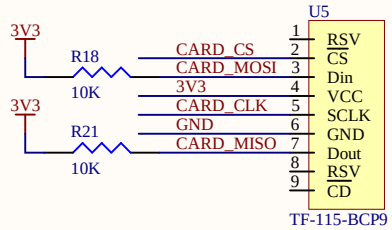

SD CARD

4.2_Inch E-Paper

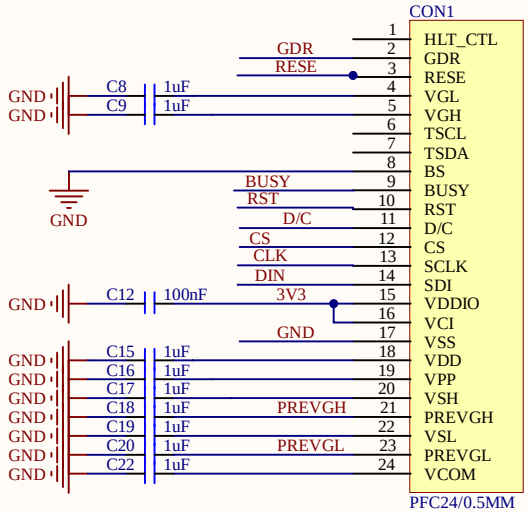

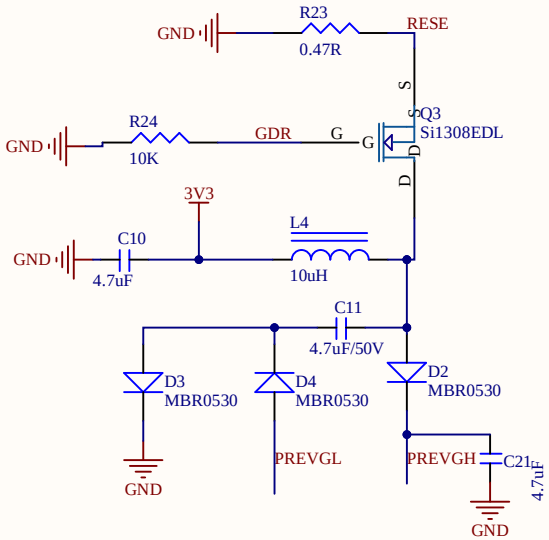

BUTTONS

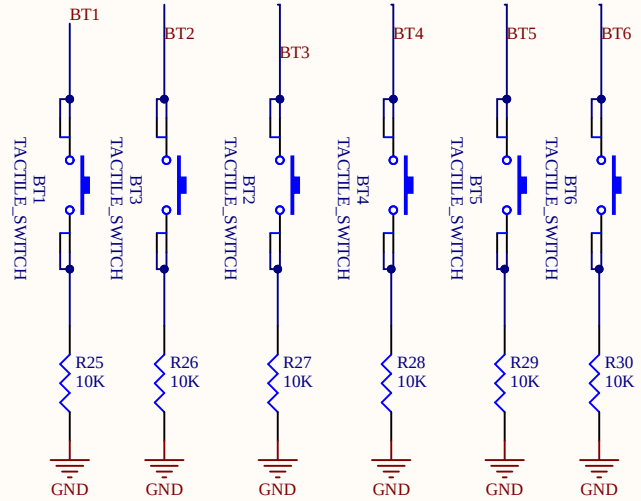

EnkPi 4.2"				Cannot open file C:\Users\DEEPAK\Downloads\SB logo.png. File does not
Size: A4	Revision: V1.0	Sheet: 2/2	*SB Component Ltd.*	
Date: 14-02-2023	Time: 12:19:05	DrawnBy:	*Kemp House, 152-160, London EC1V 2NX.*	