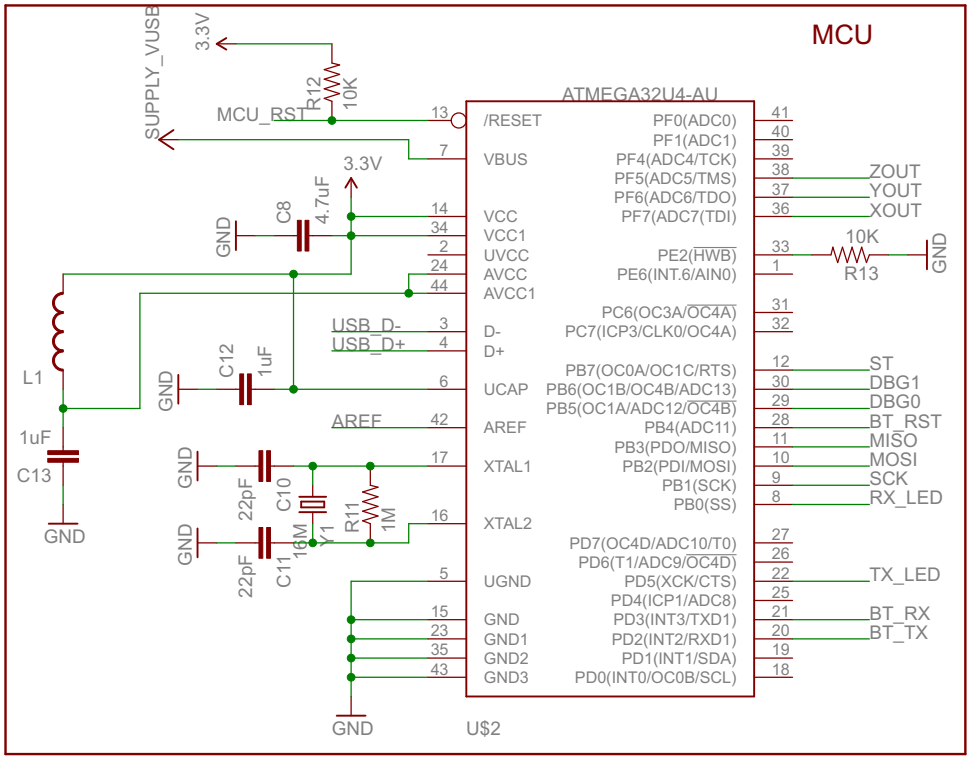

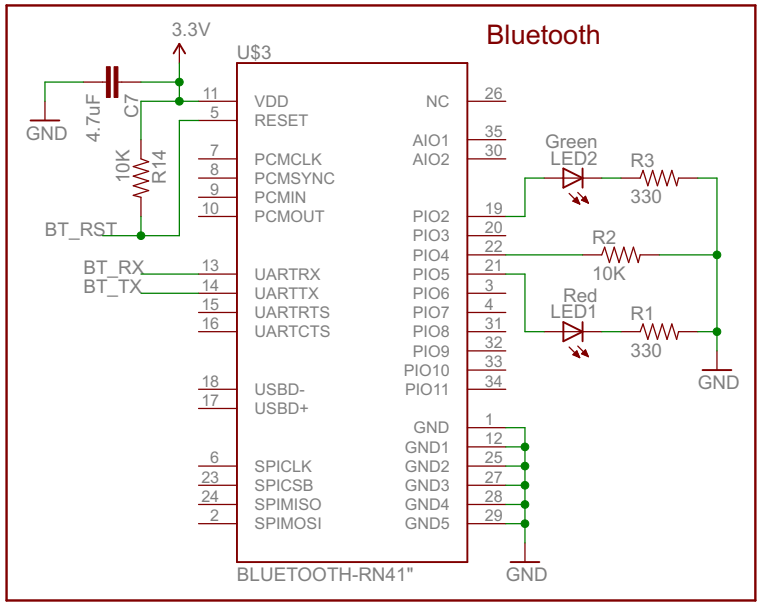

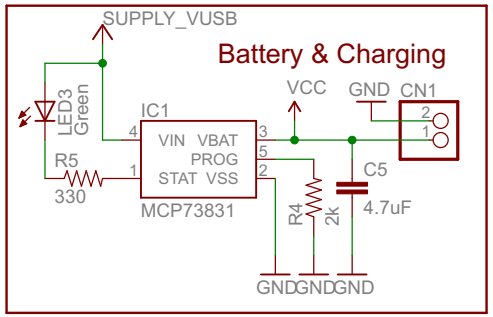

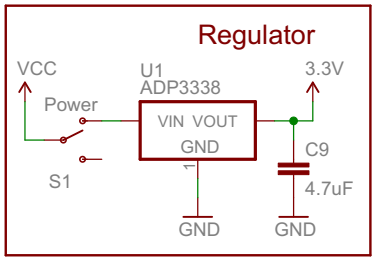

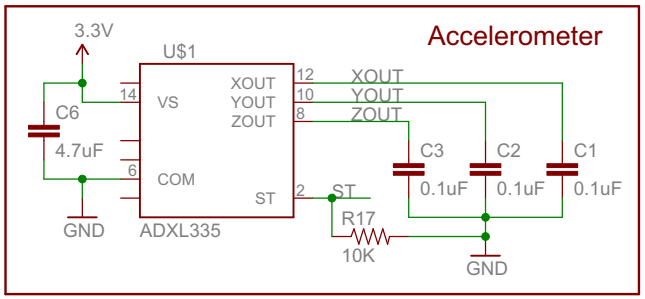

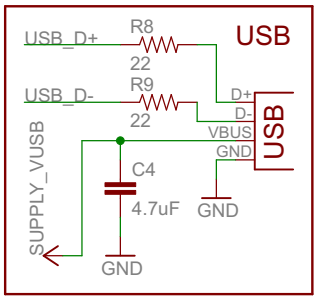

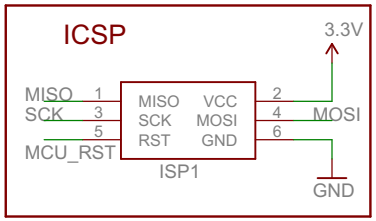

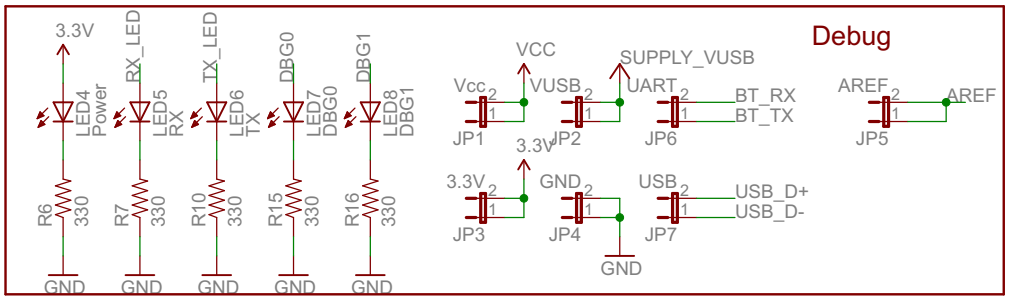

Copyright (c) 2013 Sean Watson
This work is licensed under the Creative Commons Attribution 3.0 Unported License. To view a copy of this license, visit http://creativecommons.org/licenses/by/3.0/

ECE 4416 Design Project:
Wireless Control Utilizing Head Movement

TITLE: sw-4416-project-v1

Document Number:

REV: A

Date: Sep 24/12

Sheet: 1/1