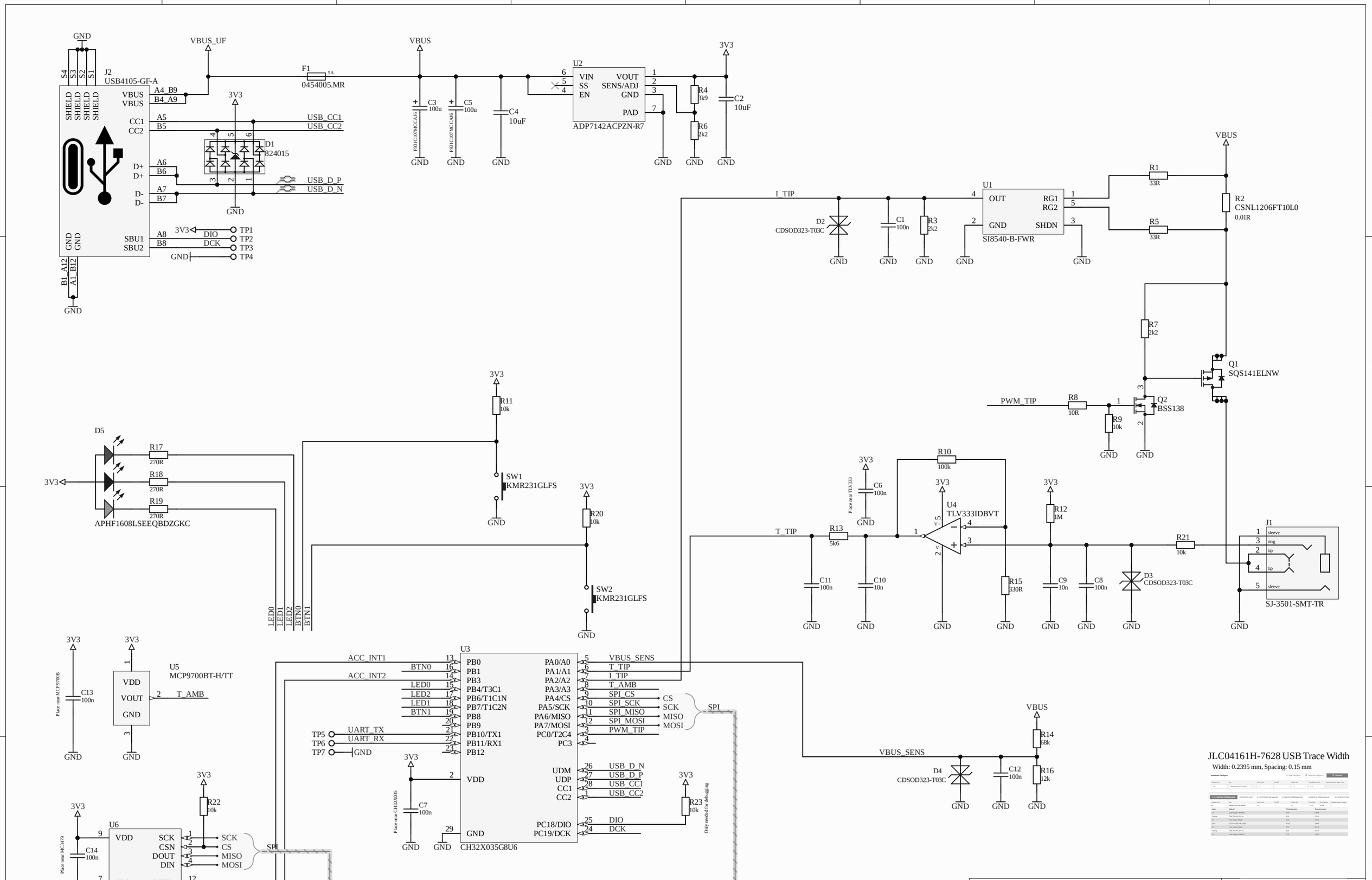

Title:	*Open RT Pen*		
Description:	*Another RT Pen with USP-PD*		
Name:	*Samuel K.*	Checked:	-
Size: *A3*	Number: *1*	Revision:	*A.1*
Date: *11.04.2024*	Time: *22:15:55*	Sheet *1* of *1*	
File:	*E:\open-rt-pen\electronics\open-rt-pen.SchDoc*		

OST Ostschweizer Fachhochschule

OST Ostschweizer Fachhochschule
Werdenbergstrasse 4
9471 Buchs Switzerland