ITEM	PartNo	DESCRIPTION	QTY.
1	26501	Nema 17 Stepper	1
2	70782	Direct Drive Roller	1
3	35001	Ball Bearing 1/8 ID x 3/8 OD x 0.156 W	1
4	70603	EZR STRUDER SPRING LEVER	1
5	30318	M3-.05 x 10mm L Phillip Pan Head	4
6	70601	EZR BASE	1
7	70602	EZR COVER TRANSPARENT	1
8	70710	HANDWHEEL	1
9	31248	Compression Spring	1
10	86019	EZR Struder ERIS MOUNT	1
11	30115	6-32 x 7/8"L Phillip Pan Head	2
12	30164	6-32 Nylon Lock Nut	2
13	70621	PTC FOR EZR	1

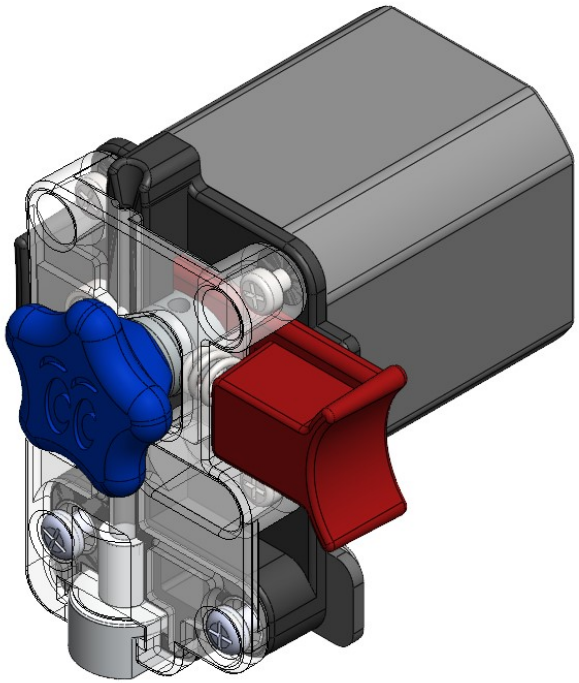

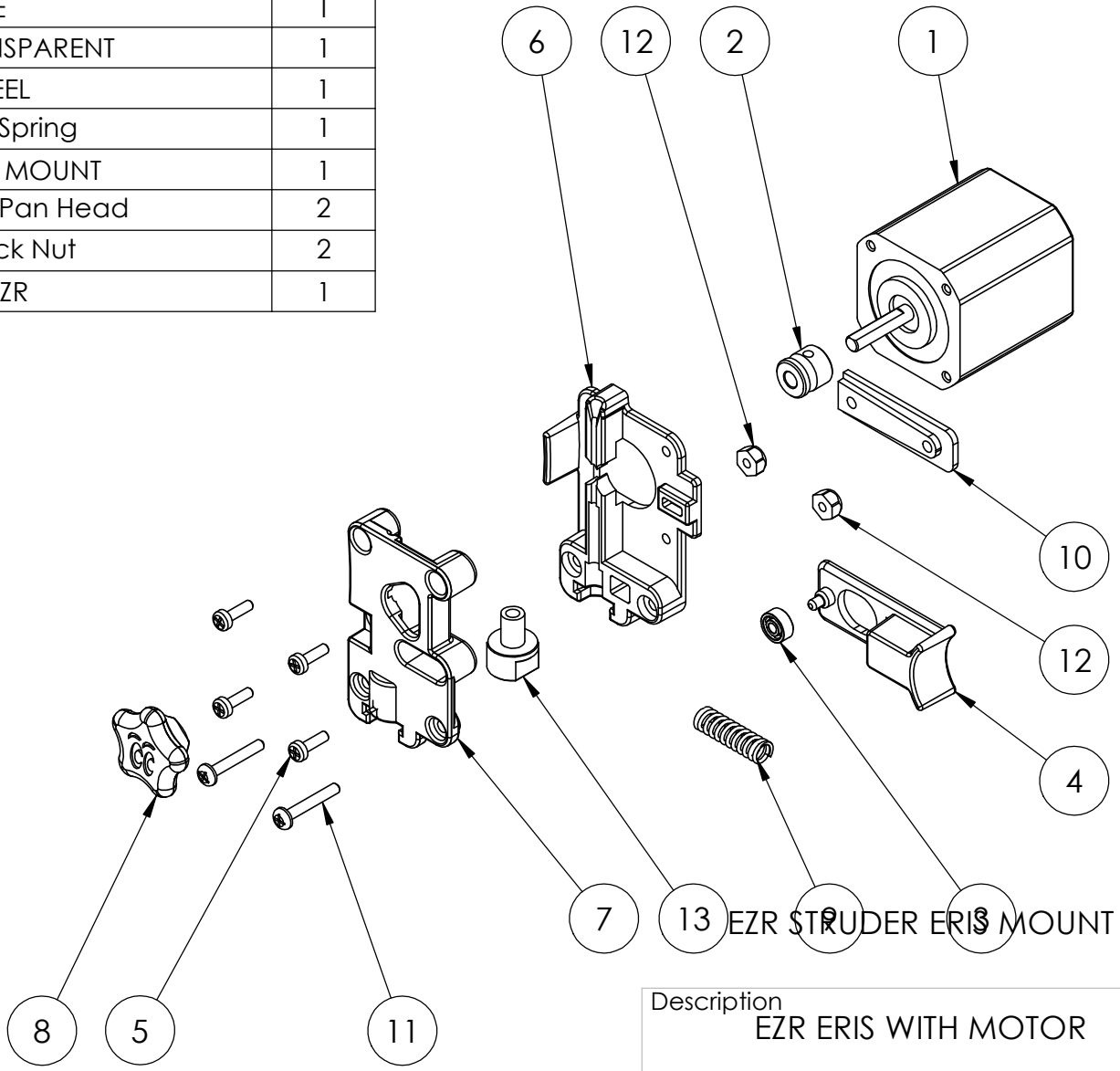

EZR STRUDER ERIS MOUNT

Description
EZR ERIS WITH MOTOR

SeeMeCNC®
3D Printers & More

Part No.
70699