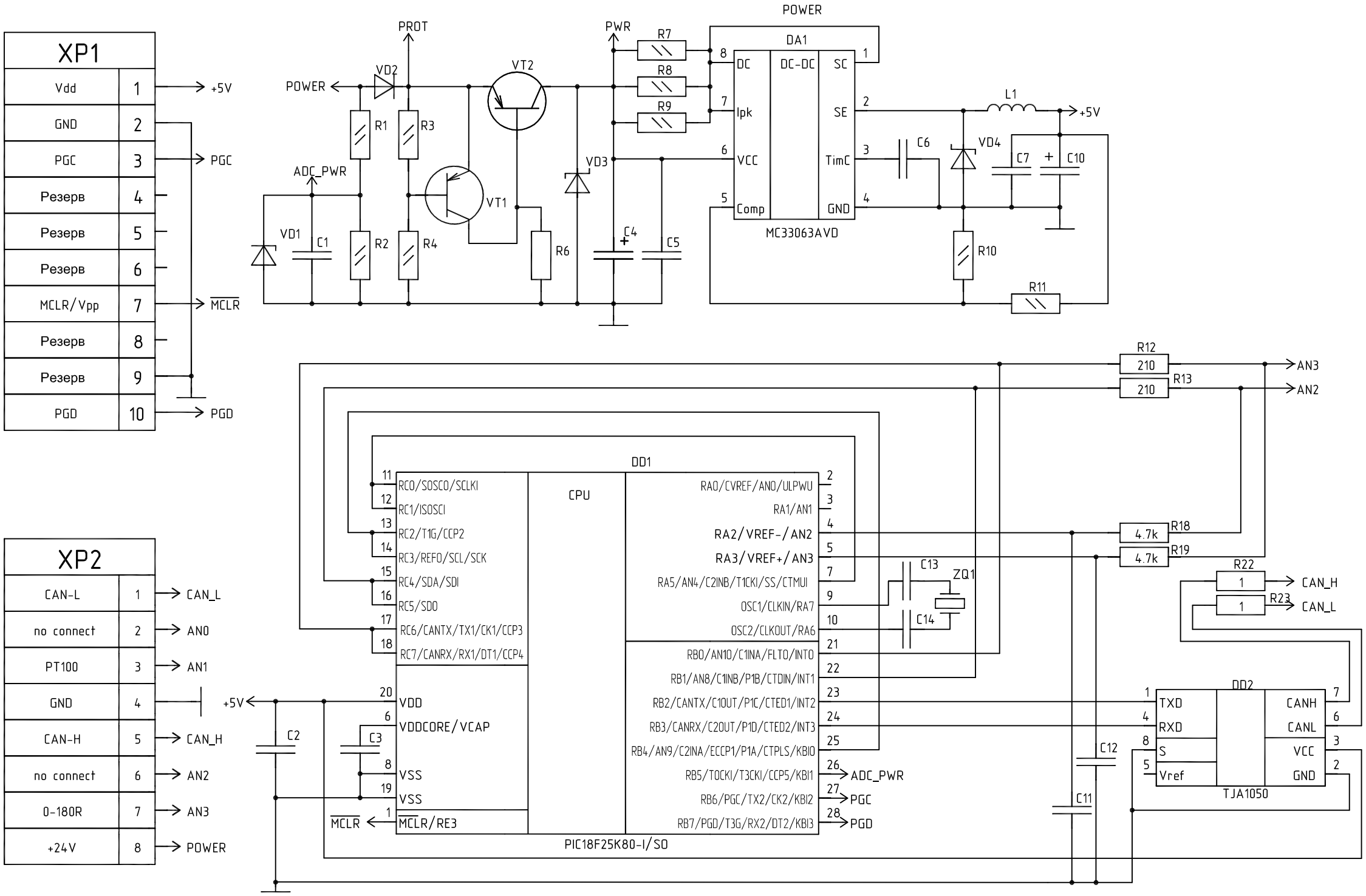

					ЗПМ.499.448 Э3