INSTITUTE OF INFORMATION TECHNOLOGY

JAHANGIRNAGAR UNIVERSITY

3RD 2ND SEMISTER FINAL EXAMINATION-2016

COURSE CODE: IT-3201 COURSE TITLE: SOFTWARE ENGINEERING

TOTAL MARKS: 60 TIME: 3 HOURS

ANSWER ANY FIVE (5) QUESTIONS

1. a) Describe the main processes in a modern software development environment, and the tools used to support them. 4

   b) What is black-box and white-box testing? 2

   c) You are developing control software for a car whose latest model will have a network connection. Software upgrades will be delivered over the air rather than at service visits, so that any security vulnerabilities can be patched quickly. This in turn means that you will have to provide patches, to deal with both security and safety issues for the next 25 years. Discuss how this is likely to affect you development process and the implications it will have for costs. 6

2. a) The optimistic, most likely and pessimistic times of the activities of a project are given below. Activity (40-50) must not start before 22 days, while activity (70-90) must end by 35 days. The scheduled completion time of the project is 46 days. 10

   i. Draw the project activity network.

   ii. Determine the critical path.

   iii. What is the probability of completing the project in scheduled time?

| *Activity.* | $t_o$-$t_m$-$t_p$ | *Activity* | $t_o$-$t_m$-$t_p$ |
|---|---|---|---|
| 10-20 | 4-8-12 | 50-70 | 3-6-9 |
| 20-30 | 1-4-7 | 50-80 | 4-6-8 |
| 20-40 | 8-12-16 | 60-100 | 4-6-8 |
| 30-50 | 3-5-7 | 70-90 | 4-8-12 |
| 40-50 | 0-0-0 | 80-90 | 2-5-8 |
| 40-60 | 3-6-9 | 90-100 | 4-10-16 |

   b) What is the critical distinction between a milestone and a deliverable? 2

CamScanner

3. a) www.fruity.com is an e-commerce site to sell best and fresh local fruit in the market. It the following component to develop to make it more powerful in the market. They wanted to develop a supply chain management system. Draw the sequence diagram for the following component.

1. Workforce registration
2. Location tracking
3. Tracking by the online customer
4. Tracking by the fruit supplier
5. Payment method to delivery man.

b) An offshore company has taken a software development task to complete within 36 month. The company has 20 programmers consisting of 7 fresher's and 10 programmers are already working in another project also which will be finished very soon. Organization facing some financial problem to recruit expert programmers. The customer did not get any fixed timing of delivery but the offer of software is very attractive. Do you think company will approach the work immediately? If Yes, then what are the possible impediments and how the PM will approach? 5

4. a) A software firm has a project which will be done by 14 months. Figure shows the people needed for the project. Find the minimum number of staff needed for this project to finish in stimulated period. Also explain the appointment process of staff in this project. 8

| Activity | Dependencies | Duration | People |
|---|---|---|---|
| A | -- | 4 | 2 |
| B | -- | 4 | 1 |
| C | -- | 4 | 2 |
| D | A | 2 | 5 |
| E | B | 3 | 2 |
| F | C | 2 | 2 |
| G | D | 3 | 5 |
| H | G | 5 | 3 |

b) What are the functional and non-functional requirements of bus ticketing system? 4

5. a) Write a short note on COCOMO2 software cost estimation process. 4

b) Give three reasons why algorithmic cost estimates prepared in different organizations are not directly comparable. 3

c) Justify the following: 5

i. Adding more people to a late project can make it later.

ii. Early cost prediction is sometimes goes wrong without historical data analysis.

iii. Cost prediction is a risk.

CamScanner

```
i=1;
total.input=total.valid=0;
sum=0;

DO WHILE value[i] < > -999 AND total.input<100
        increment total.input by 1;
        IF value[i] >= minimum AND value[i] <= maximum
         THEN increment total.valid by 1;
              Sum = sum + value[i];
         ELSE skip
        ENDIF
        Increment by 1;
END DO
IF total.valid>0
    THEN average = sum/total.valid;
ELSE average=-999
ENDIF
END average
```

The above sample program is written for some functionality in a large activity. Find the following:

i. Cyclomatic complexity of the program and verify with different formulae using control flow graph.

ii. Write a test case for each path.

b) Describe stub and driver in integration testing approaches with example. 4

7. a) Explain what is meant by software product complexity, and demonstrate how measures of module coupling, cohesion, and size can help the engineer monitor the build quality of software. 5

b) Functionality is one of the most important software quality characteristics. It has been suggested that the functionality is influenced by the following software quality sub-characteristics: suitability, accuracy, interoperability and security. Justify this claim. 2

b) Which of the following software quality characteristics are easier to measure: Efficiency or functionality, Efficiency or reliability? Justify your answer. 2

c) Draw a diagram showing the operation of a typical batch application. Then draw a diagram showing the operation of a typical online application. Discuss how they are similar and how they are different. 3

CamScanner

INSTITUTE OF INFORMATION TECHNOLOGY

JAHANGIRNAGAR UNIVERSITY

3RD YEAR 2ND SEMISTER B.Sc. (HONS.) FINAL EXAMINATION-2020

Session: 2017-2018

COURSE CODE: IT-3201 COURSE TITLE: Software Engineering

TOTAL MARKS: 60 TIMES: 3 hours

ANSWER ANY FIVE (5) QUESTIONS

1. (a) What are the SPM failures causes for a project? 4

(b) Draw the network diagram of the following project task and also find CP, SLACK time. 8

| Activity | Dependency | Duration (weeks) |
|---|---|---|
| A | - | 7 |
| B | A | 8 |
| C | A | 10 |
| D | A | 6 |
| E | A | 2 |
| F | B,C | 5 |
| G | F,D,E | 8 |
| H | E | 7 |
| I | F | 5 |
| J | I,G,H | 2 |

2. (a) Draw the conceptual view of software estimation techniques? 4

(b) Compute the function point, productivity, documentation, cost per function for the following data: 8

Number of user inputs = 24
Number of user outputs = 46
Number of inquiries = 8
Number of files = 4
Number of external interfaces = 2
Effort = 36.9 p-m
Technical documents = 265 pages
User documents = 122 pages
Cost = $7744/ month
Various processing complexity factors are: 4, 1, 0, 3, 3, 5, 4, 4, 3, 3, 2, 2, 4, 5.
Use the following historical weighting factor table to calculate FP.

| Serial | Measurement Parameter | Low | Average | High |
|---|---|---|---|---|
| 1 | Number of External Inputs(EI) | 7 | 10 | 15 |
| 2 | Number of External Outputs(EO) | 5 | 7 | 10 |
| 3 | Number of External Inquiries(EQ) | 3 | 4 | 6 |
| 4 | Number of Internal Files(ILF) | 4 | 5 | 7 |
| 5 | Number of External Interfaces(EIF) | 3 | 4 | 6 |

3. (a) How agile and waterfall differ to each other in term of developing an e-commerce website? Discuss the Scrum Process model with the Table of Question 2 (b) 6

CamScanner

(b) What is functional and non-functional testing? Find the Mecabe Cyclometric path for the following illustration.

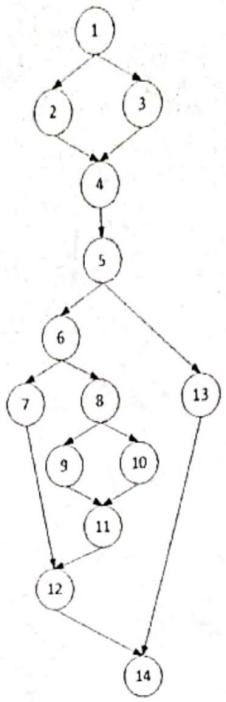


4 (a) What is use case? How use case help to find the function of the system? 4

(b) Mr. Karim has a grocery store in Savar area. During the Corona pandemic, often customers call him to look for some products. But he is a lonely man, so he can't get over it. He is illiterate so he can't even write. He wants an online solution. 8

i. What will be the online product for him?

ii. What are the user requirements and system requirements?

iii. Draw use case diagram for the system? (Registration, Login, Product list, Reports)

5 (a) "Non-functional requirements may affect the overall architecture of a system rather than the individual components"- justify the statement. 4

(b) Categories non-functional requirements. How office space effect the overall software development in costing? 4

(c) What are the Metrics for specifying nonfunctional requirements? 4

6 (a) How the context model and process model are different? What are the signifiers of those models? 4

(b) App product will bring a digital change in the buying and selling of small shop and wholesale traders. It will handle all processes including Total Business Trade, Transaction Process, Delivery, Company Product Order, Market Management by a digital software and machine to protect consumers sometimes buy adulterated, unhealthy products, or unknowingly buy illegal products. A special feature of the app id that if a product falls below a certain limit, the order will go to the supplier through the software. And after they deliver it, the cache memo will be sent through the software, the scanner will scan it and the receiver software will enter the data in its reference. And if the shopkeeper sells the product, a total account will be made of it. And the weight will be packaged. 4

i. Draw a wireframe of the product.

ii. Draw a process model of the special feature.

7 (a) Discuss about the 4+1 architectural view model of software architecture. 3

(b) What do you understand from MVC architectural pattern? Explain that with a conceptual view of it. 7

(c) How system functionalities are distributed in the layered architecture? 2

CamScanner

Institute of Information Technology
Jahangirnagar University
THIRD YEAR SECOND SEMESTER B.SC (HONS) FINAL EXAMINATION, 2017
[In Information Technology]

Course Code: IT 3201 | Time: 3 Hours
Course Title: Software Engineering | Full Marks: 60

Answer any **5 (five)** of the following questions. Figures in the right margin indicate marks.

---

1. a) Write the agile manifesto. How extreme programming values agile manifesto? 5
   b) How scrum development process works? Why XP@Scrum get popular among developers? 5
   c) Write the outcome of the different burn down charts. 2

2. a) How can we classify requirements? Give example of each type. 4
   b) Show the UML representation of the following relations: 4
      i. In a shopping mall "*customer checkout*" use case is composed of "*Scan Item*", "*Calculate Total and Tax*" and "*Payment*" use cases.
      ii. "*Payment*" use case can use "*Customer authentication*" use case to complete its operation.
      iii. "*Customer authentication*", responsible for verifying the identity of the customer. The customer might require *[one of]* two realizations: "*CheckPassword*" or "*CheckFingerprint*".
   c) How many types of classes can be identified during analysis? Draw a class diagram from the following sequence diagram in fig. 1: 4

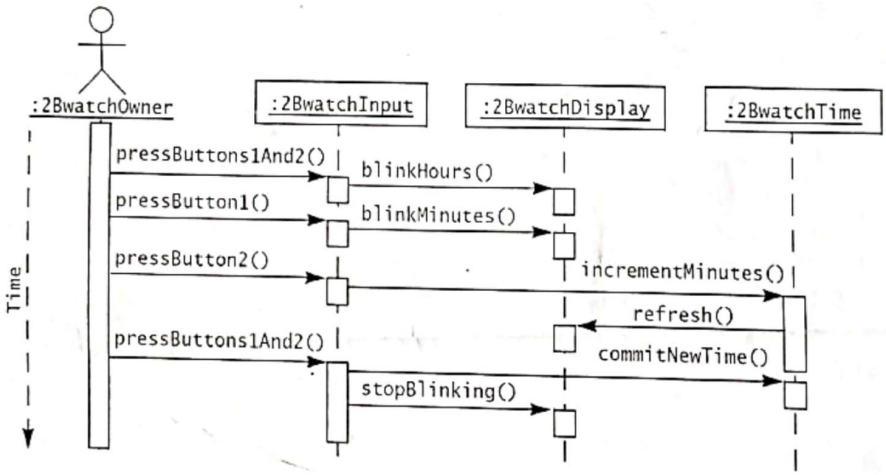


Fig.1: Example of Sequence Diagram

3. A software company engaged in Object Oriented development has been collecting both software product metrics and software process metrics over a number of years.
   a) Explain what is meant by software product metrics and give three examples of product metrics relating to OO software. 4
   b) Explain what is meant by process metrics and give examples of three such metrics relevant to a software company's process improvement. 4
   c) Explain what is meant by the Goal Question Metric (GQM). Outline how GQM and both software product metrics and software process metrics can be used in a company's efforts to determine and to improve their software quality 4



CamScanner

4. a) Consider a system that includes a Web server and two database servers. Both database servers are identical: the first acts as a main server, and the second acts as a redundant back-up in case the first one fails. Users use Web browsers to access data through the Web server. They also have the option of using a proprietary client that accesses the databases directly. Draw a UML deployment diagram representing the hardware/software mapping of this system.

b) Why do we need structural partitioning? Which type of partitioning in useful for agile? 4

c) Write the names of different cohesions. Why should we increase cohesion for good design? 4

5. a) Show the software architecture of an ATM system. 2

b) Show the expression of calculating Error Index (EI). 2

c) Show the risk management process. 2

d) How many types of plan you need to do for software development? 2

e) For the given table below shows the tasks, durations and dependencies. Draw a task network and then find the critical path from the network. 4

| Task | Effort (person-days) | Duration (days) | Dependencies |
|---|---|---|---|
| T1 | 15 | 10 | |
| T2 | 8 | 15 | |
| T3 | 20 | 15 | T1 (M1) |
| T4 | 5 | 10 | |
| T5 | 5 | 10 | T2, T4 (M3) |
| T6 | 10 | 5 | T1, T2 (M4) |
| T7 | 25 | 20 | T1 (M1) |

6. a) What are the stages of Testing? Identify the following types of testing: 4

i. Testing the limits of system e.g. maximum number of users, peak demands, extended operation.

ii. Test the various software and hardware configurations

ii. Evaluate response times and time to perform a function

v. Exercise all input and output parameters of each component, all components and all calls (each component is called at least once and every component is called by all possible callers.)

b) Why developer or programmer shouldn't test the system? What are the differences between system testing and inspections? 4

c) Explain the modified sandwich testing strategy and compare it with the other strategies. 4

7. Computer-Aided Software Engineering (CASE) tools are designed to help developers manage complexity.

a) What are the two main types of complexity such a tool must deal with? 3

b) What are the tools traditionally used to manage each type of complexity? 4

c) For each type, describe briefly one case history in which a serious failure was caused. 5



CamScanner

INSTITUTE OF INFORMATION TECHNOLOGY
JAHANGIRNAGAR UNIVERSITY
3RD YEAR 2ND SEMISTER FINAL EXAMINATION-2014

COURSE CODE: IT-3201 COURSE TITLE: SOFTWARE ENGINEERING
TOTAL MARKS: 60 TIME: 3 HOURS

ANSWER ANY FIVE (5) QUESTIONS

1. a) A software firm wants to implement a SDLC model in their recent project. But problem is that the project has no concrete budget, time and functional specification. But the client wants to pay what they demand. Now company decided to develop the software with a SDLC model. Which model will be most application for this type of risk oriented project? Compare your mentioned model with others in short. 6

b) Explain why programs which are developed using evolutionary development are likely to be difficult to maintain. 3

c) Show the steps of the software development life cycle with a brief description. 3

2. a) The optimistic, most likely and pessimistic times of the activities of a project are given below. Activity (40-50) must not start before 22 days, while activity (70-90) must end by 35 days. The scheduled completion time of the project is 46 days. 9

i. Draw the project activity network.

ii. Determine the critical path.

iii. What is the probability of completing the project in scheduled time?

| *Activity* | $t_o$-$t_m$-$t_p$ | *Activity* | $t_o$-$t_m$-$t_p$ |
|---|---|---|---|
| 10-20 | 4-8-12 | 50-70 | 3-6-9 |
| 20-30 | 1-4-7 | 50-80 | 4-6-8 |
| 20-40 | 8-12-16 | 60-100 | 4-6-8 |
| 30-50 | 3-5-7 | 70-90 | 4-8-12 |
| 40-50 | 0-0-0 | 80-90 | 2-5-8 |
| 40-60 | 3-6-9 | 90-100 | 4-10-16 |

b) What is the critical distinction between a milestone and a deliverable? Is it possible to issue a deliverable before certain milestone? If Yes justify your answer. 3



CamScanner

3. a) A software project has the following activities and management asked the project manager reduce time to be done in earliest possible time. What will be the final cost of least software development time?

| Activity | dependencies | Normal time | Crash time | Normal Cost | Crash Cost |
|---|---|---|---|---|---|
| A | -- | 4 | 2 | 10000 | 11000 |
| B | A | 3 | 2 | 6000 | 9000 |
| C | A | 2 | 1 | 4000 | 6000 |
| D | B | 5 | 3 | 14000 | 18000 |
| E | B,C | 1 | 1 | 9000 | 9000 |
| F | C | 3 | 2 | 7000 | 8000 |
| G | E,F | 4 | 2 | 13000 | 25000 |
| H | D,F | 4 | 1 | 11000 | 18000 |
| I | H,G | 6 | 5 | 20000 | 29000 |

b) An offshore company has taken a software development task to complete within 36 month. The company has 20 programmers consisting of 7 fresher's and 10 programmers are already working in another project also which will be finished very soon. Organization facing some financial problem to recruit expert programmers. The customer did not get any fixed timing of delivery but the offer of software is very attractive. Do you think company will approach the work immediately? If Yes, then what are the possible impediments and how the PM will approach? 5

4. a) A software firm has a project which will be done by 14 months. Figure shows the people needed for the project. Find the minimum number of staff needed for this project to finish in stimulated period. Also explain the appointment process of staff in this project. 8

| Activity | Dependencies | Duration | People |
|---|---|---|---|
| A | -- | 4 | 2 |
| B | -- | 4 | 1 |
| C | -- | 4 | 2 |
| D | A | 2 | 5 |
| E | B | 3 | 2 |
| F | C | 2 | 2 |
| G | D | 3 | 5 |
| H | G | 5 | 3 |

b) Why open-plan and communal offices sometimes less suitable for software development than individual offices? Under what circumstances do you think that open-plan environments might be better? 4

5. a) A business application having 32200 lines of code needed. The disproportionate effort of the project is 0.39. Determine: 4

i. Effort of the project

ii. Time consumption needed for the project using COCOMO2 formulae.



CamScanner

...e three reasons why algorithmic cost estimates prepared in different organizations are not directly comparable. 3

c) Justify the following: 5

i. Adding more people to a late project can make it later.

ii. Early cost prediction is sometimes goes wrong without historical data analysis.

iii. Cost prediction is a risk.

6. a) 8

```
i=1;
total.input=total.valid=0;
sum=0;

DO WHILE value[i] < > -999 AND total.input<100
        increment total.input by 1;
        IF value[i] >= minimum AND value[i] <= maximum
                THEN increment total.valid by 1;
                        Sum = sum + value[i];
                ELSE skip
        ENDIF
        Increment by 1;
END DO
IF total.valid>0
        THEN average = sum/total.valid;
ELSE average=-999
ENDIF
END average
```

The above sample program is written for some functionality in a large activity. Find the following:

i. Cyclomatic complexity of the program and verify with different formulae using control flow graph.

ii. Write a test case for each path.

b) What is the overall strategy for software testing? What do you mean by regression testing? 4

7. a) What is risk in software engineering? Mention a strategic approach to software testing. 2

b) How many types of objects are there in an object model? Show how can we express them in UML? 4

c) Identify the appropriate relations among underlined objects and express them in diagrams: 6

i. Students can take highest four courses in a semester and each course contains 10 to 50 students.

ii. Two points make a line and more than three points make polygons.

iii. Person can be students, teachers and office stuffs. Students can be under grade students and post grade students. Teachers can be full time and part time. Office stuffs can be officers and support stuffs.



CamScanner