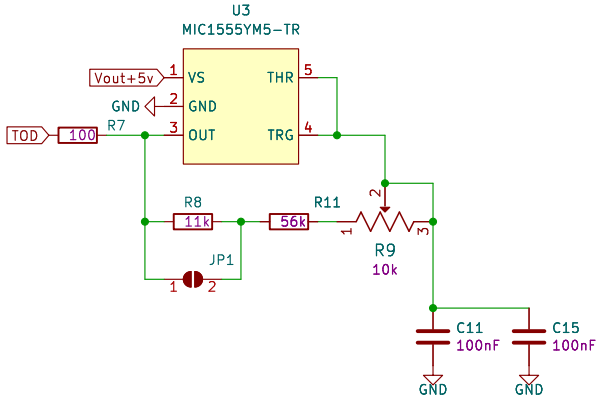

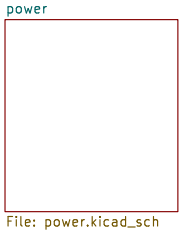

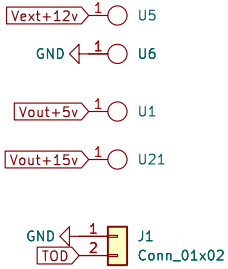

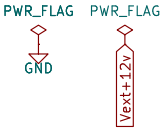

DC-64a © 2023 by Vittorio Pascucci (SideProjectsLab) is licensed under
CC BY-NC-SA 4.0. To view a copy of this license, visit:
http://creativecommons.org/licenses/by-nc-sa/4.0/

Sheet: /
File: dc_64a.kicad_sch

Title: DC-64a v0.2

Size: A5	Date: 2023-11-13	Rev:
KiCad E.D.A. kicad 7.0.6		Id: 1/2

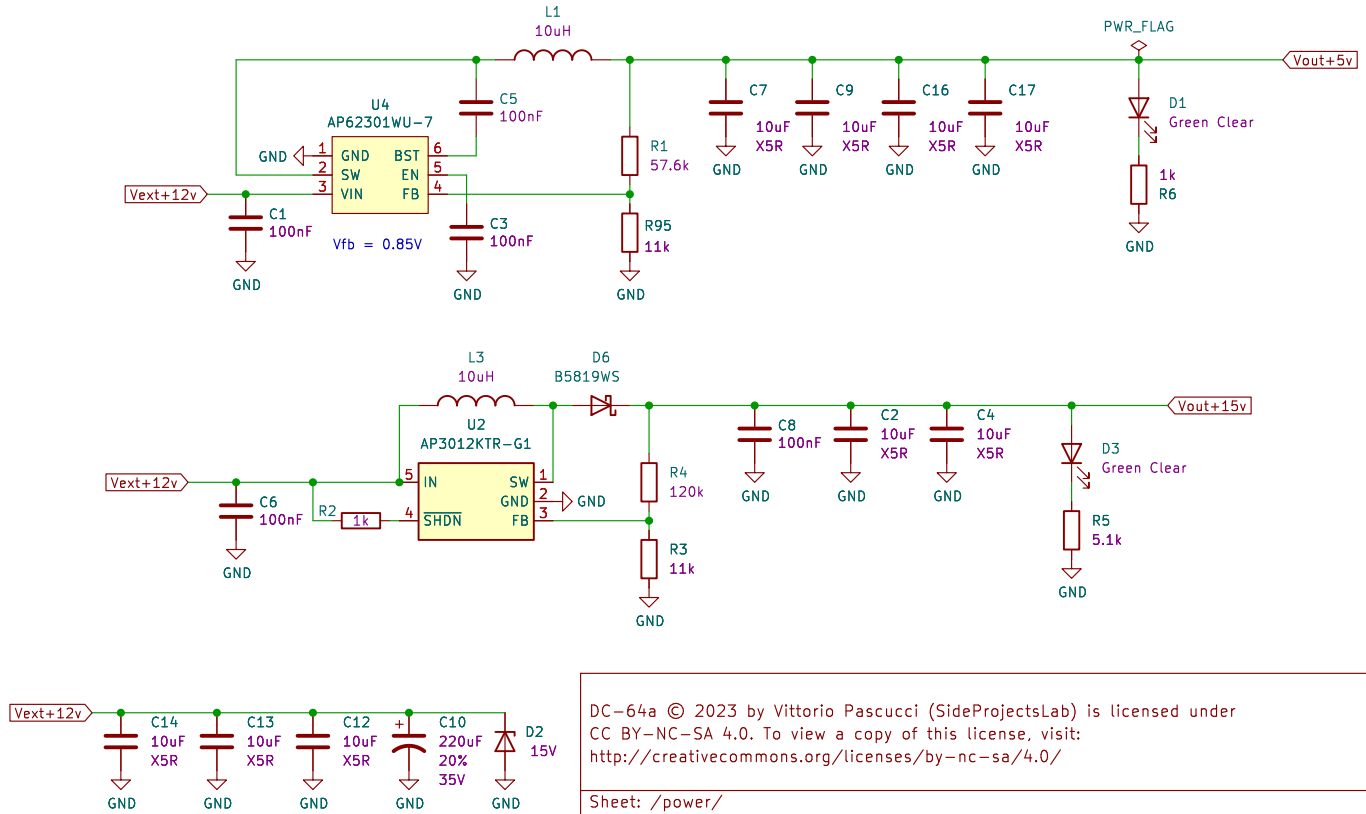

DC-64a © 2023 by Vittorio Pascucci (SideProjectsLab) is licensed under
CC BY-NC-SA 4.0. To view a copy of this license, visit:
http://creativecommons.org/licenses/by-nc-sa/4.0/

Sheet: /power/
File: power.kicad_sch

Title: DC-64a v0.2

Size: A5	Date: 2023-11-13	Rev:
KiCad E.D.A. kicad 7.0.6		Id: 4/2