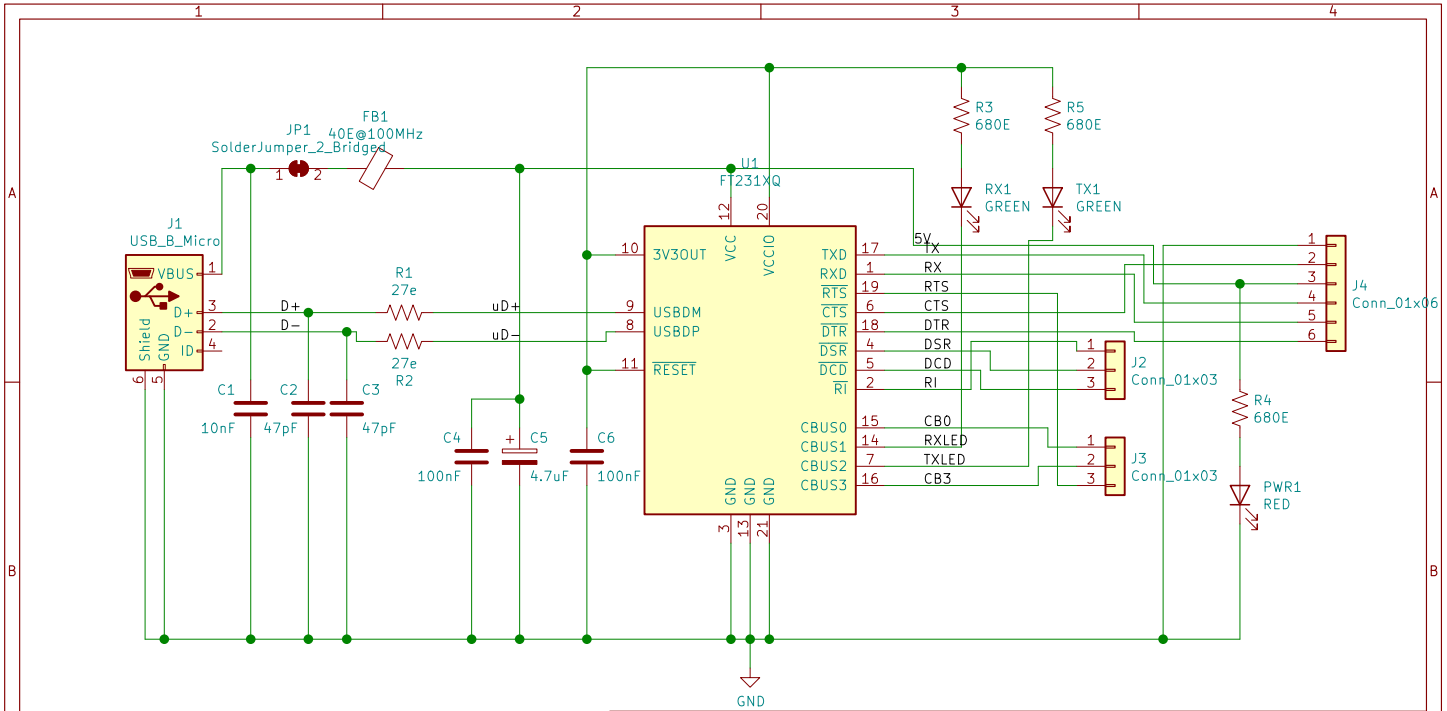

www.SirBoard.com

SirBoard

Sheet: /

File: FT231.sch

Title: USB to TTL Converter Based On The FT231XQ

Size: User	Date: 2019-07-16	**Rev: 1**
KiCad E.D.A. kicad (5.1.2)-2		Id: 1/1