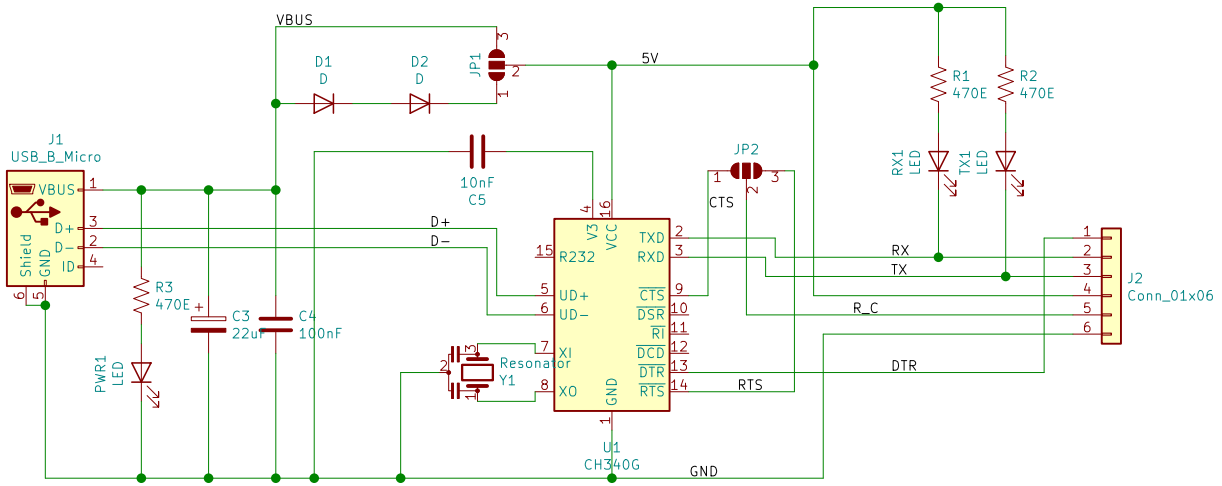

www.SirBoard.com

SirBoard

Sheet: /

File: CH340G.sch

Title: CH340G USB to TTL converter

Size: User	Date: 2019-07-16	**Rev: 1**
KiCad E.D.A. kicad (5.1.2)-2		Id: 1/1