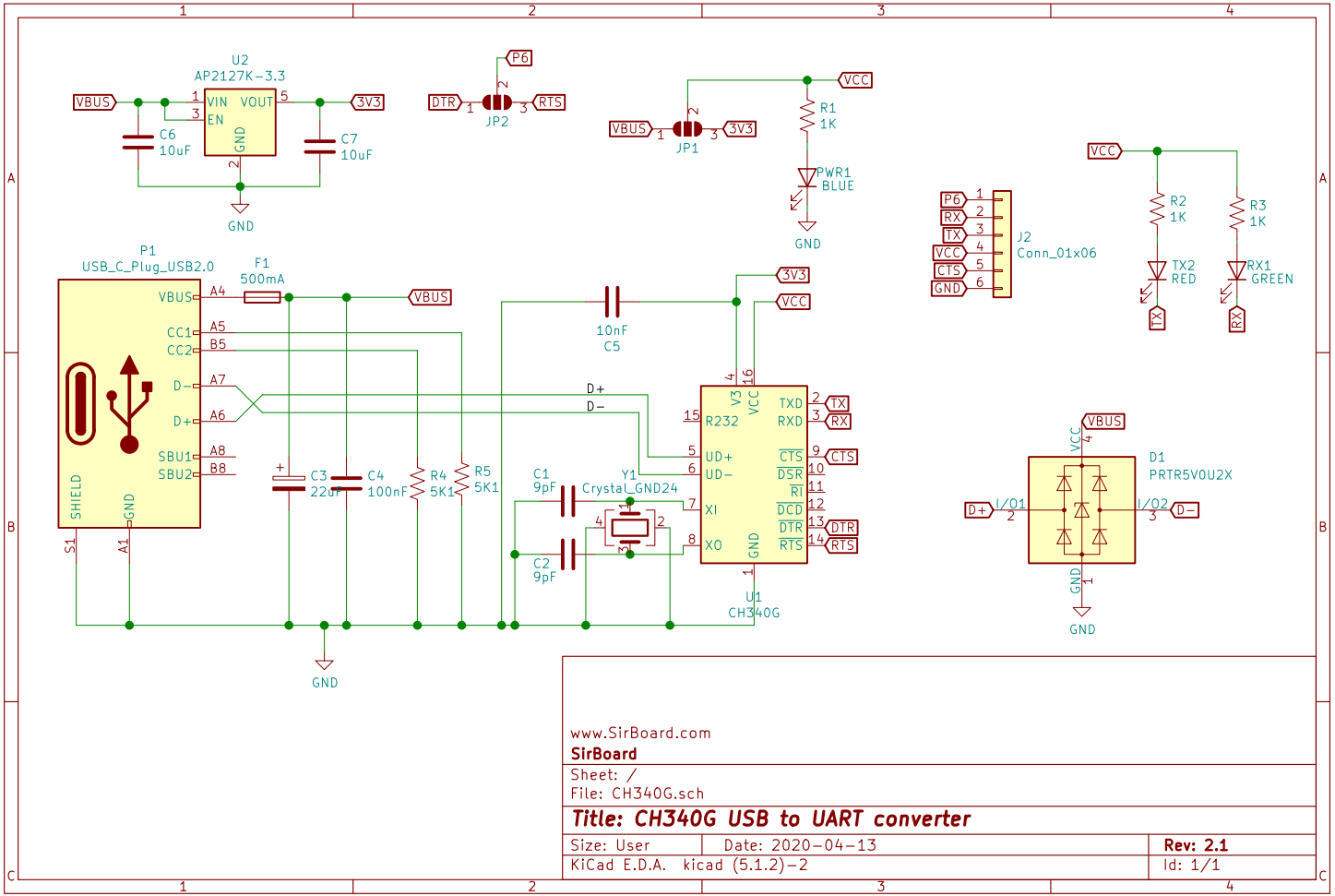

www.SirBoard.com

SirBoard

Sheet: /

File: CH340G.sch

Title: CH340G USB to UART converter

Size: User	Date: 2020-04-13	**Rev: 2.1**
KiCad E.D.A. kicad (5.1.2)-2		Id: 1/1