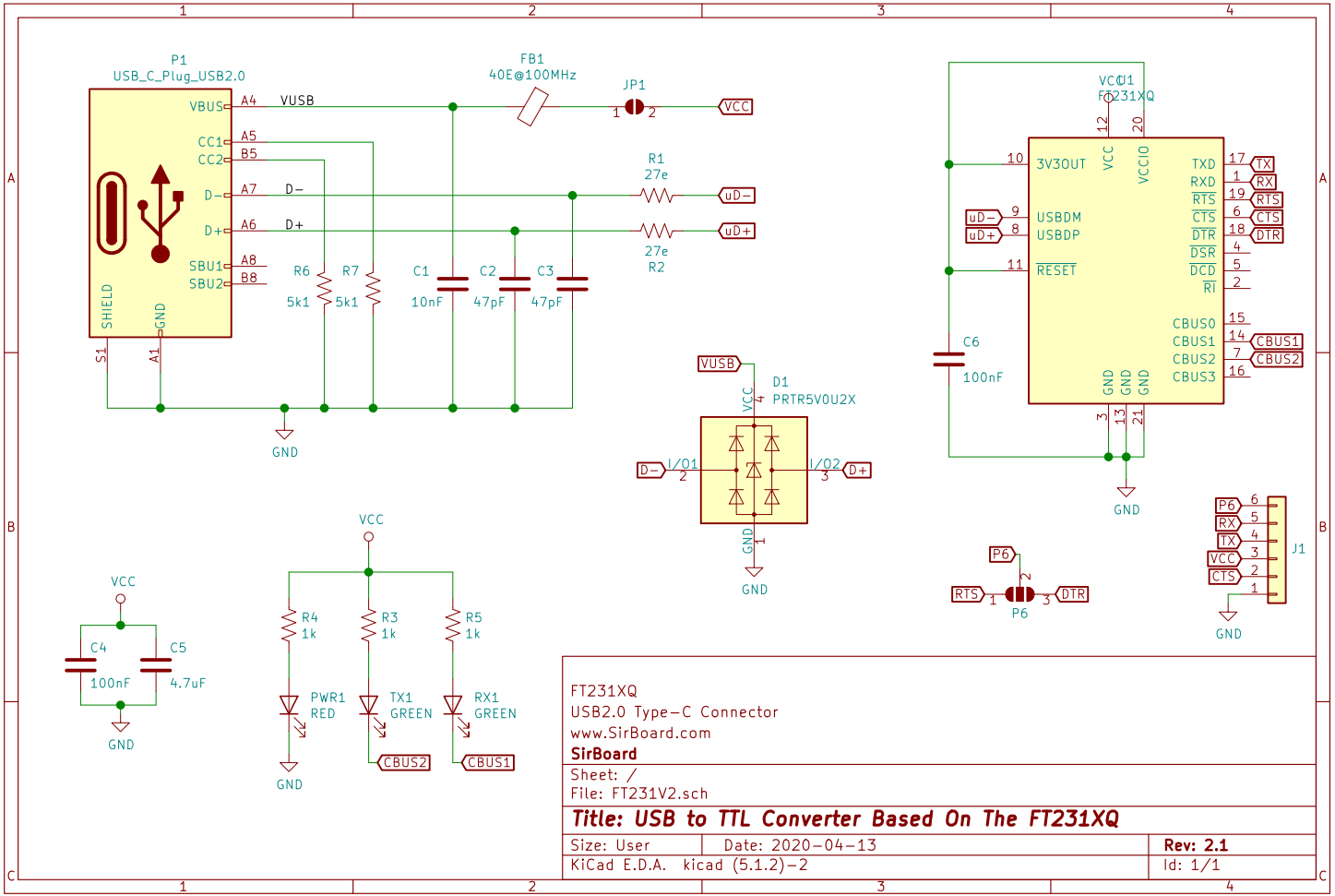

FT231XQ
USB2.0 Type-C Connector
www.SirBoard.com
SirBoard

Sheet: /
File: FT231V2.sch

Title: USB to TTL Converter Based On The FT231XQ

Size: User	Date: 2020-04-13	**Rev: 2.1**
KiCad E.D.A. kicad (5.1.2)-2		Id: 1/1