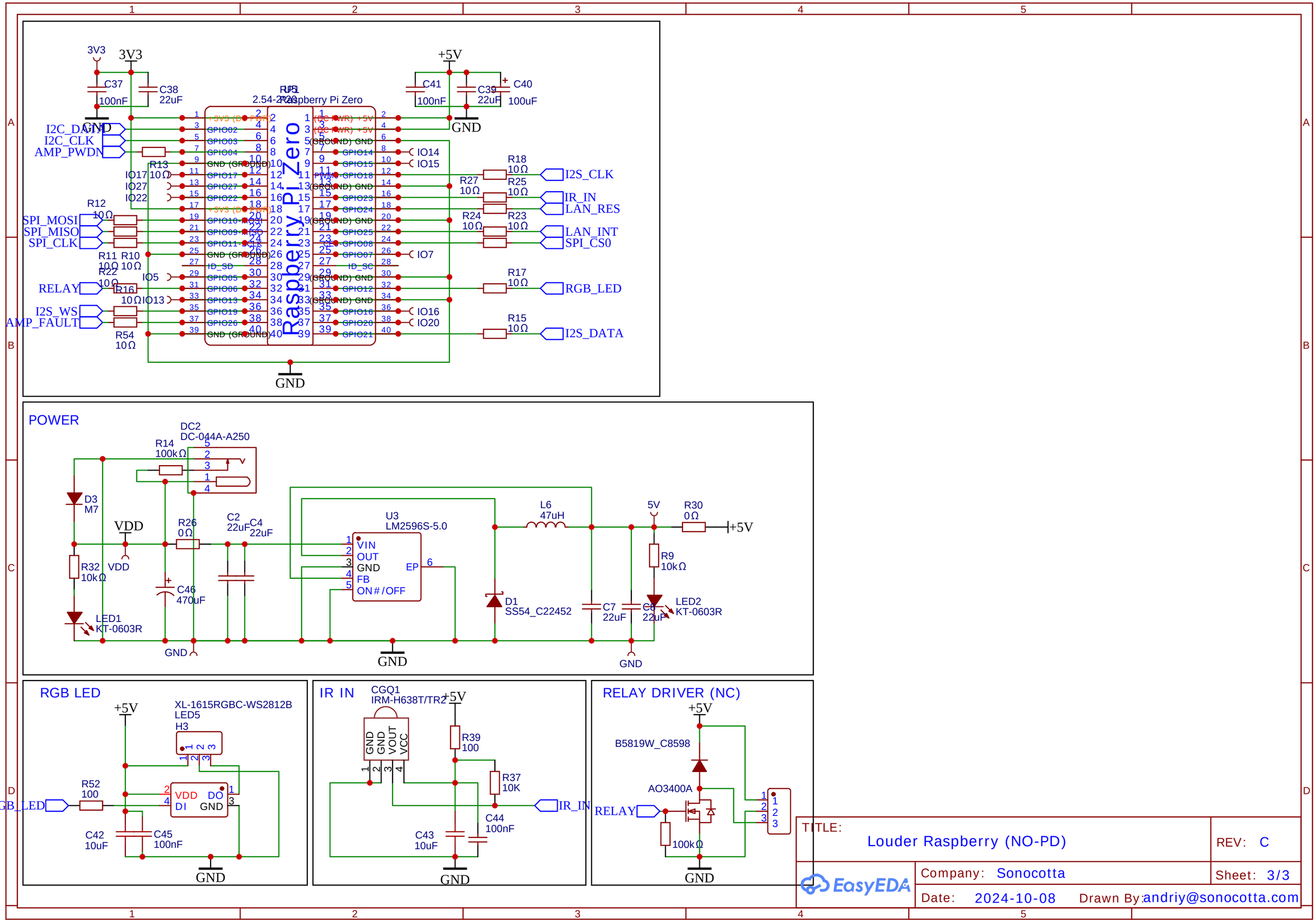

TITLE: Louder Raspberry (NO-PD)

REV: C

Company: Sonocotta

Sheet: 3/3

Date: 2024-10-08

Drawn By: andriy@sonocotta.com

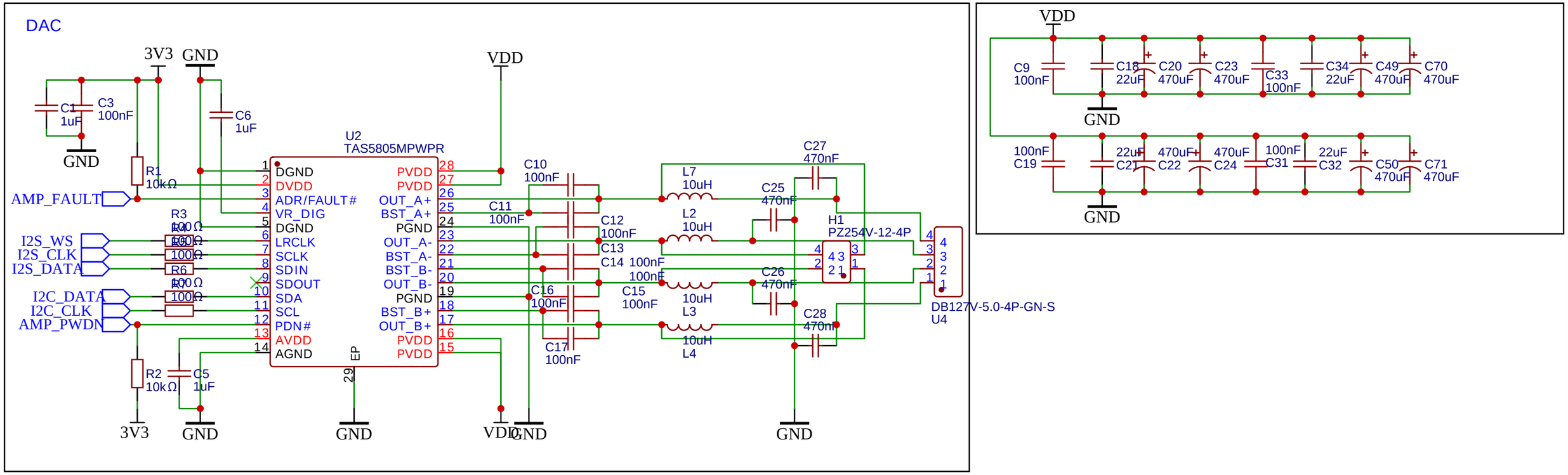

TITLE: Louder Raspberry (NO-PD)		REV: C
嘉立创EDA	Company: Sonocotta	Sheet: 1/3
	Date: 2024-10-08	Drawn By: andriy@sonocotta.com

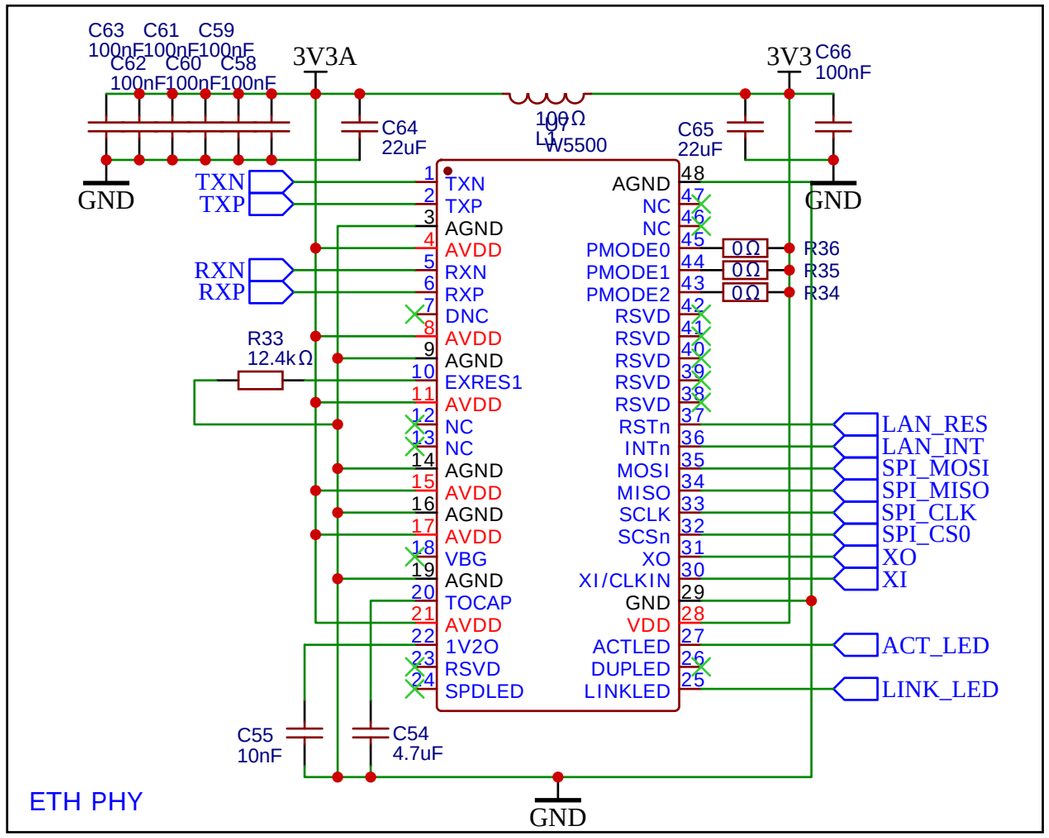

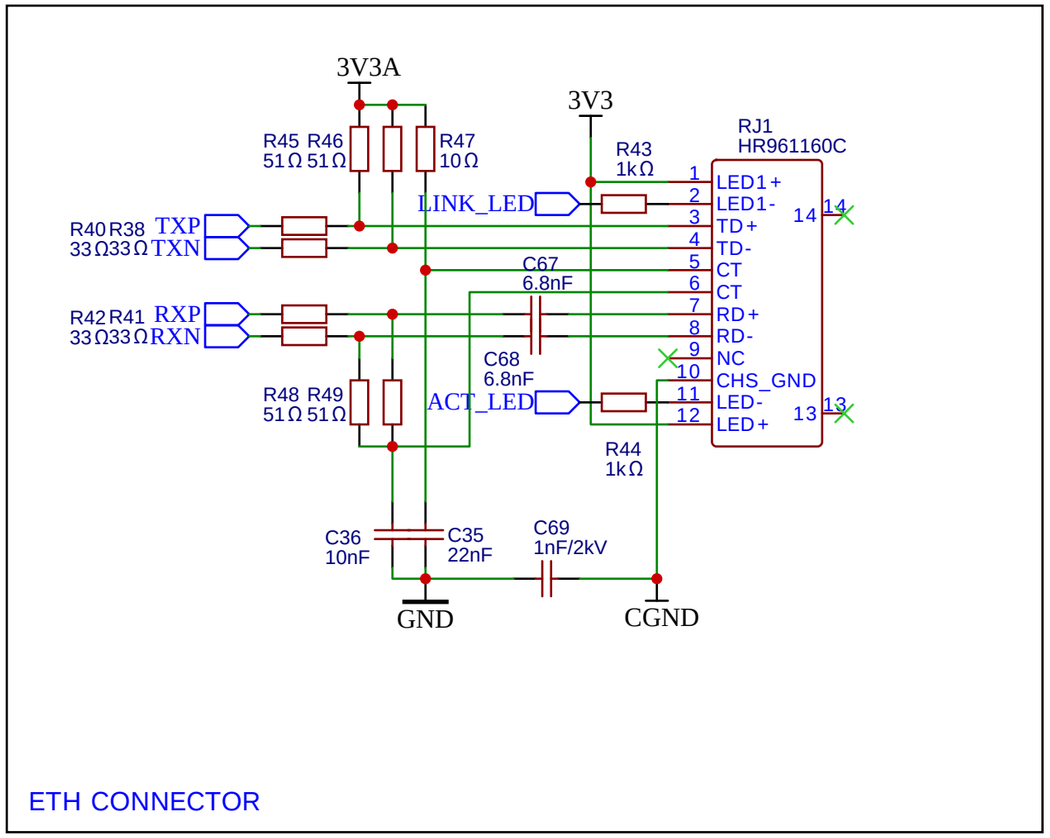

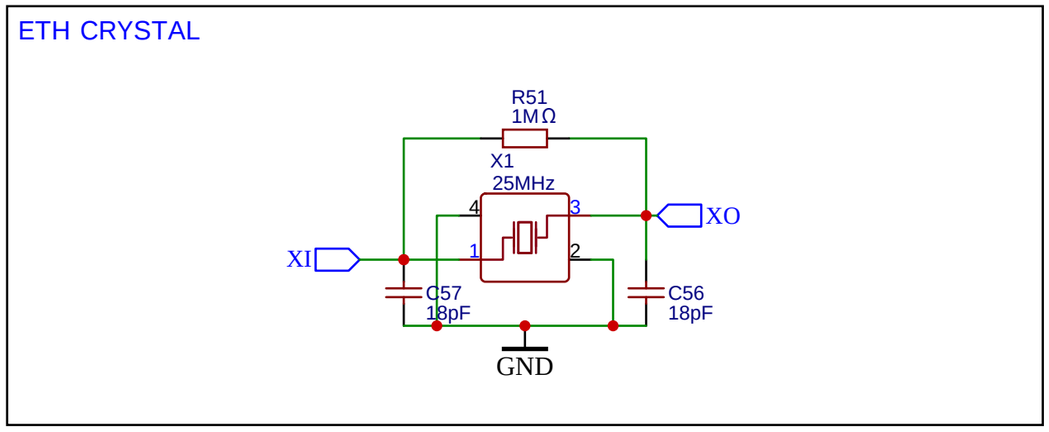

TITLE: Louder Raspberry (NO-PD)		REV: C
EasyEDA	Company: Sonocotta	Sheet: 2/3
	Date: 2024-10-08 Drawn By: andriy@sonocotta.com	