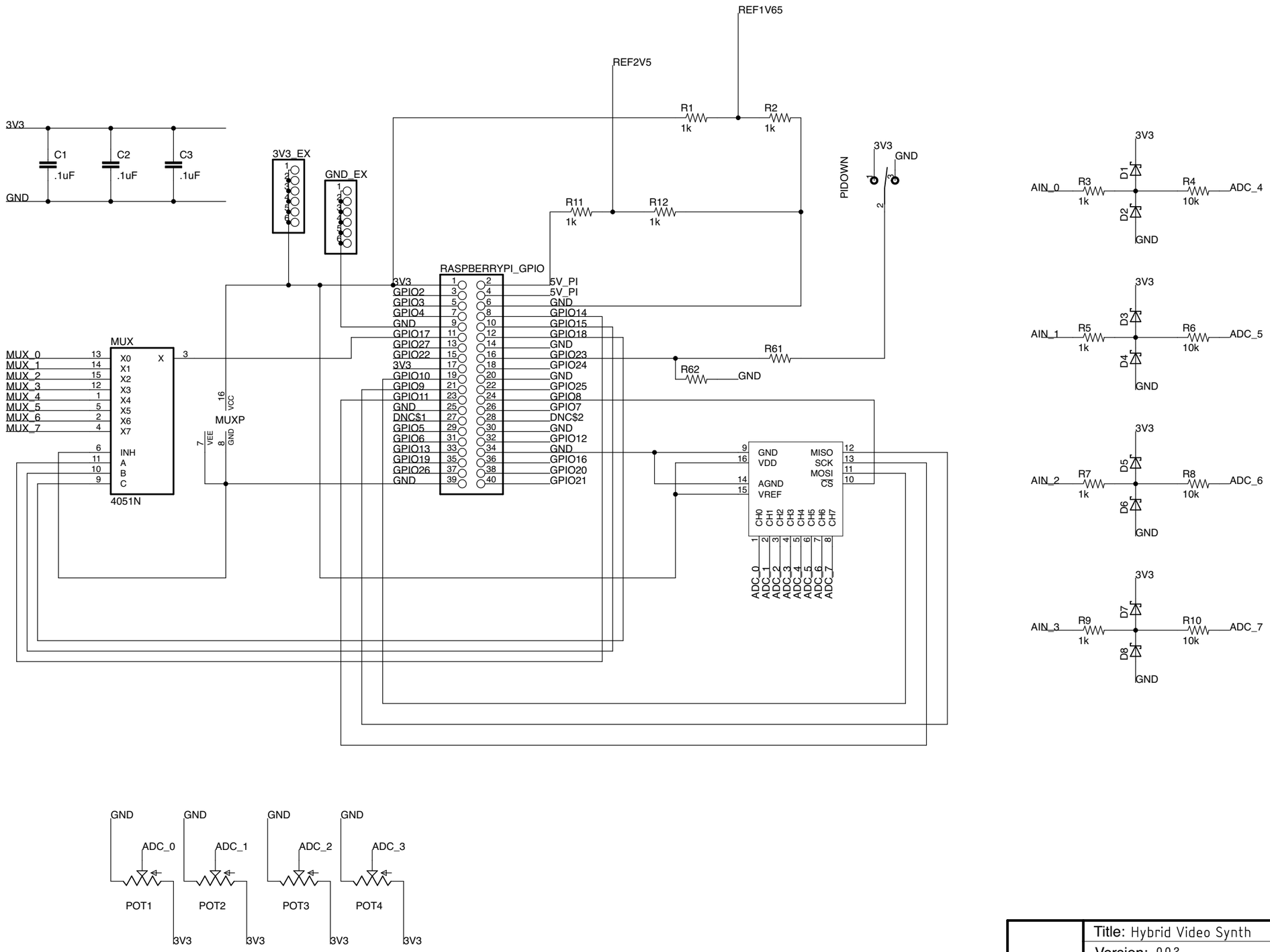

Title:	Hybrid Video Synth
Version:	0.0.2
03/02/18 1:49 AM	
Drawn By: Sourya Sen	1/4

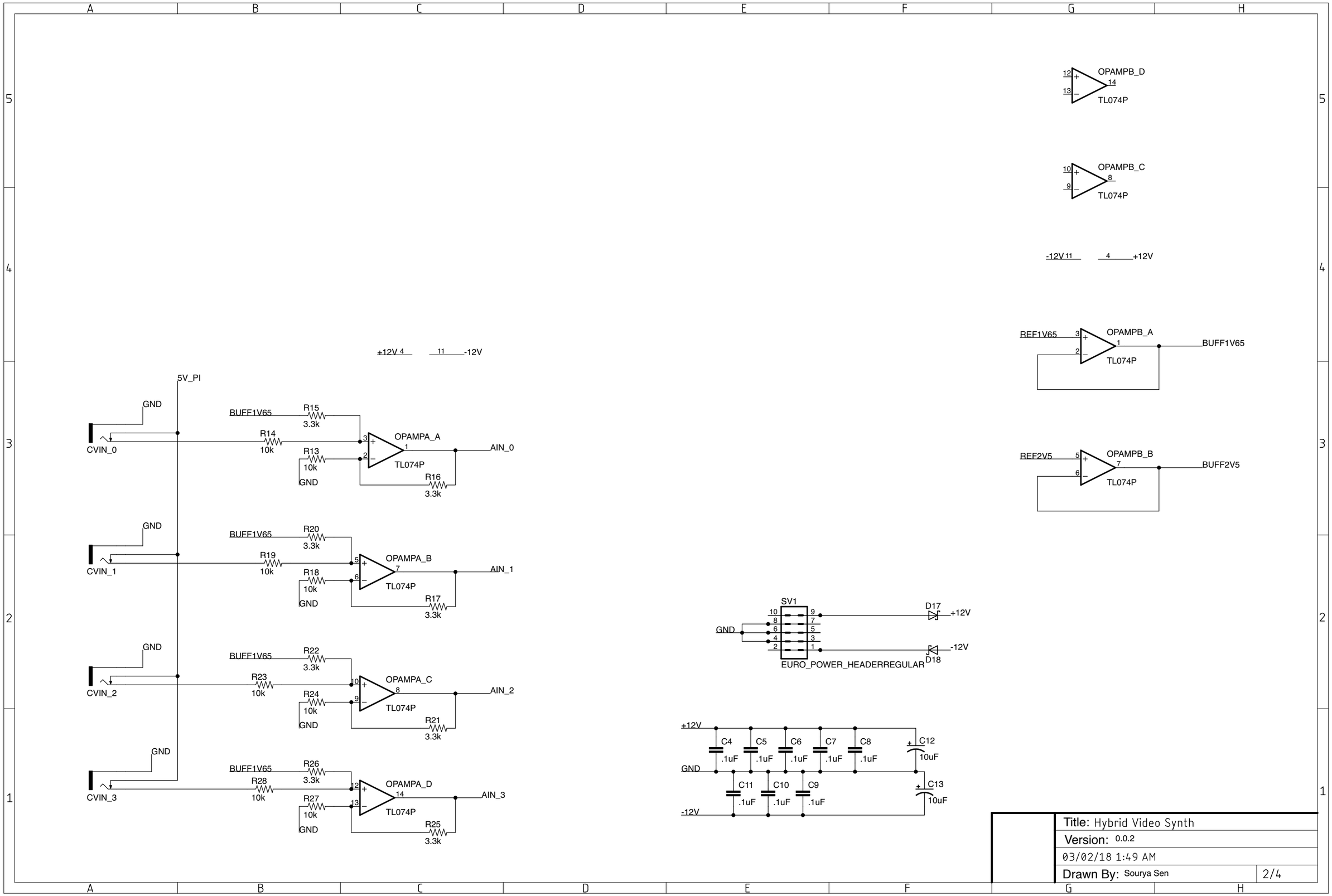
OPAMPB_D
TL074P
OPAMPB_C
TL074P
-12V
+12V
REF1V65
OPAMPB_A
TL074P
BUFF1V65
REF2V5
OPAMPB_B
TL074P
BUFF2V5
+12V
-12V
5V_PI
GND
CVIN_0
CVIN_1
CVIN_2
CVIN_3
BUFF1V65
R15
3.3k
R14
10k
R13
10k
OPAMPA_A
TL074P
AIN_0
R16
3.3k
R20
R19
R18
OPAMPA_B
AIN_1
R17
R22
R23
R24
OPAMPA_C
AIN_2
R21
R26
R28
R27
OPAMPA_D
AIN_3
R25
SV1
EURO_POWER_HEADERREGULAR
D17
D18
C4
C5
C6
C7
C8
C12
C11
C10
C9
C13
.1uF
10uF
Title: Hybrid Video Synth
Version: 0.0.2
03/02/18 1:49 AM
Drawn By: Sourya Sen
2/4

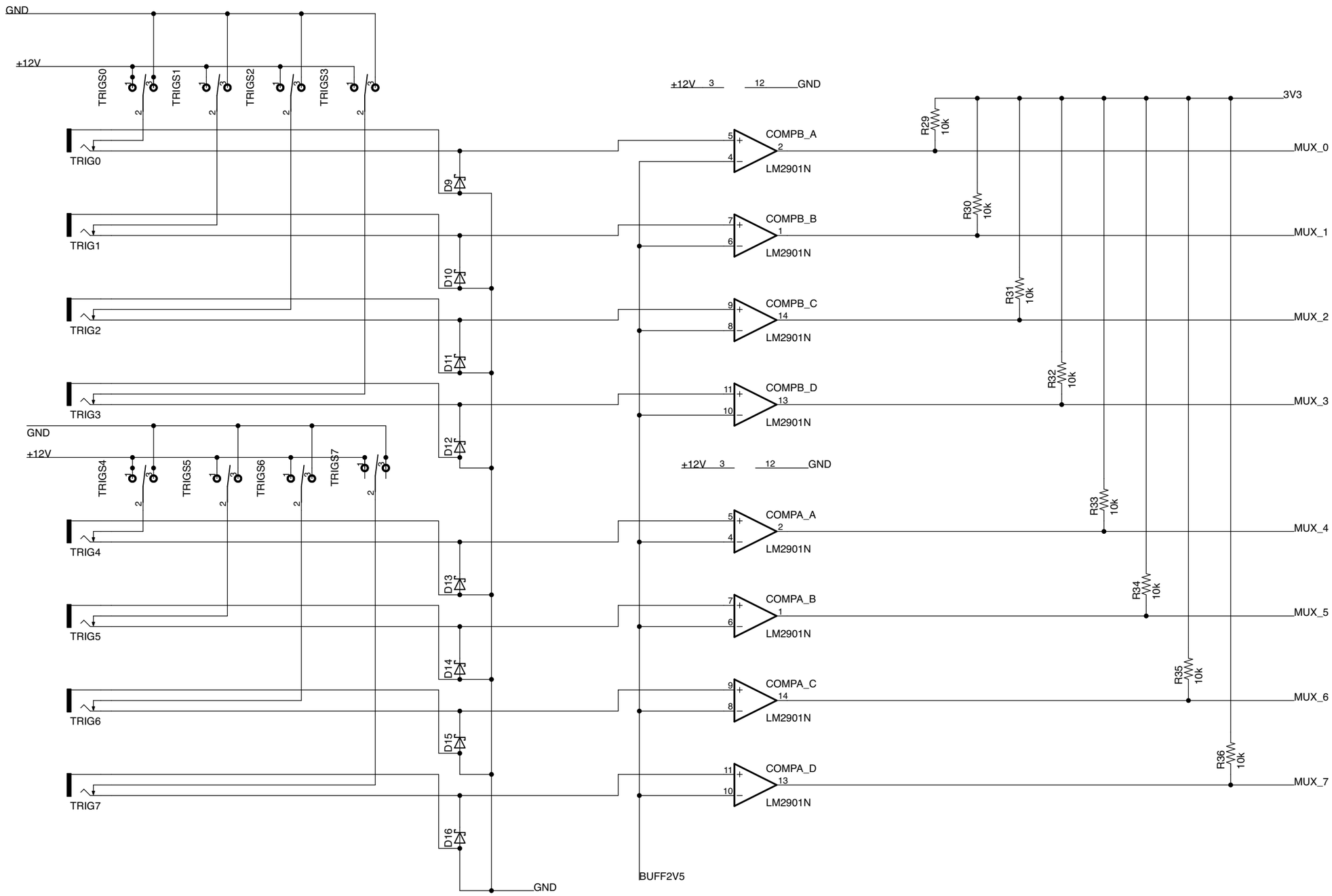

Title:	Hybrid Video Synth
Version:	0.0.2
03/02/18 1:49 AM	
Drawn By: Sourya Sen	3/4

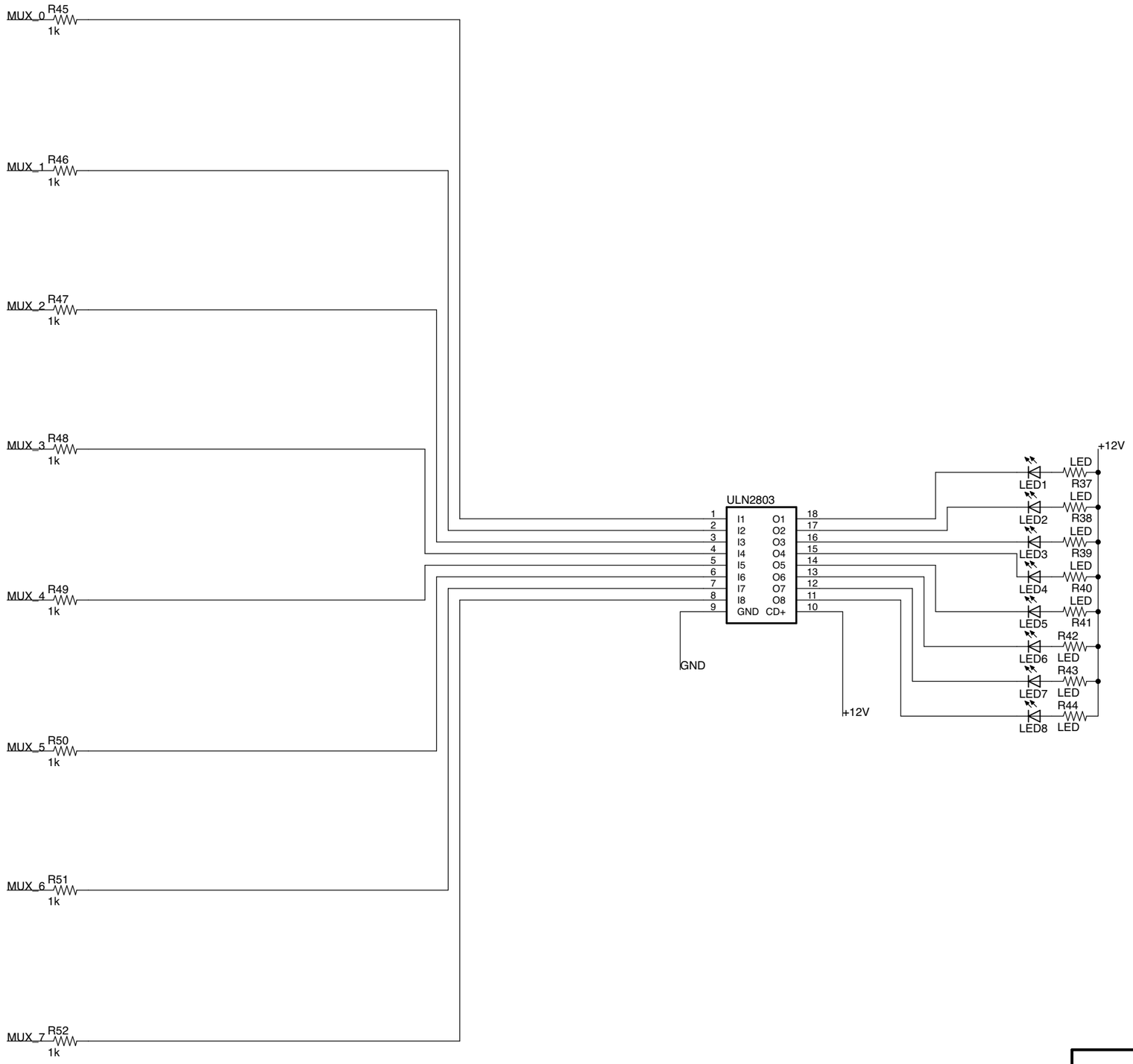

Title:	Hybrid Video Synth
Version:	0.0.2
	03/02/18 1:49 AM
Drawn By:	Sourya Sen

4/4