Rev	Description	Date	Author
1.0	Initial Release.		Yan C. de Azeredo

Revision History

PCB

Fidutials

Mechanical Holes

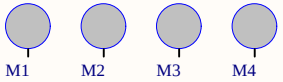

PCB Elements

Semi USB Insterstage Interface Panels of FloripaSat-2 2U CubeSat

Copyright © 2020
by Universidade Federal de Santa Catarina.

This work is licensed under the Creative Commons Attribution-ShareAlike 4.0 International License. To view a copy of this license, visit http://creativecommons.org/licenses/by-sa/4.0/.

- Drawn by: Yan Castro de Azeredo
- Reviewers: Gabriel M. Marcelino
- Support: Gabriel M. Marcelino and André M. P. Mattos

Project Information

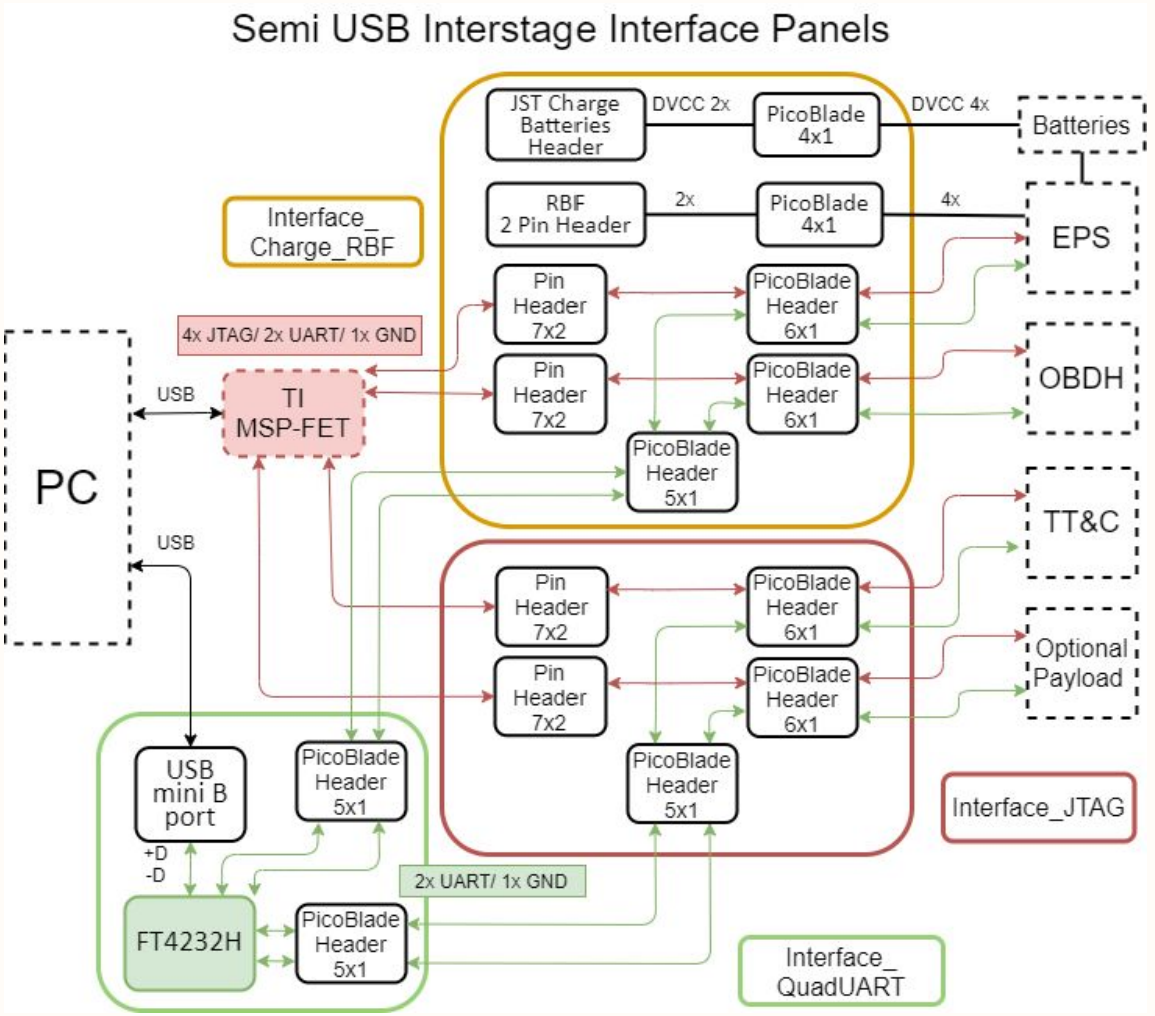

Full System Block Diagram

Title: 0_Architecture.SchDoc			
Size: A4	Project: 1_Interface_Charge_RBF.PrjPCB		Revision:
Date: 28/05/2020	Time: 22:53:37	Sheet 1 of 2	
Drawn By: Yan Castro de Azeredo		Model: Engineering	

UFSC - SpaceLab
University Campus - Trindade
Dep. of Electrical Engineering - CTC
Florianópolis, Santa Catarina, Brazil
CEP: 88040 - 900

Remove Before Flight (RBF)

External pin header

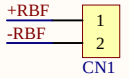

Internal PicoBlade to EPS

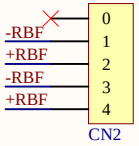

Battery charging headers

External JST XH header

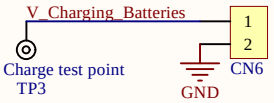

Internal PicoBlade to EPS

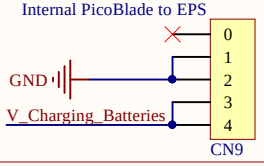

FT4232H UART signals

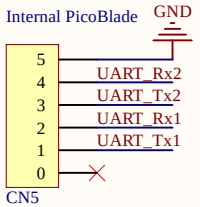

JTAG and reduntant UART headers

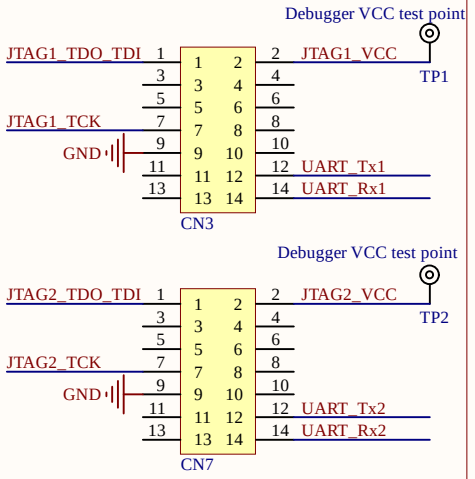

Debug and programming interfaces

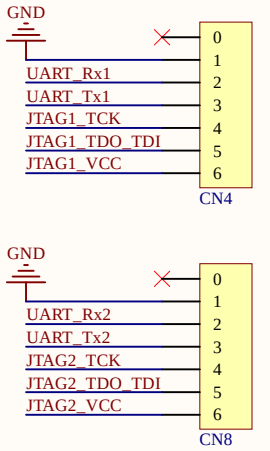

Title: 1_Interface_Charge_RBF.SchDoc			
Size: A4	Project: 1_Interface_Charge_RBF.PrjPCB		Revision: 1.0
Date: 28/05/2020	Time: 22:53:37	Sheet 2 of 2	
Drawn By: Yan Castro de Azeredo		Model: Engineering	

UFSC - SpaceLab
University Campus - Trindade
Dep. of Electrical Engineering - CTC
Florianópolis, Santa Catarina, Brazil
CEP: 88040 - 900

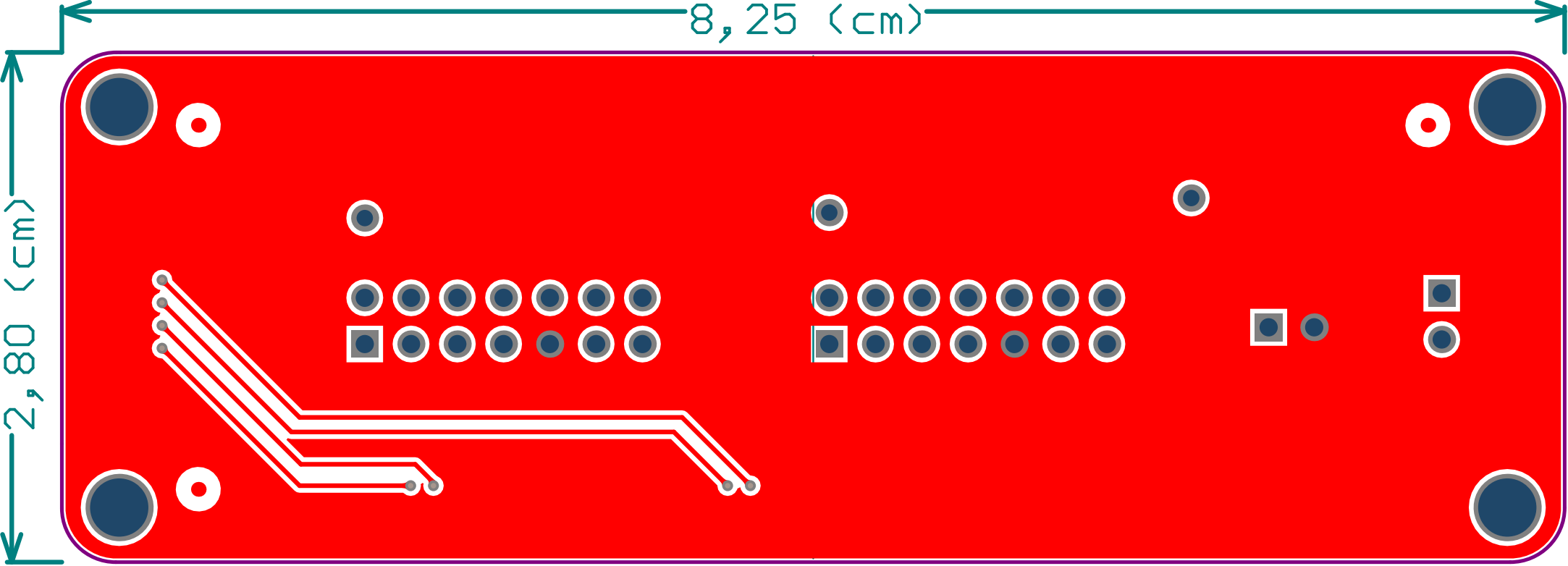
8,25 (cm)
2,80 (cm)

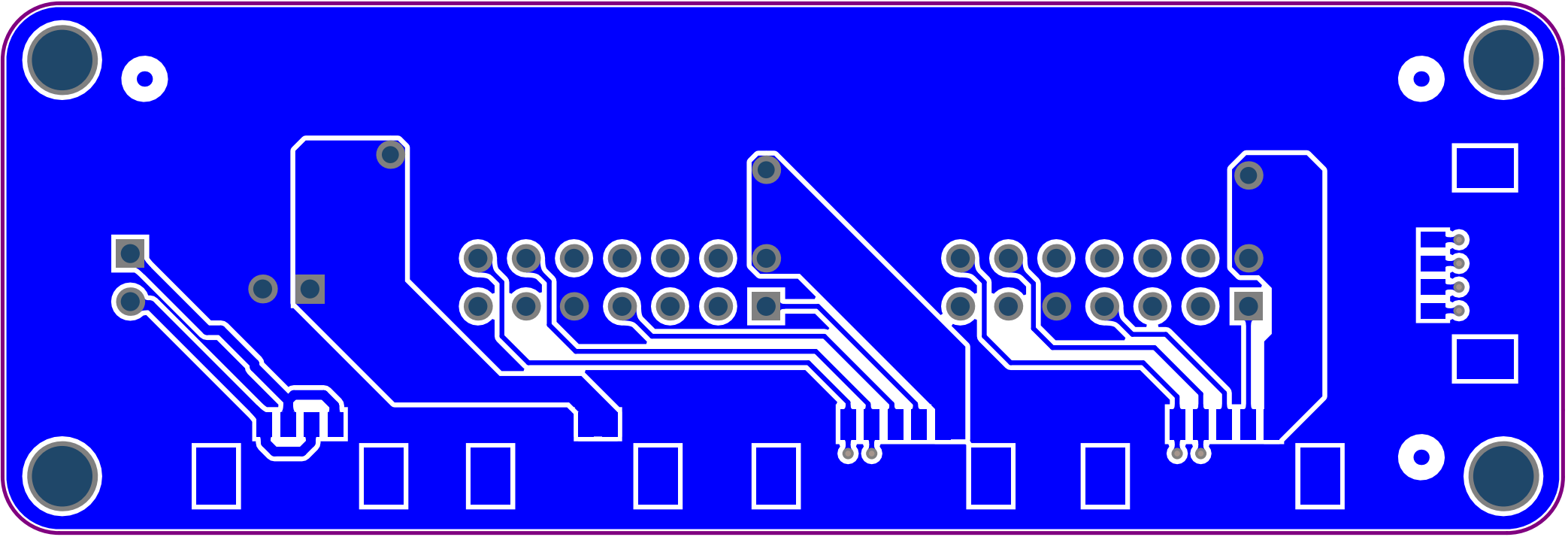

CN3
CN7
CN6
CN1

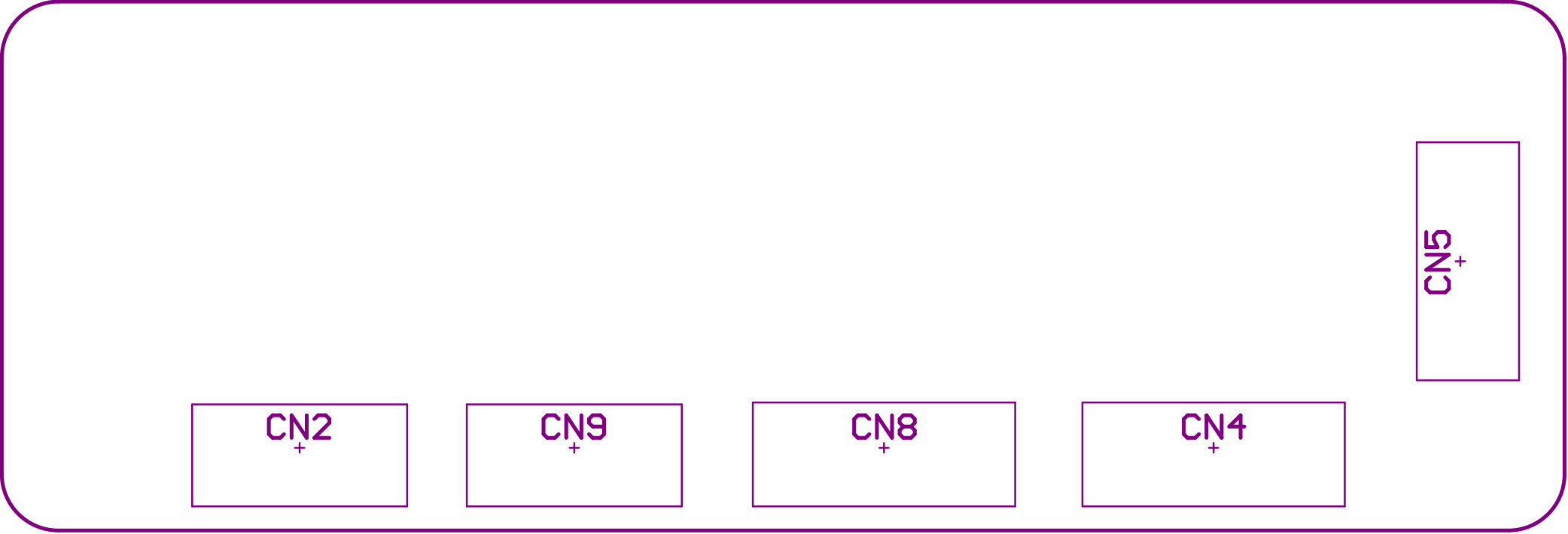
CN5
CN2
CN9
CN8
CN4

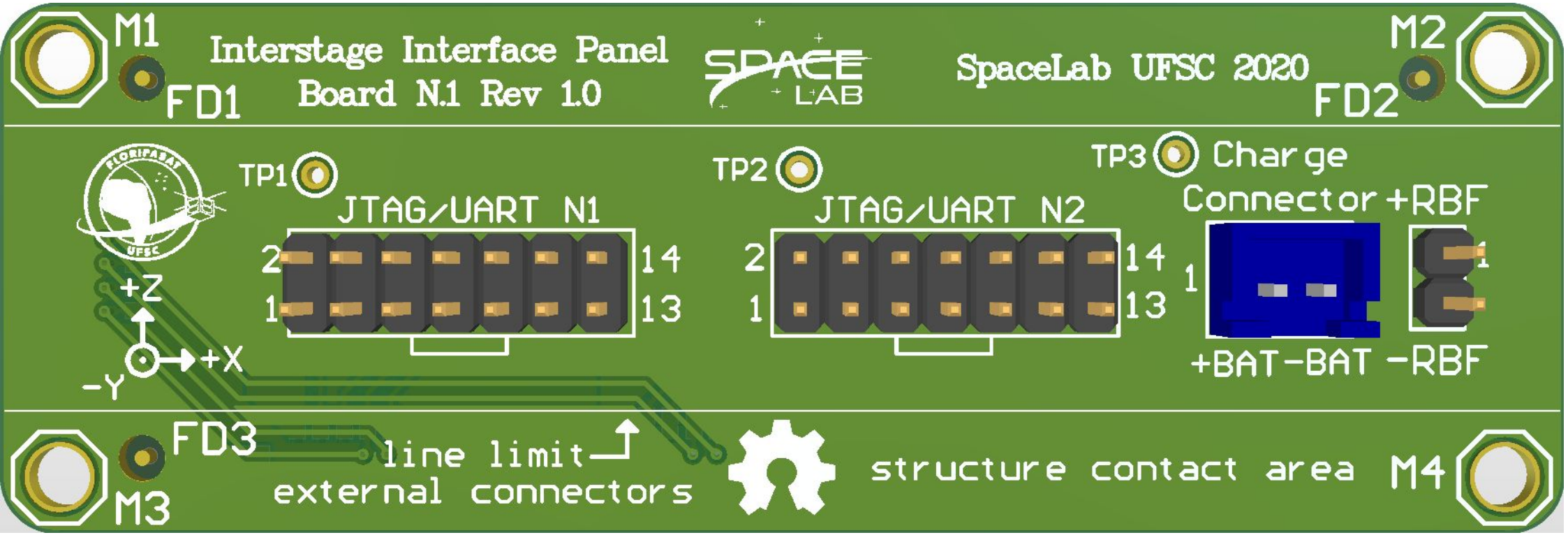
M1
FD1
Interstage Interface Panel
Board N.1 Rev 1.0
SPACE LAB
SpaceLab UFSC 2020
M2
FD2
TP1
JTAG/UART N1
2
1
14
13
TP2
JTAG/UART N2
2
1
14
13
TP3
Charge
Connector
+RBF
1
1
+BAT
-BAT
-RBF
+Z
+X
-Y
FD3
M3
line limit
external connectors
structure contact area
M4

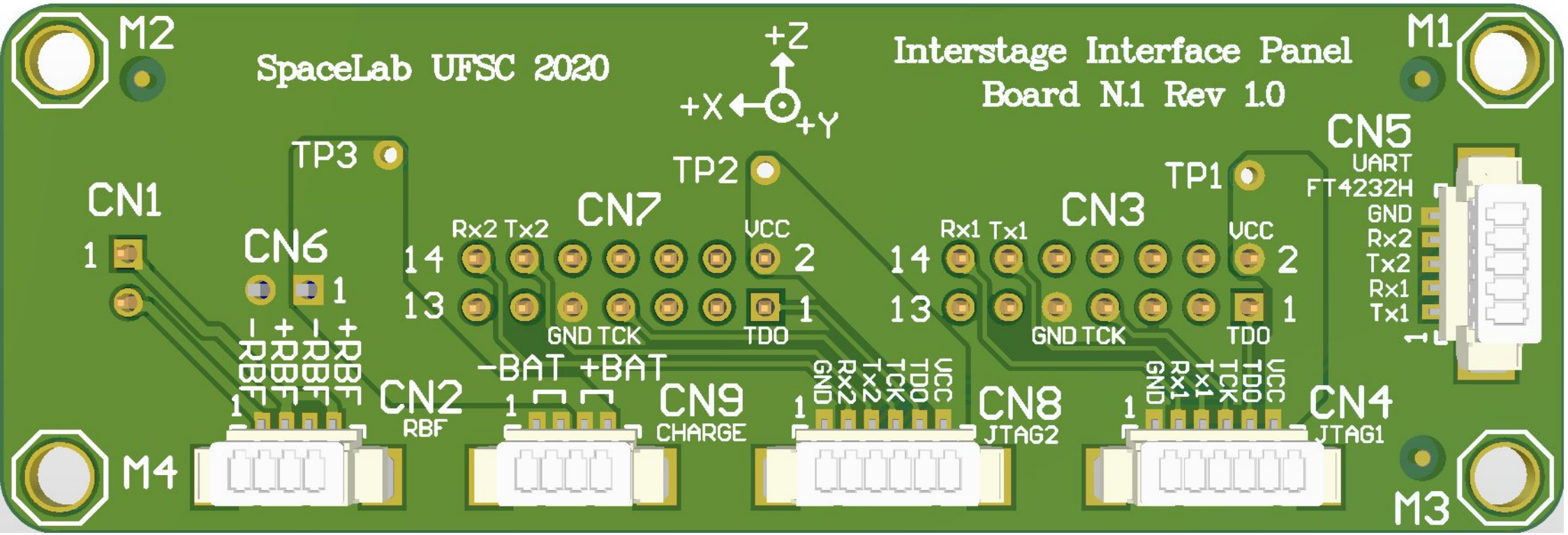

SpaceLab UFSC 2020
Interstage Interface Panel
Board N.1 Rev 1.0
+Z
+X
+Y
M1
M2
M3
M4
CN1
CN2
RBF
CN3
CN4
JTAG1
CN5
UART
FT4232H
GND
Rx2
Tx2
Rx1
Tx1
CN6
CN7
CN8
JTAG2
CN9
CHARGE
TP1
TP2
TP3
VCC
TDO
TCK
GND
-BAT
+BAT
-RBF
+RBF