CIS 6930 Topics in Computing for Data Science
Week 9: Pre-trained Language Models (1)

10/26/2021

Yoshihiko (Yoshi) Suhara

2pm-3:20pm

Week 9: Pre-trained Language Models

- ~~**Week 8: Transformers**~~
- **Week 9: Pre-trained Language Models**
- Week 10: More Machine Learning Techniques
- Week 11: More Deep Learning Techniques for NLP (Text generation, Text summarization, Information Extraction etc.)
- Week 12: Advanced Techniques and Challenges
- Week 13: Final project presentations

Today's Goal

- Pre-trained Language Models
- BERT
  - Basic Architecture
  - Pre-training
  - Fine-tuning
- Hands-on session: Fine-tuning BERT for text classification

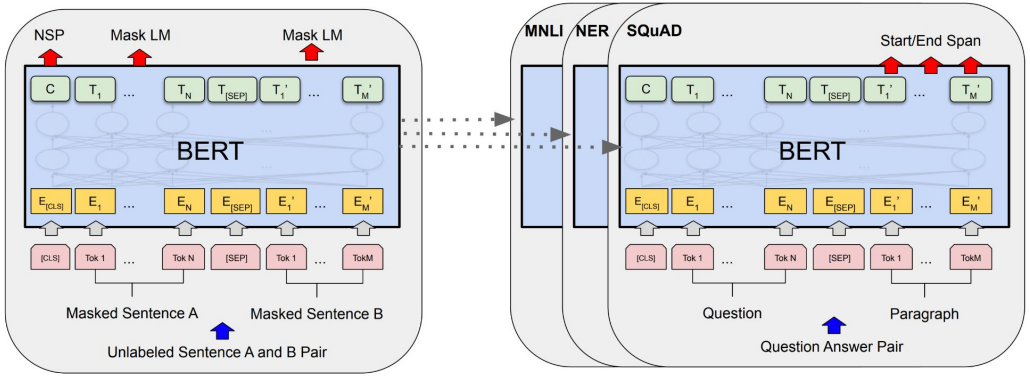

Recap: the Transformer

Recap: The Transformer 👍

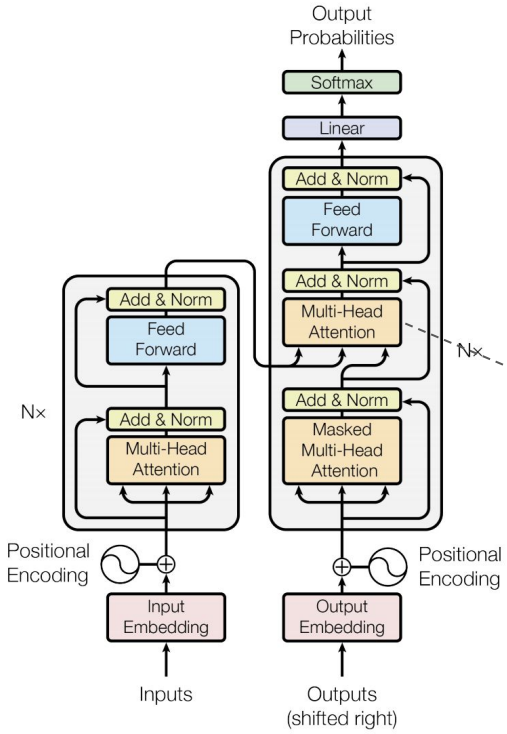

Model Architecture

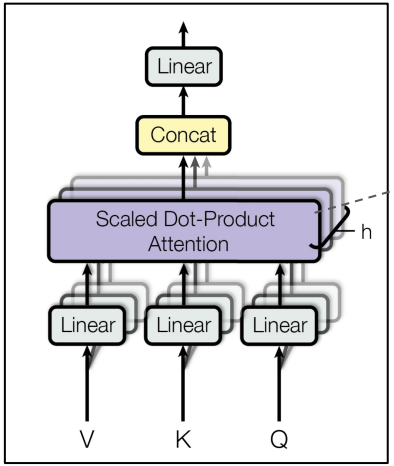

Multi-Head Attention

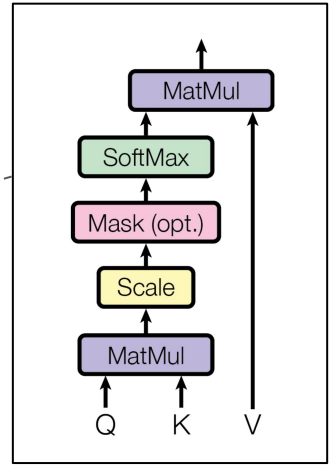

Scaled Dot-Product Attention

Model Descriptions in the Original Paper

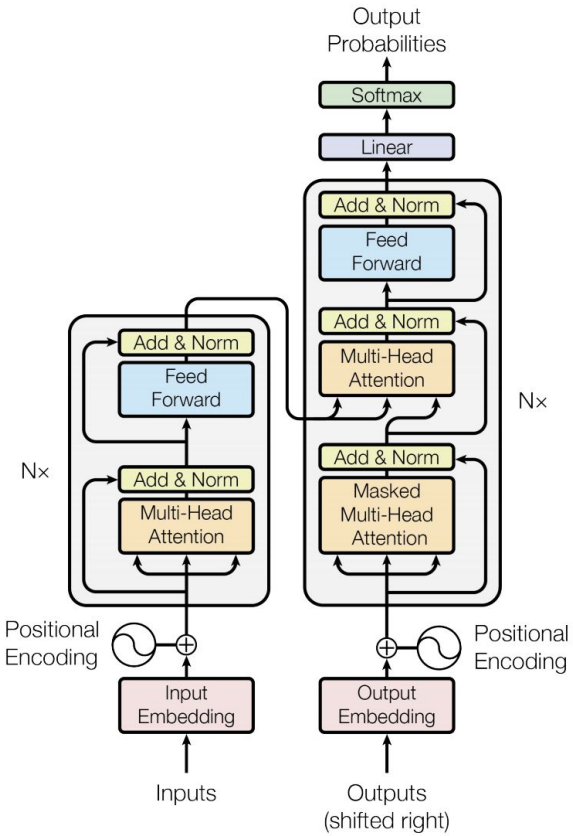

3.1 Encoder and Decoder Stacks

Encoder: The encoder is composed of a stack of $N = 6$ identical layers. Each layer has two sub-layers. The first is a multi-head self-attention mechanism, and the second is a simple, position-wise fully connected feed-forward network. We employ a residual connection [11] around each of the two sub-layers, followed by layer normalization [1]. That is, the output of each sub-layer is $\mathrm{LayerNorm}(x + \mathrm{Sublayer}(x))$, where $\mathrm{Sublayer}(x)$ is the function implemented by the sub-layer itself. To facilitate these residual connections, all sub-layers in the model, as well as the embedding layers, produce outputs of dimension $d_{\text{model}} = 512$.

Decoder: The decoder is also composed of a stack of $N = 6$ identical layers. In addition to the two sub-layers in each encoder layer, the decoder inserts a third sub-layer, which performs multi-head attention over the output of the encoder stack. Similar to the encoder, we employ residual connections around each of the sub-layers, followed by layer normalization. We also modify the self-attention sub-layer in the decoder stack to prevent positions from attending to subsequent positions. This masking, combined with fact that the output embeddings are offset by one position, ensures that the predictions for position i can depend only on the known outputs at positions less than i.

Model Descriptions in the Original Paper

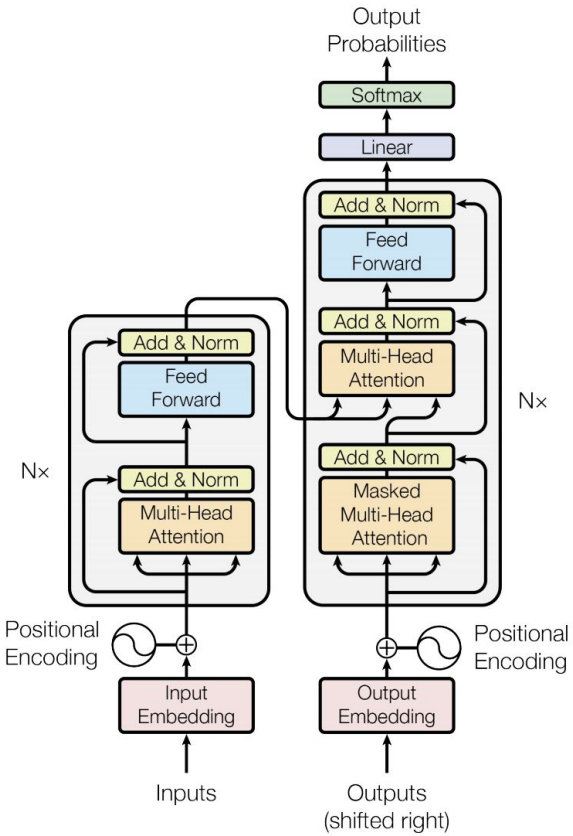

3.1 Encoder and Decoder Stacks

Encoder: The encoder is composed of a stack of $N = 6$ identical layers. Each layer has two sub-layers. The first is a multi-head self-attention mechanism, and the second is a simple, position-wise fully connected feed-forward network. We employ a residual connection [11] around each of the two sub-layers, followed by layer normalization [1]. That is, the output of each sub-layer is $\mathrm{LayerNorm}(x + \mathrm{Sublayer}(x))$, where $\mathrm{Sublayer}(x)$ is the function implemented by the sub-layer itself. To facilitate these residual connections, all sub-layers in the model, as well as the embedding layers, produce outputs of dimension $d_{\text{model}} = 512$.

Decoder: The decoder is also composed of a stack of $N = 6$ identical layers. In addition to the two sub-layers in each encoder layer, the decoder inserts a third sub-layer, which performs multi-head attention over the output of the encoder stack. Similar to the encoder, we employ residual connections around each of the sub-layers, followed by layer normalization. We also modify the self-attention sub-layer in the decoder stack to prevent positions from attending to subsequent positions. This masking, combined with fact that the output embeddings are offset by one position, ensures that the predictions for position i can depend only on the known outputs at positions less than i.

Model Descriptions in the Original Paper

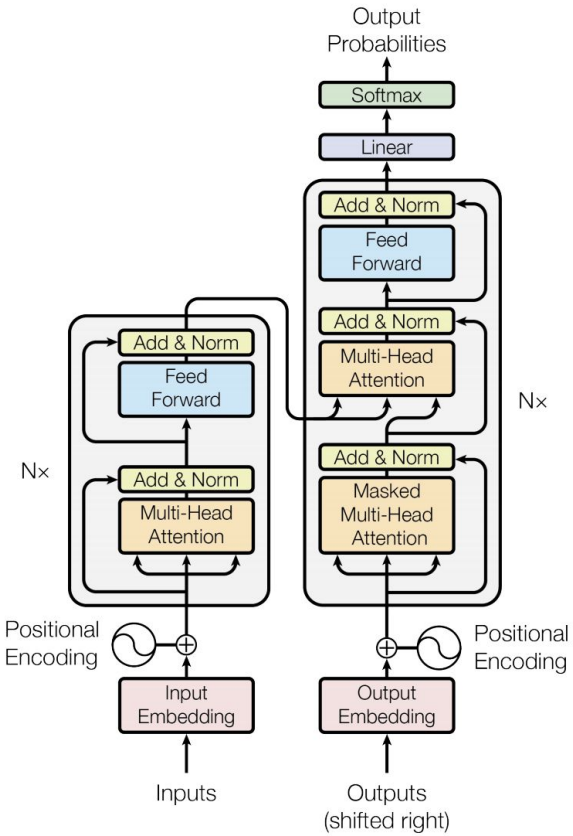

3.1 Encoder and Decoder Stacks

Encoder: The encoder is composed of a stack of $N = 6$ identical layers. Each layer has two sub-layers. The first is a multi-head self-attention mechanism, and the second is a simple, position-wise fully connected feed-forward network. We employ a residual connection [11] around each of the two sub-layers, followed by layer normalization [1]. That is, the output of each sub-layer is $\mathrm{LayerNorm}(x + \mathrm{Sublayer}(x))$, where $\mathrm{Sublayer}(x)$ is the function implemented by the sub-layer itself. To facilitate these residual connections, all sub-layers in the model, as well as the embedding layers, produce outputs of dimension $d_{\text{model}} = 512$.

Decoder: The decoder is also composed of a stack of $N = 6$ identical layers. In addition to the two sub-layers in each encoder layer, the decoder inserts a third sub-layer, which performs multi-head attention over the output of the encoder stack. Similar to the encoder, we employ residual connections around each of the sub-layers, followed by layer normalization. We also modify the self-attention sub-layer in the decoder stack to prevent positions from attending to subsequent positions. This masking, combined with fact that the output embeddings are offset by one position, ensures that the predictions for position i can depend only on the known outputs at positions less than i.

Model Descriptions in the Original Paper

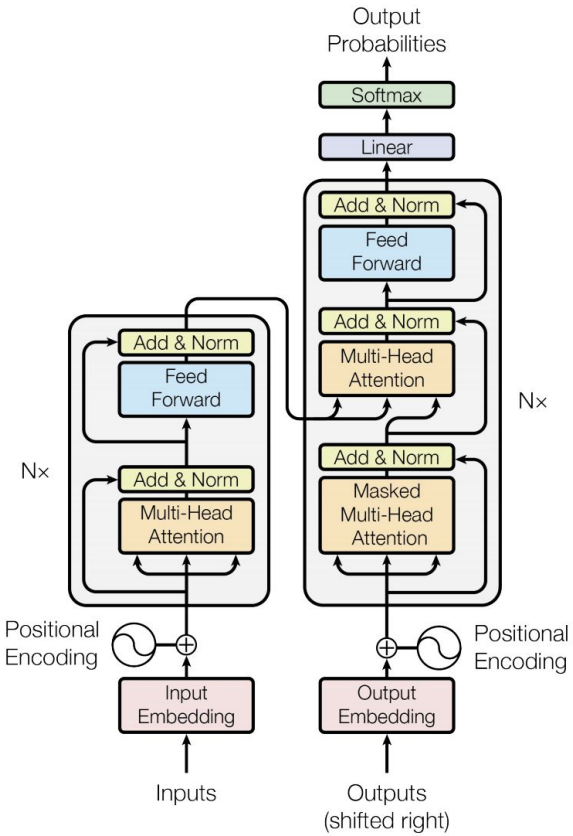

3.1 Encoder and Decoder Stacks

Encoder: The encoder is composed of a stack of $N = 6$ identical layers. Each layer has two sub-layers. The first is a multi-head self-attention mechanism, and the second is a simple, position-wise fully connected feed-forward network. We employ a residual connection [11] around each of the two sub-layers, followed by layer normalization [1]. That is, the output of each sub-layer is $\mathrm{LayerNorm}(x + \mathrm{Sublayer}(x))$, where $\mathrm{Sublayer}(x)$ is the function implemented by the sub-layer itself. To facilitate these residual connections, all sub-layers in the model, as well as the embedding layers, produce outputs of dimension $d_{\text{model}} = 512$.

Decoder: The decoder is also composed of a stack of $N = 6$ identical layers. In addition to the two sub-layers in each encoder layer, the decoder inserts a third sub-layer, which performs multi-head attention over the output of the encoder stack. Similar to the encoder, we employ residual connections around each of the sub-layers, followed by layer normalization. We also modify the self-attention sub-layer in the decoder stack to prevent positions from attending to subsequent positions. This masking, combined with fact that the output embeddings are offset by one position, ensures that the predictions for position i can depend only on the known outputs at positions less than i.

Model Descriptions in the Original Paper

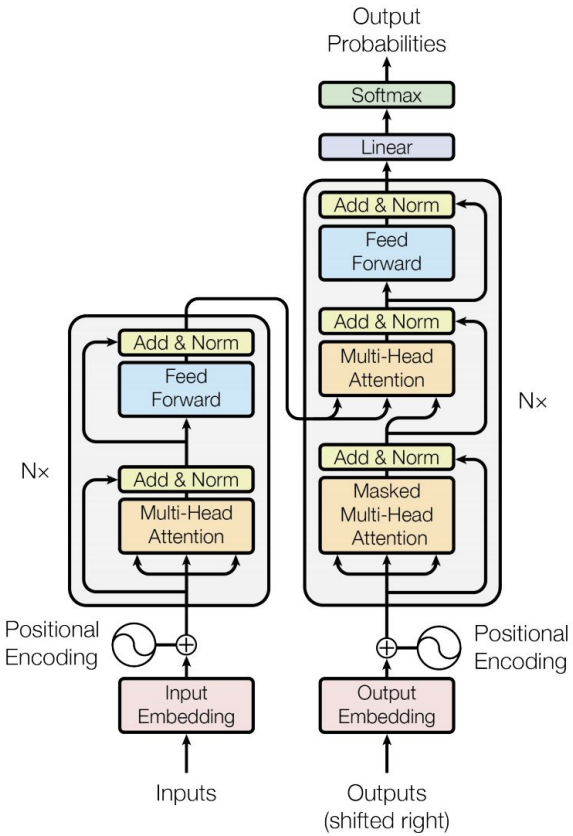

3.1 Encoder and Decoder Stacks

Encoder: The encoder is composed of a stack of $N = 6$ identical layers. Each layer has two sub-layers. The first is a multi-head self-attention mechanism, and the second is a simple, position-wise fully connected feed-forward network. We employ a residual connection [11] around each of the two sub-layers, followed by layer normalization [1]. That is, the output of each sub-layer is $\mathrm{LayerNorm}(x + \mathrm{Sublayer}(x))$, where $\mathrm{Sublayer}(x)$ is the function implemented by the sub-layer itself. To facilitate these residual connections, all sub-layers in the model, as well as the embedding layers, produce outputs of dimension $d_{\text{model}} = 512$.

Decoder: The decoder is also composed of a stack of $N = 6$ identical layers. In addition to the two sub-layers in each encoder layer, the decoder inserts a third sub-layer, which performs multi-head attention over the output of the encoder stack. Similar to the encoder, we employ residual connections around each of the sub-layers, followed by layer normalization. We also modify the self-attention sub-layer in the decoder stack to prevent positions from attending to subsequent positions. This masking, combined with fact that the output embeddings are offset by one position, ensures that the predictions for position i can depend only on the known outputs at positions less than i.

Model Descriptions in the Original Paper

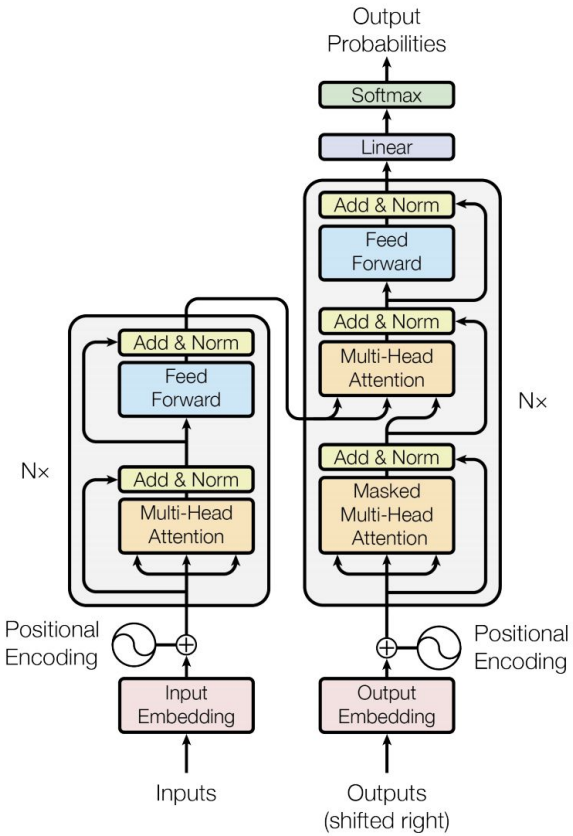

3.1 Encoder and Decoder Stacks

Encoder: The encoder is composed of a stack of $N = 6$ identical layers. Each layer has two sub-layers. The first is a multi-head self-attention mechanism, and the second is a simple, position-wise fully connected feed-forward network. We employ a residual connection [11] around each of the two sub-layers, followed by layer normalization [1]. That is, the output of each sub-layer is $\mathrm{LayerNorm}(x + \mathrm{Sublayer}(x))$, where $\mathrm{Sublayer}(x)$ is the function implemented by the sub-layer itself. To facilitate these residual connections, all sub-layers in the model, as well as the embedding layers, produce outputs of dimension $d_{\text{model}} = 512$.

Decoder: The decoder is also composed of a stack of $N = 6$ identical layers. In addition to the two sub-layers in each encoder layer, the decoder inserts a third sub-layer, which performs multi-head attention over the output of the encoder stack. Similar to the encoder, we employ residual connections around each of the sub-layers, followed by layer normalization. We also modify the self-attention sub-layer in the decoder stack to prevent positions from attending to subsequent positions. This masking, combined with fact that the output embeddings are offset by one position, ensures that the predictions for position i can depend only on the known outputs at positions less than i.

Model Descriptions in the Original Paper

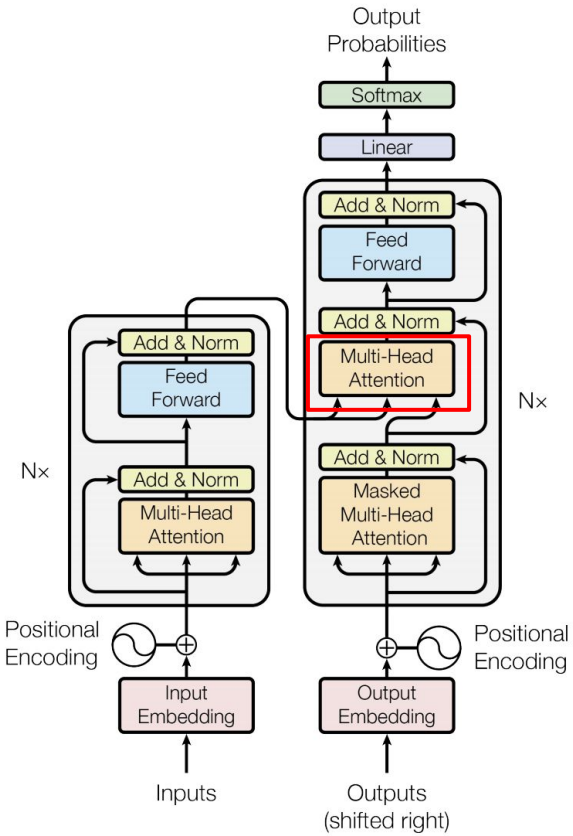

3.1 Encoder and Decoder Stacks

Encoder: The encoder is composed of a stack of $N = 6$ identical layers. Each layer has two sub-layers. The first is a multi-head self-attention mechanism, and the second is a simple, position-wise fully connected feed-forward network. We employ a residual connection [11] around each of the two sub-layers, followed by layer normalization [1]. That is, the output of each sub-layer is $\mathrm{LayerNorm}(x + \mathrm{Sublayer}(x))$, where $\mathrm{Sublayer}(x)$ is the function implemented by the sub-layer itself. To facilitate these residual connections, all sub-layers in the model, as well as the embedding layers, produce outputs of dimension $d_{\text{model}} = 512$.

Decoder: The decoder is also composed of a stack of $N = 6$ identical layers. In addition to the two sub-layers in each encoder layer, the decoder inserts a third sub-layer, which performs multi-head attention over the output of the encoder stack. Similar to the encoder, we employ residual connections around each of the sub-layers, followed by layer normalization. We also modify the self-attention sub-layer in the decoder stack to prevent positions from attending to subsequent positions. This masking, combined with fact that the output embeddings are offset by one position, ensures that the predictions for position i can depend only on the known outputs at positions less than i.

Model Descriptions in the Original Paper

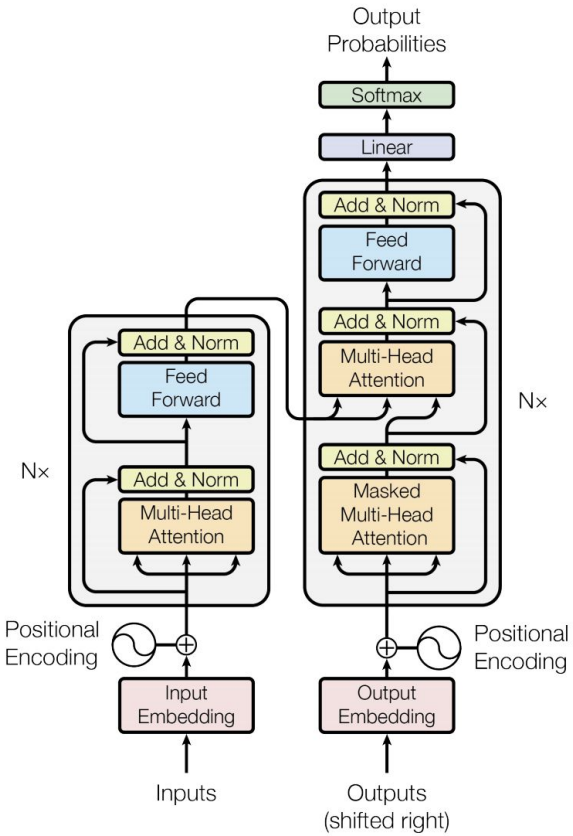

3.1 Encoder and Decoder Stacks

Encoder: The encoder is composed of a stack of $N = 6$ identical layers. Each layer has two sub-layers. The first is a multi-head self-attention mechanism, and the second is a simple, position-wise fully connected feed-forward network. We employ a residual connection [11] around each of the two sub-layers, followed by layer normalization [1]. That is, the output of each sub-layer is $\mathrm{LayerNorm}(x + \mathrm{Sublayer}(x))$, where $\mathrm{Sublayer}(x)$ is the function implemented by the sub-layer itself. To facilitate these residual connections, all sub-layers in the model, as well as the embedding layers, produce outputs of dimension $d_{\text{model}} = 512$.

Decoder: The decoder is also composed of a stack of $N = 6$ identical layers. In addition to the two sub-layers in each encoder layer, the decoder inserts a third sub-layer, which performs multi-head attention over the output of the encoder stack. Similar to the encoder, we employ residual connections around each of the sub-layers, followed by layer normalization. We also modify the self-attention sub-layer in the decoder stack to prevent positions from attending to subsequent positions. This masking, combined with fact that the output embeddings are offset by one position, ensures that the predictions for position i can depend only on the known outputs at positions less than i.

Model Descriptions in the Original Paper

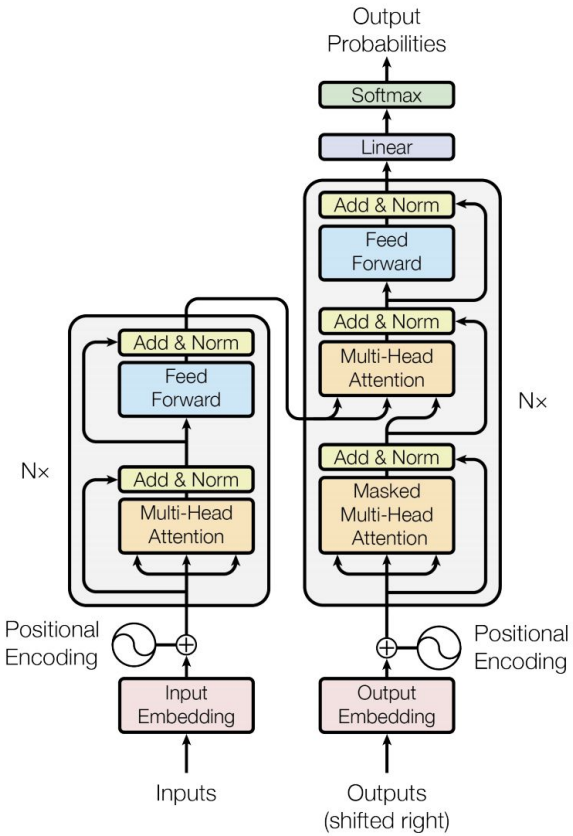

3.1 Encoder and Decoder Stacks

Encoder: The encoder is composed of a stack of $N = 6$ identical layers. Each layer has two sub-layers. The first is a multi-head self-attention mechanism, and the second is a simple, position-wise fully connected feed-forward network. We employ a residual connection [11] around each of the two sub-layers, followed by layer normalization [1]. That is, the output of each sub-layer is $\mathrm{LayerNorm}(x + \mathrm{Sublayer}(x))$, where $\mathrm{Sublayer}(x)$ is the function implemented by the sub-layer itself. To facilitate these residual connections, all sub-layers in the model, as well as the embedding layers, produce outputs of dimension $d_{\text{model}} = 512$.

Decoder: The decoder is also composed of a stack of $N = 6$ identical layers. In addition to the two sub-layers in each encoder layer, the decoder inserts a third sub-layer, which performs multi-head attention over the output of the encoder stack. Similar to the encoder, we employ residual connections around each of the sub-layers, followed by layer normalization. We also modify the self-attention sub-layer in the decoder stack to prevent positions from attending to subsequent positions. This masking, combined with fact that the output embeddings are offset by one position, ensures that the predictions for position i can depend only on the known outputs at positions less than i.

PyTorch Code Reading

- Transformer
- TransformerEncoder
- TransformerEncoderLayer
- MultiheadAttention
- TransformerDecoder
- TransformerDecoderLayer

Last Week's Goal:
Understanding the Transformer Architecture 😊

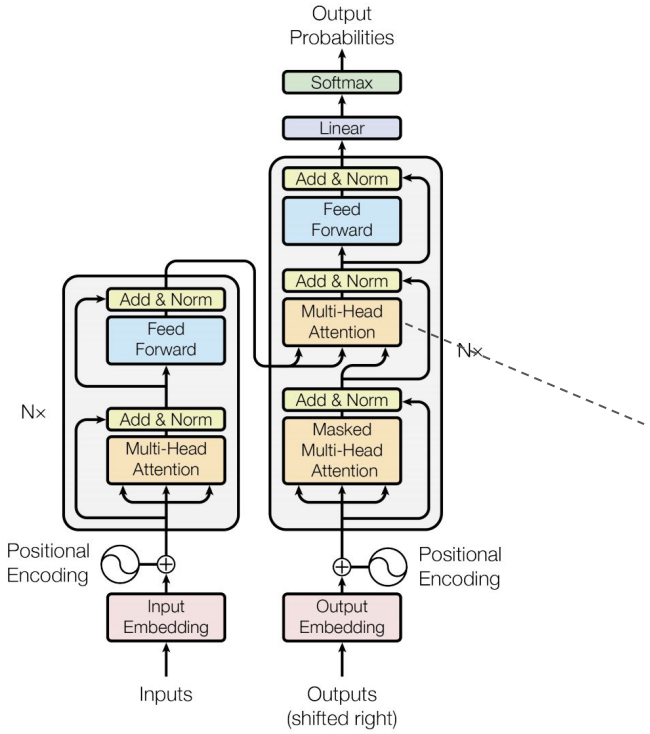

Model Architecture

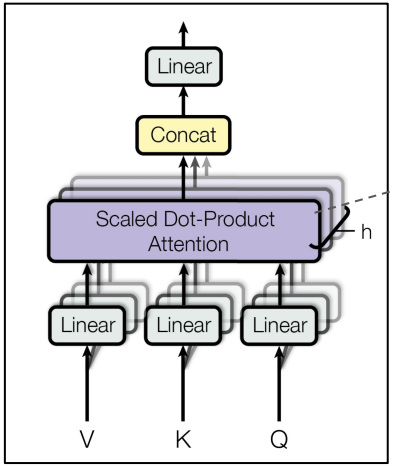

Multi-Head Attention

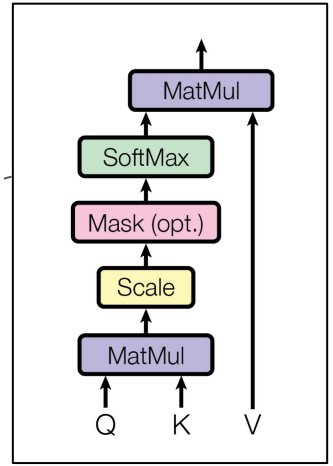

Scaled Dot-Product Attention

Pre-trained Language Models

Traditional Machine Learning Models

- Training data + Learning algorithm = Model

Traditional Machine Learning Models

- Training data + Learning algorithm = Model

Can we create machine learning models with prior knowledge?

Pre-training & Fine-tuning Framework

- **Pre-training**

Pre-training & Fine-tuning Framework

- 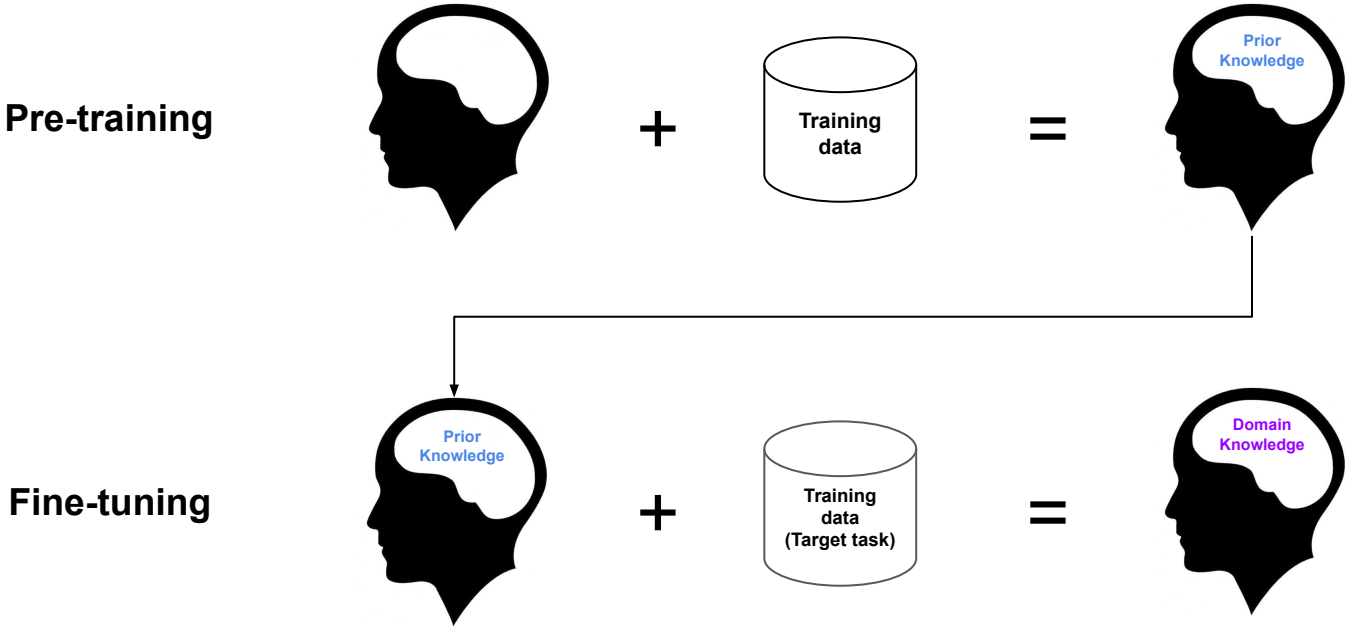

Pre-training & Fine-tuning Framework

- 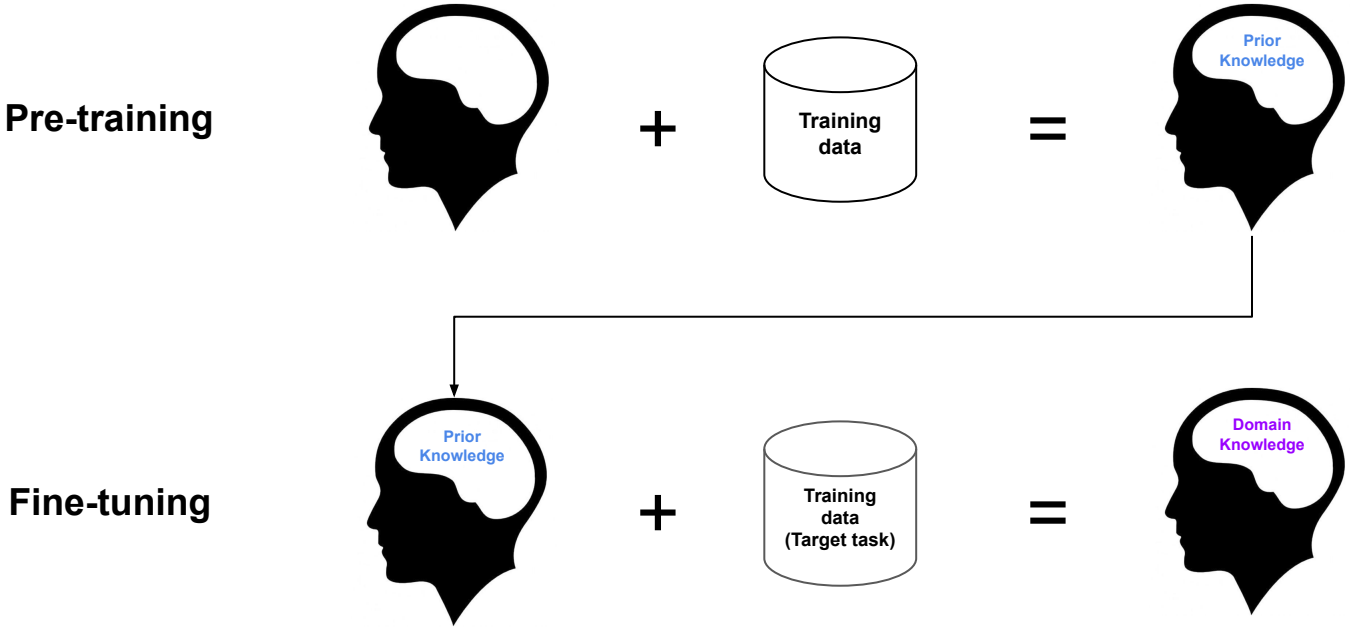

Do you have any ideas?

Pre-training & Fine-tuning for Computer Vision

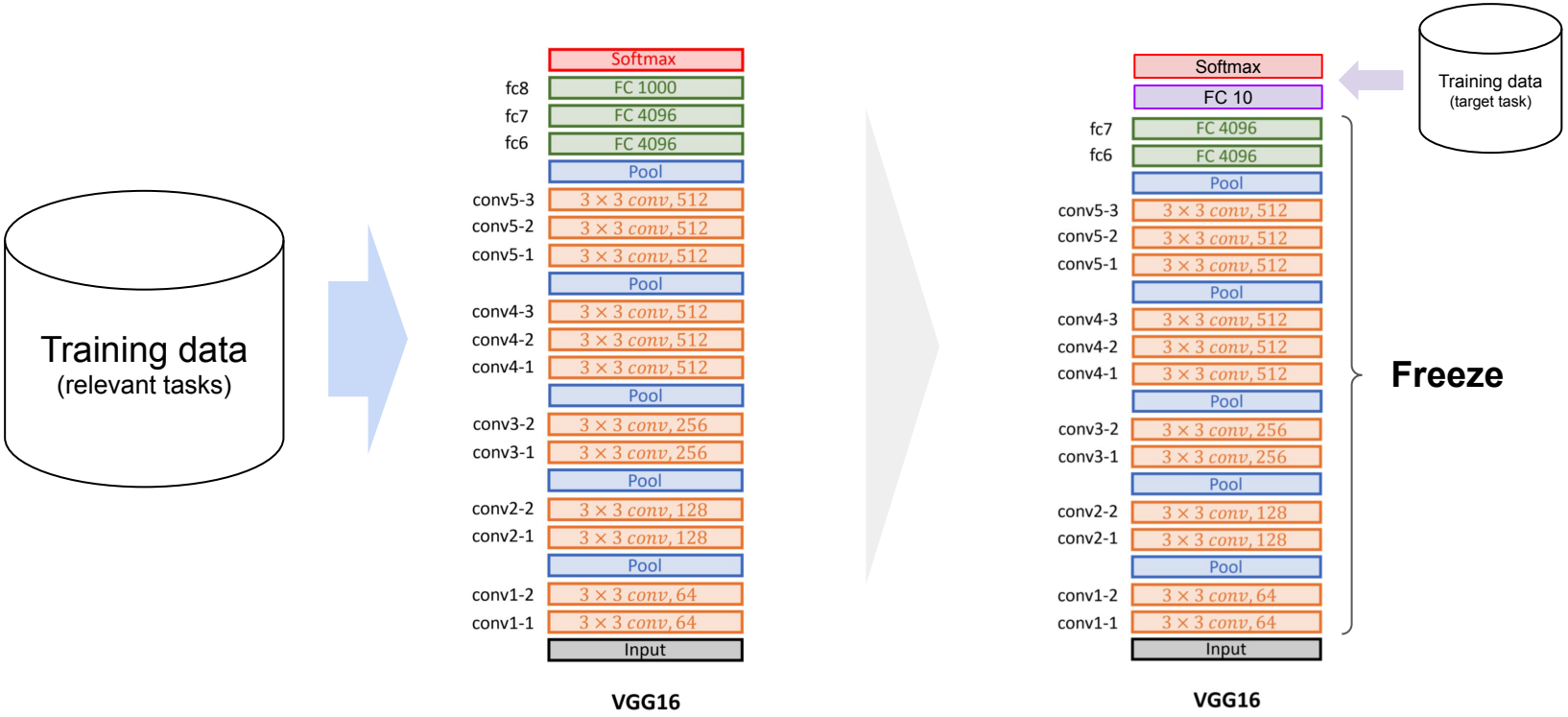

Pre-training & Fine-tuning for NLP

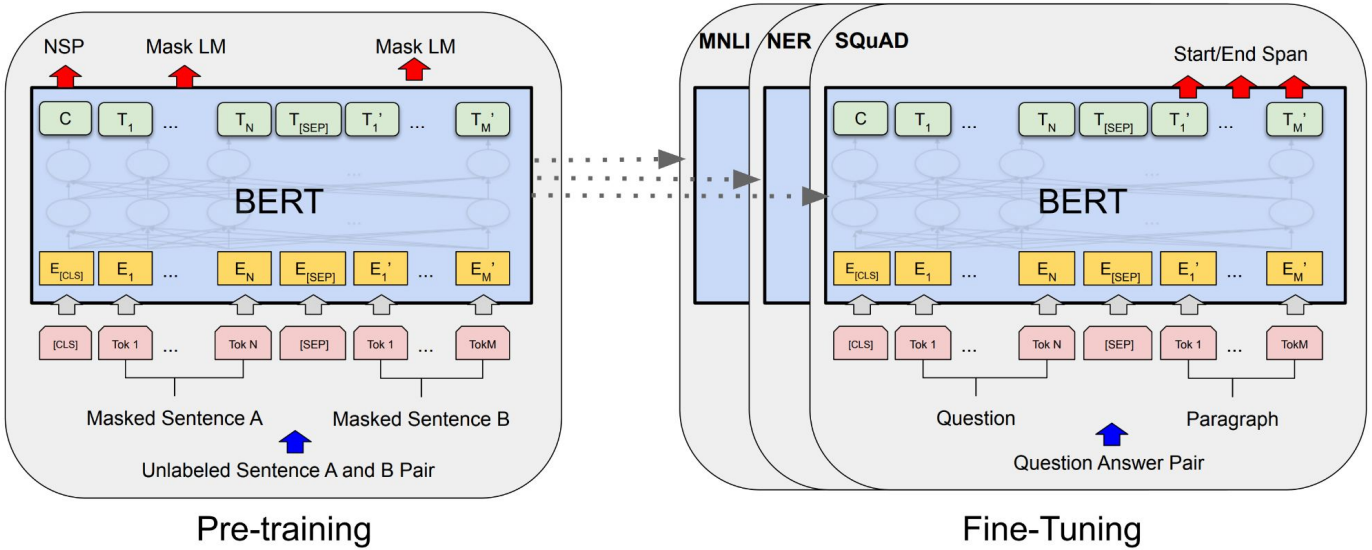

Pre-training & Fine-tuning: Intuition

Pre-training

Pre-training Task 1

Pre-training Task 2

Fine-tuning

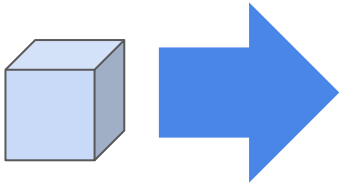

(e.g., BERT)

Downstream tasks

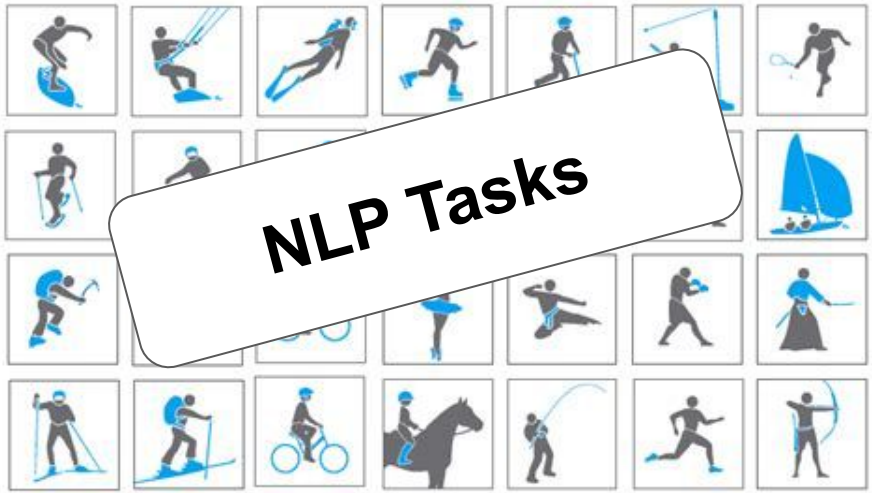

What is BERT? Why BERT?

- **BERT: <u>B</u>idirectional <u>E</u>ncoder <u>R</u>epresentations from <u>T</u>ransformers**
  - The most popular pre-trained language model in NLP

- A pre-trained **Transformer Encoder** model, which can be **fine-tuned** for a variety of NLP tasks

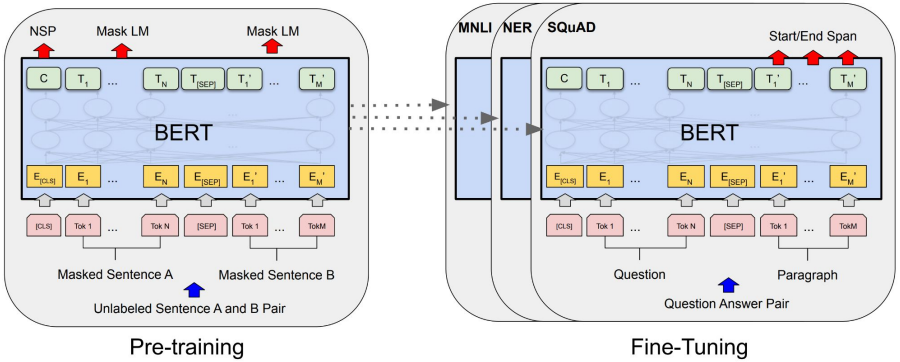

Among most cited papers in NLP: 75 citations/day

BERT: Pre-training of Deep Bidirectional Transformers for Language Understanding

Jacob Devlin **Ming-Wei Chang** **Kenton Lee** **Kristina Toutanova**
Google AI Language
{jacobdevlin,mingweichang,kentonl,kristout}@google.com

Total citations Cited by 28469

- 10/11/2018 arXiv preprint
- 6/5/2019 Conference presentation (best paper) at NAACL 19 (already **800+ citations**)

ELMo vs BERT
What happened at EMNLP 18

- Allen Institute of AI (AI2) distributed **Elmo stuffed dolls** at EMNLP ‘18 to advertise their pre-trained language model “ELMo” published in early 2018

- Google uploaded the BERT paper to arXiv **3 weeks before** the conference

- At the conference, everybody talked about **the BERT paper** (not ELMo), holding the Elmo doll

Family Tree of Pre-trained LMs

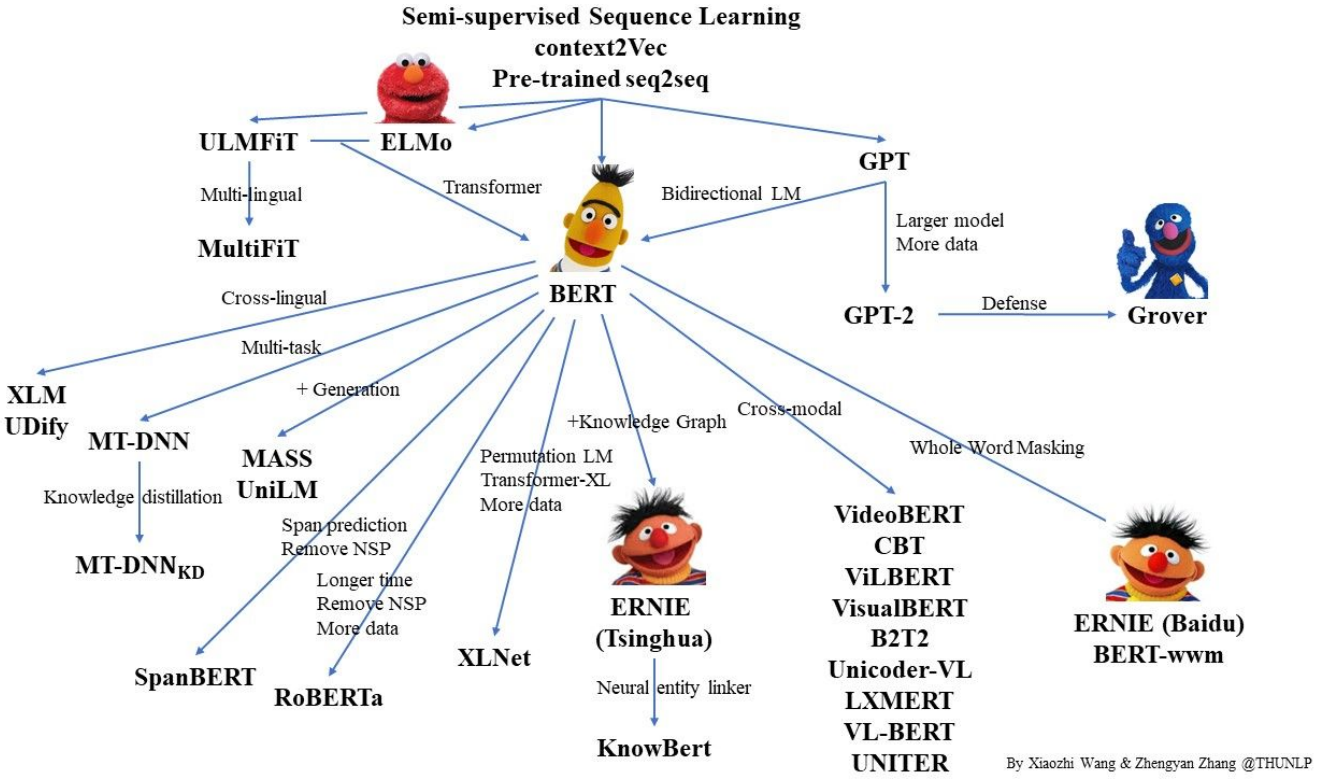

https://github.com/thunlp/PLMpapers

Pre-trained Model War: Rapid Increase in Model Size

log scale

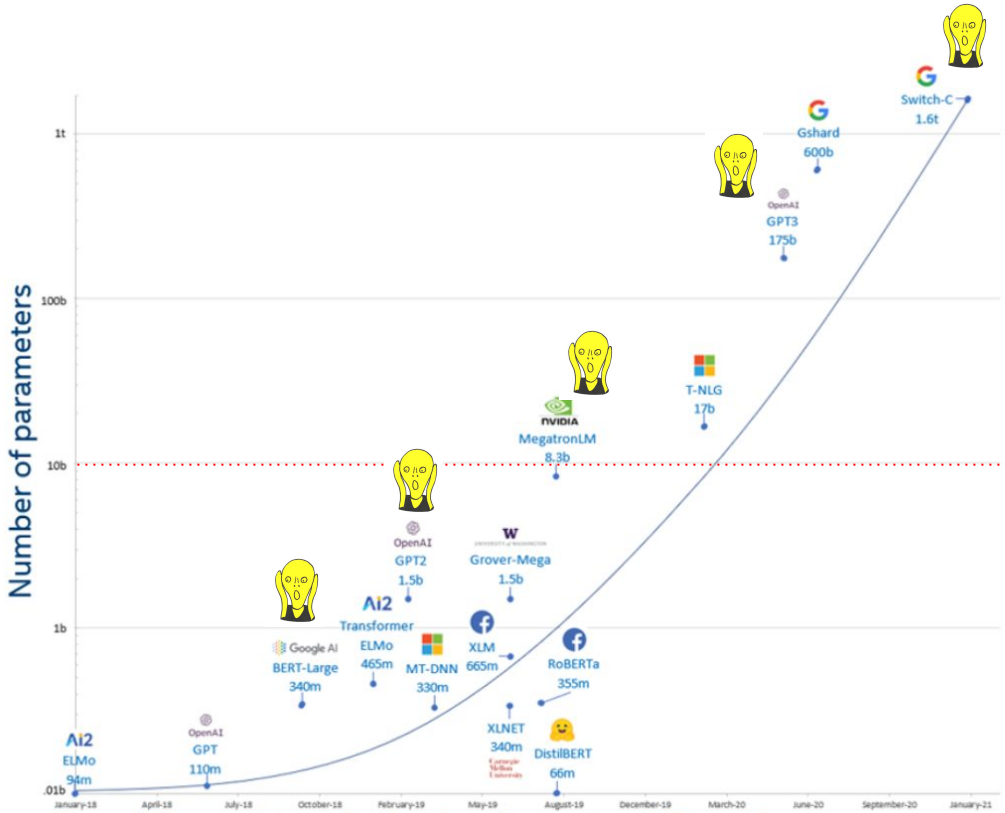

Figure 1: Exponential growth of number of parameters in DL models

2018 2019 2020 2021

Pre-trained Language Models: Categorization

- Most pre-trained LMs can be categorized into the following 3 patterns
  - Today → 1) Transformer **Encoder-only** Models (e.g., BERT, RoBERTa, ALBERT)
  - 2) Transformer **Decoder-only** Models (e.g., GPT-2/3)
  - 3) Transformer **Encoder-Decoder** Models (e.g., BART, T5)

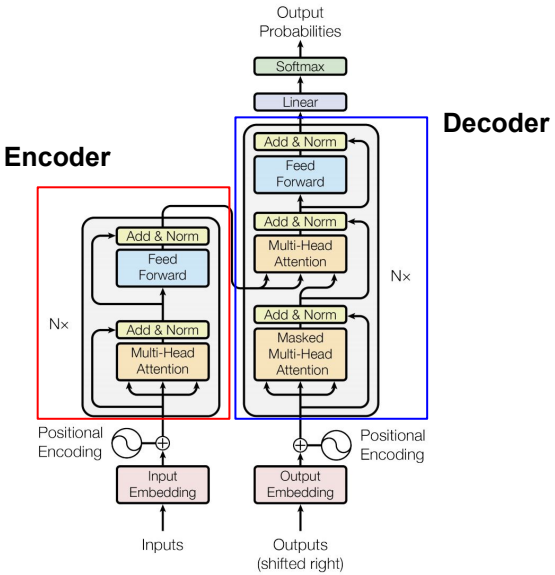

Preliminary: Neural Language Model [Bengio et al. 2003]

- Modeling the probability of a token sequence in the same manner as **N-gram language model**

$$\hat{P}(w_1^T) = \prod_{t=1}^{T} \hat{P}(w_t | w_1^{t-1})$$

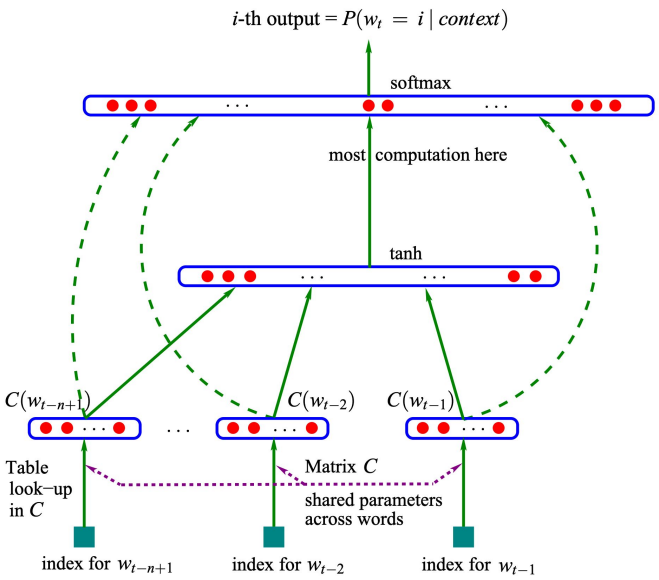

Y. Bengio et al. “A Neural Probabilistic Language Model” JMLR 2003

Preliminary: Neural Language Model [Bengio et al. 2003]

- Modeling the probability of a token sequence in the same manner as **N-gram language model**

$$\hat{P}(w_1^T) = \prod_{t=1}^{T} \hat{P}(w_t | w_1^{t-1})$$

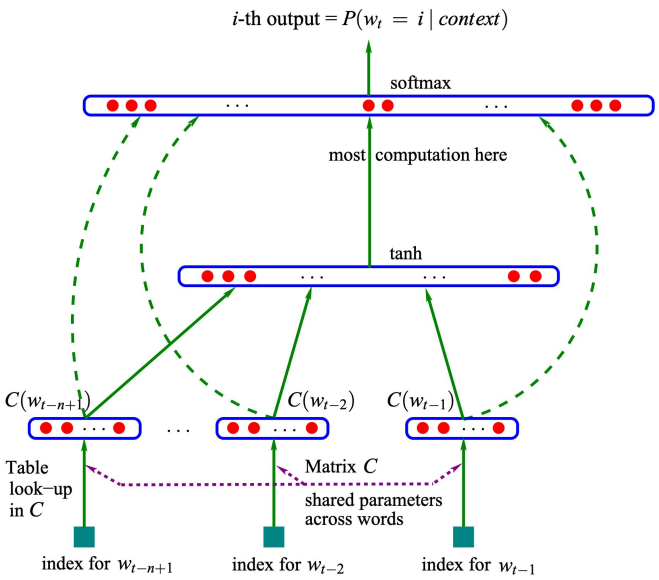

Does it remind you of word2vec (CBOW/Skip-gram)?

Y. Bengio et al. “A Neural Probabilistic Language Model” JMLR 2003

Another Neural Language Model: RNN-LM

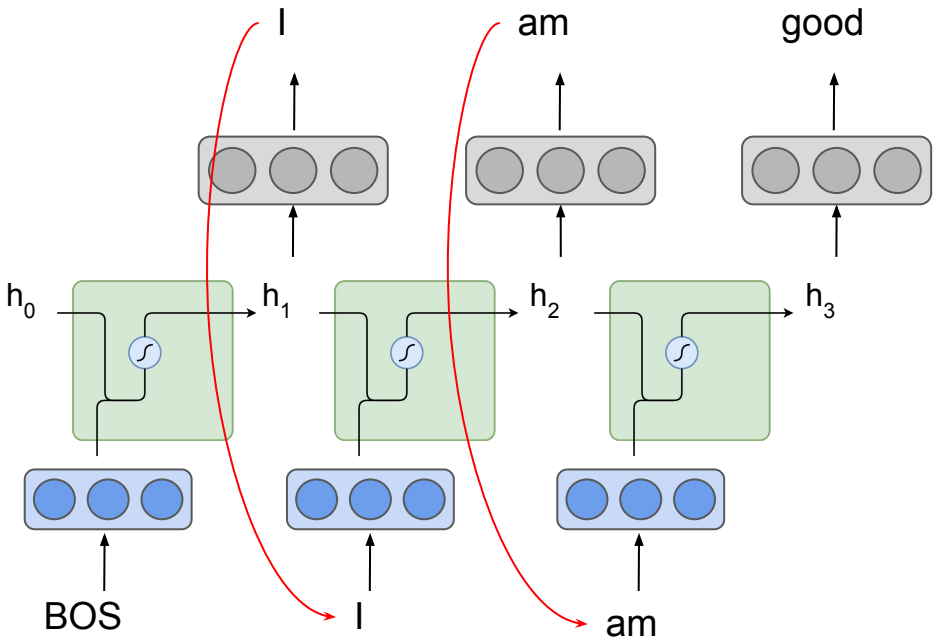

Another Neural Language Model: RNN-LM

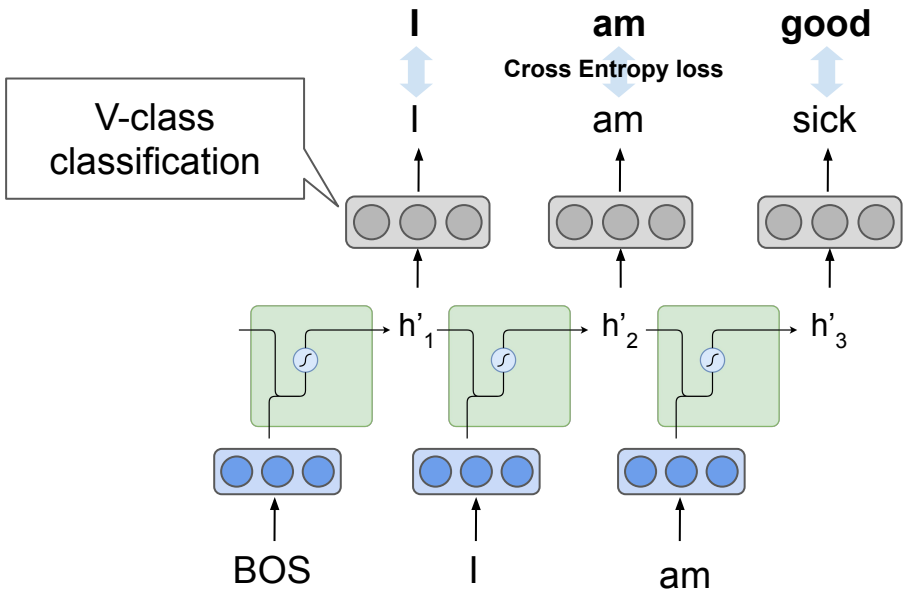

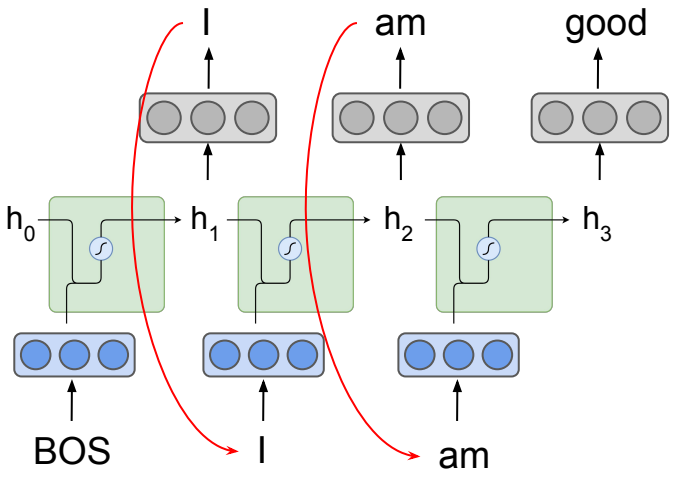

What does the output layer do at each step?

- **Token probability** given the context $P(x_t | x_{1:t-1})$

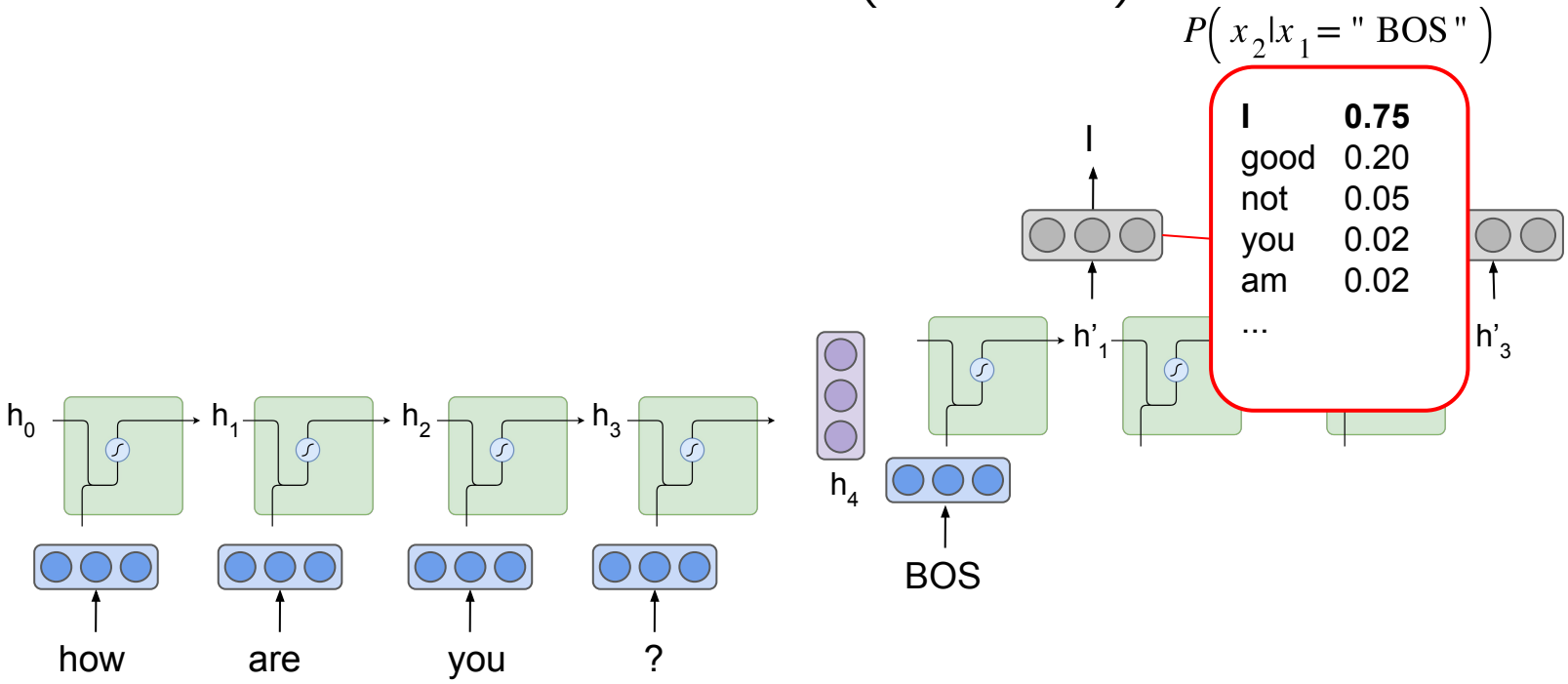

BERT Basic Architecture

BERT = (pre-trained) Transformer Encoder
(= Stacked Transformer Encoder Blocks)

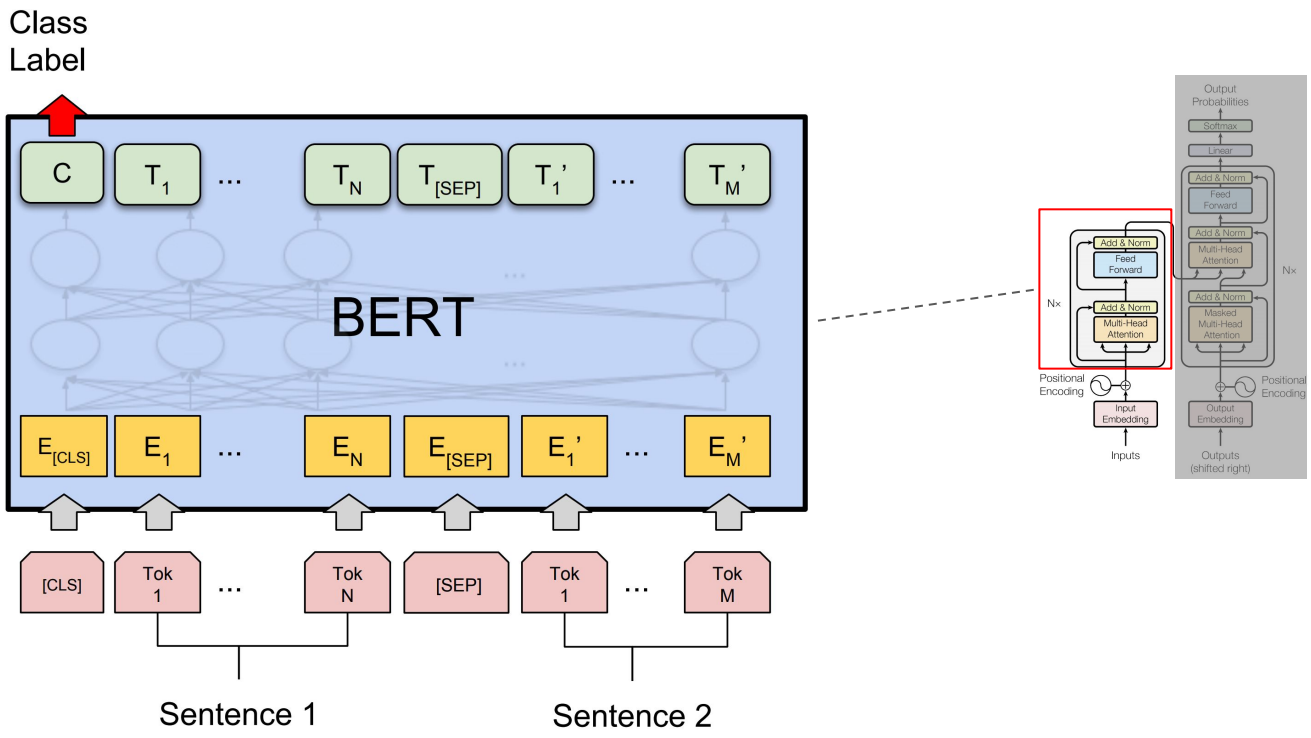

Key Point: Self-Attention

- Any input tokens attend **all input tokens** (i.e., “full” attention)

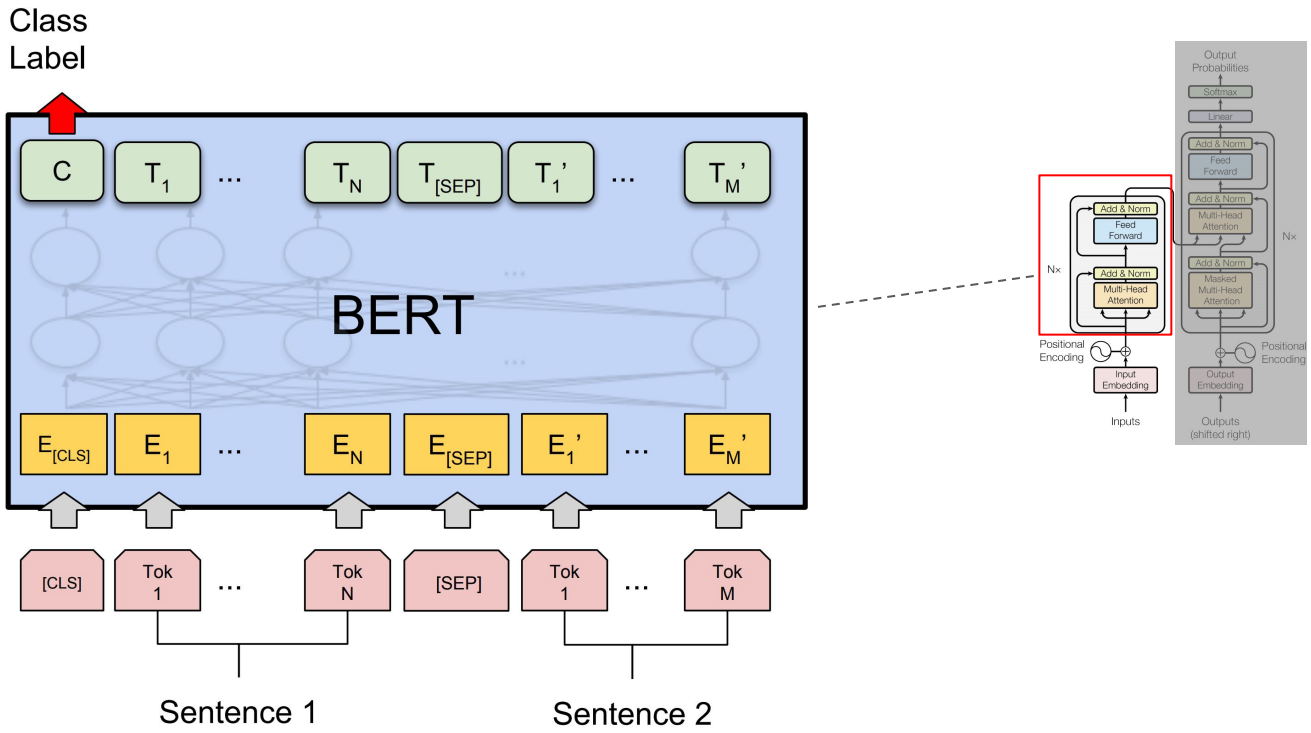

Key Point: Self-Attention

- Any input tokens attend **all input tokens** (i.e., “full” attention)

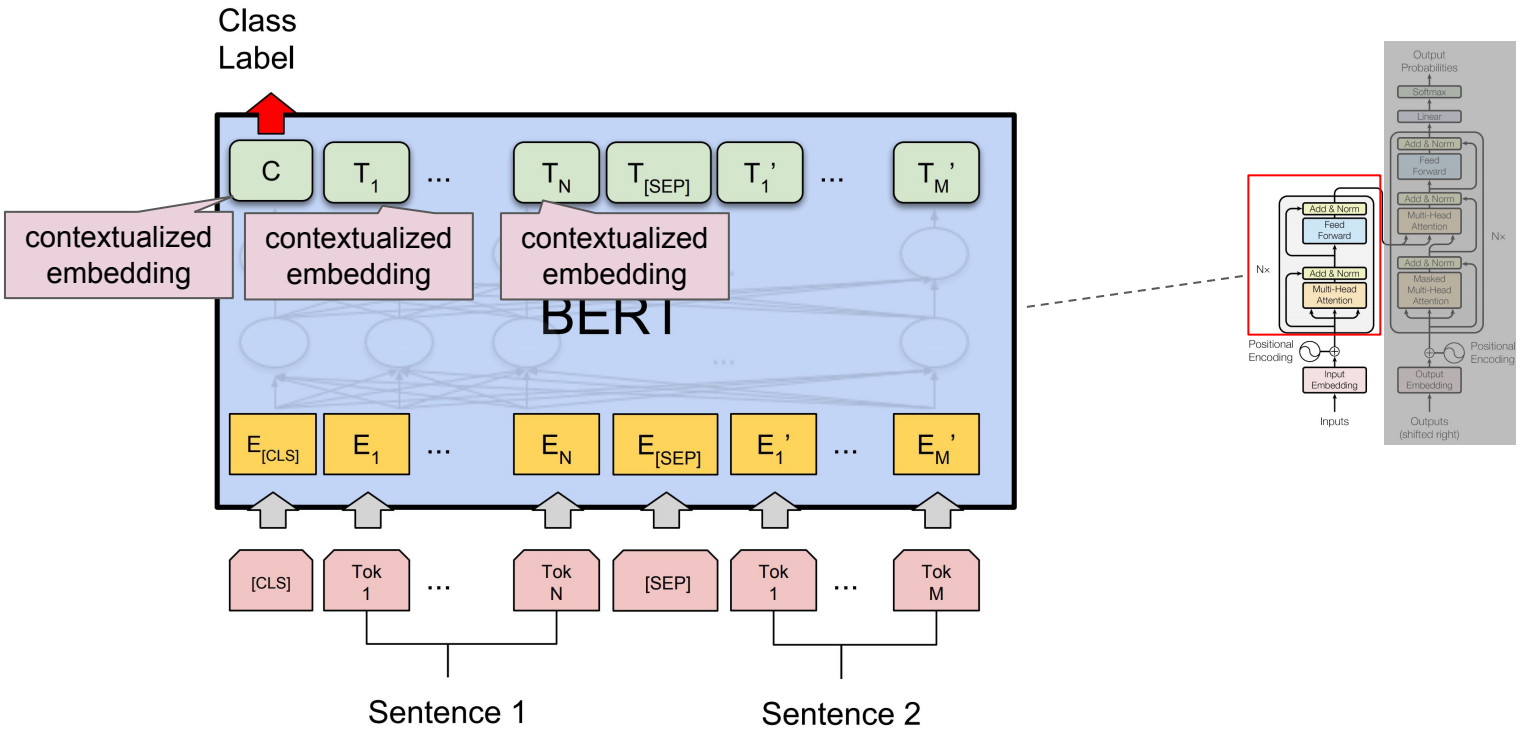

Dummy Symbols: [CLS] & [SEP]

- [CLS]: A class label
- [SEP]: A separator between two sequences

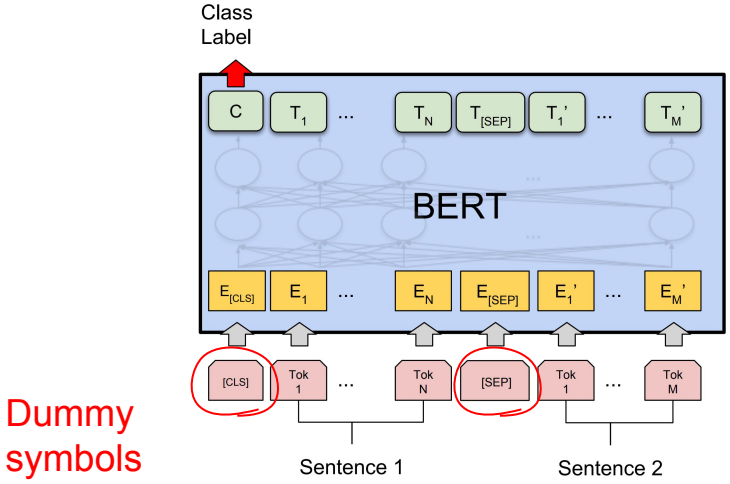

(*) In the vocabulary set, each dummy symbol has its own token ID

BERT Input Embeddings

- Summation of **3 different embeddings**

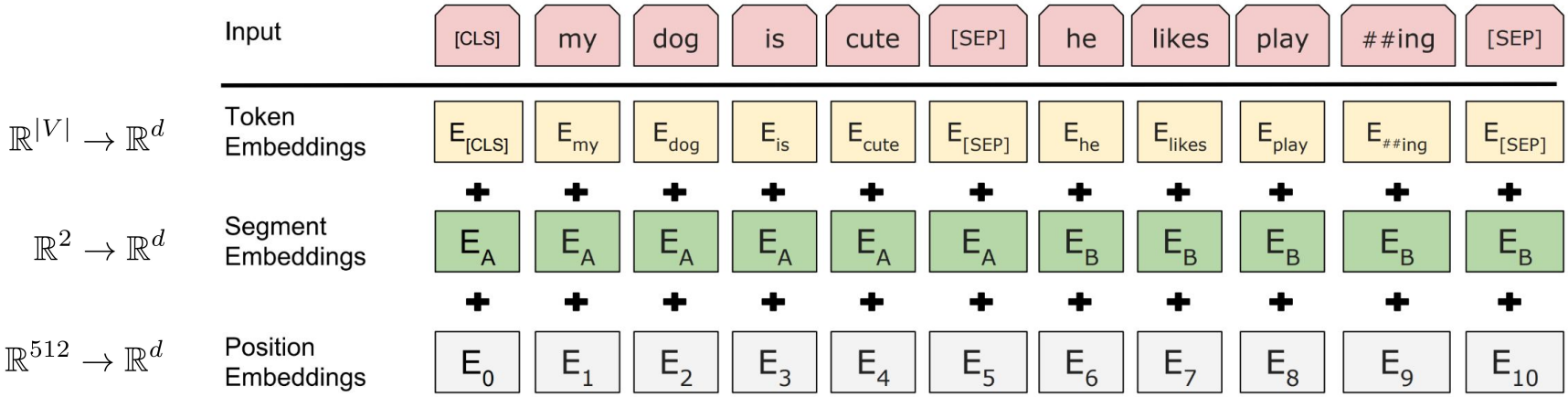

BERT Input Embeddings: (1) Token Embeddings

- Token IDs → Dense vectors

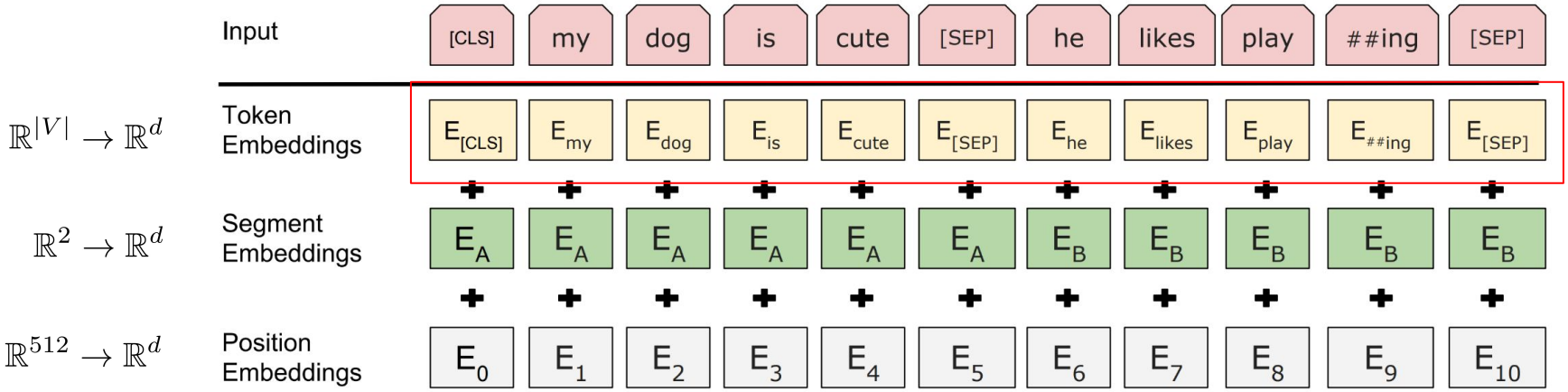

BERT Input Embeddings: (2) Segment Embeddings

- For sequence-pair classification tasks

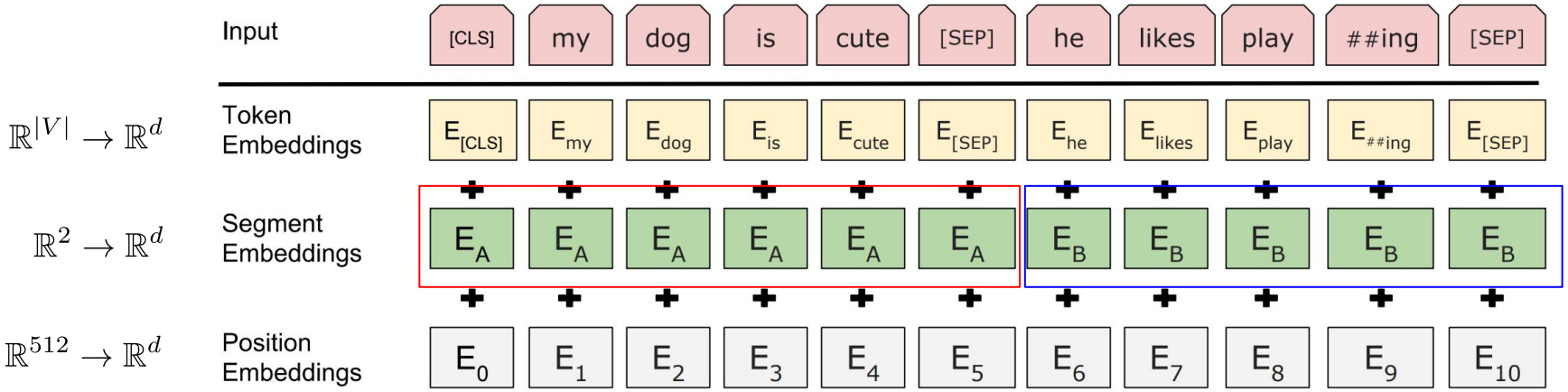

BERT Input Embeddings: (3) Positional Embeddings

- Different from Transformer's positional embeddings, they are **simply embeddings for position IDs** (i.e., 1, 2, 3, ...)
  - i.e., one-hot vector representations → dense vector representations

$$PE_{(pos,2i)} = sin(pos/10000^{2i/d_{\text{model}}})$$
$$PE_{(pos,2i+1)} = cos(pos/10000^{2i/d_{\text{model}}})$$

Transformer

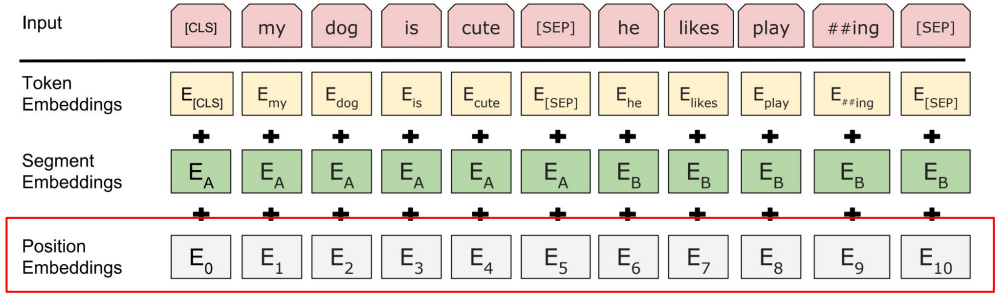

BERT

BERT Models

- BERT-base (L=12, H=768, A=12)
  - 110M parameters
- BERT-large (L=24, H=1024, A=16)
  - 340M parameters

L: # of Transformer Encoder blocks
H: Hidden size
A: # of attention heads

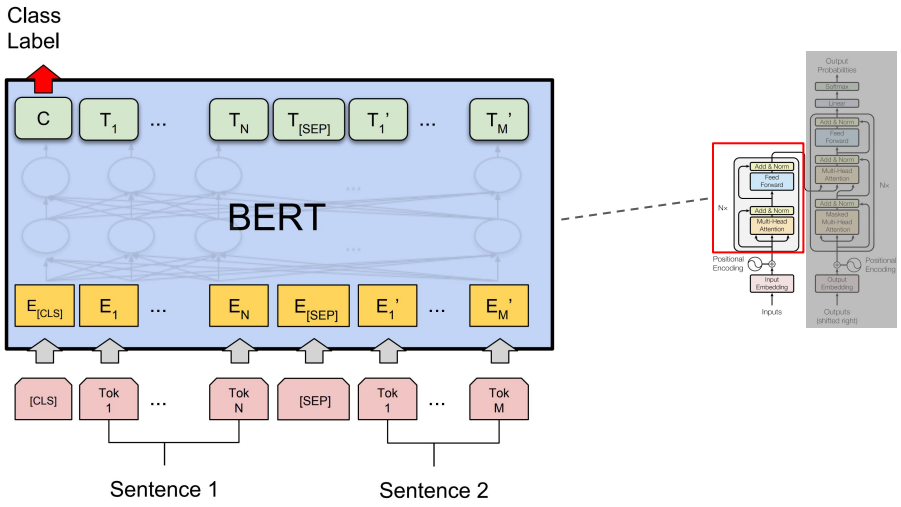

Recap: How Multi-head Self-Attention Works

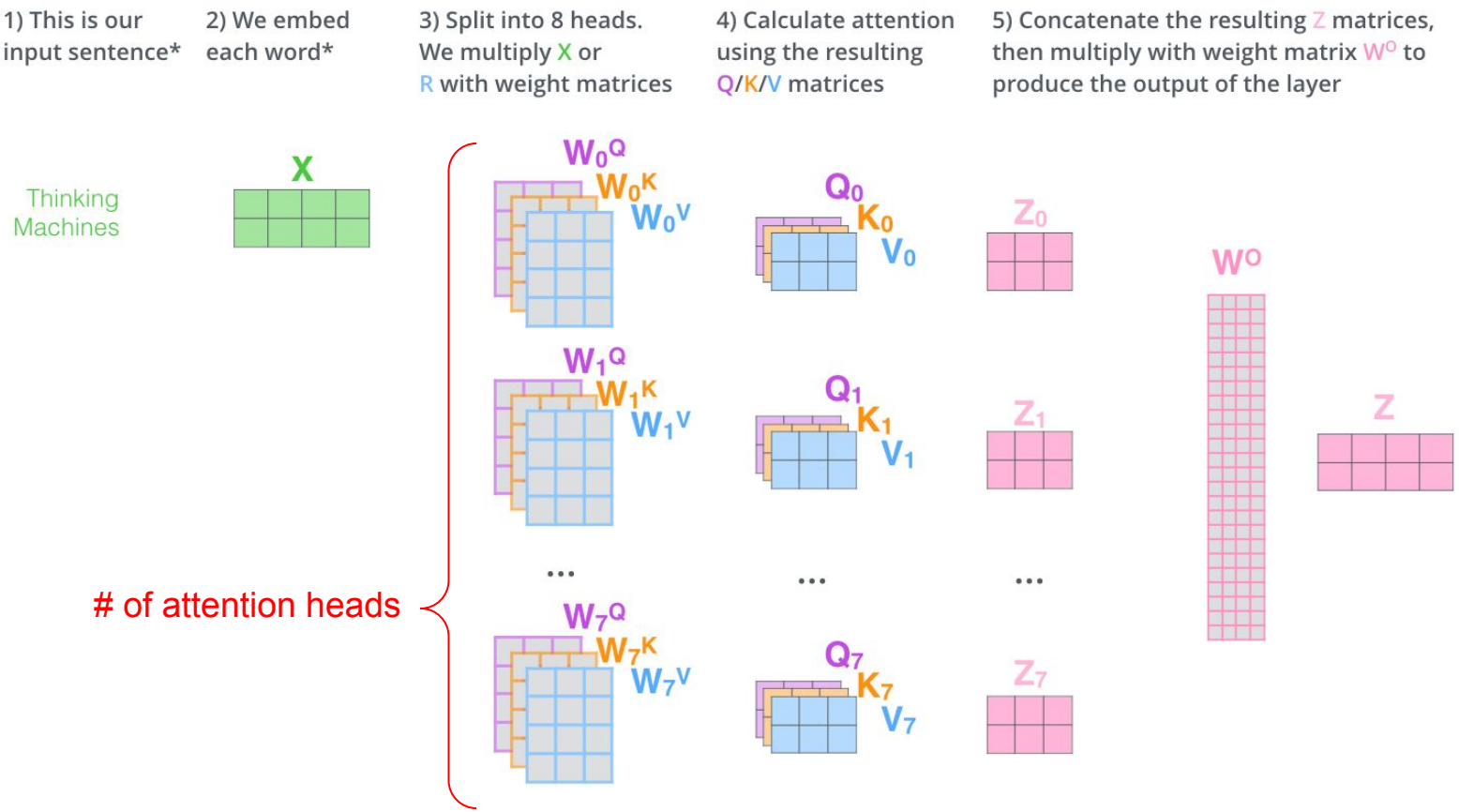

BERT Tokenizer: WordPiece

- A **subword tokenizer** that initializes the vocabulary with **individual characters** and then **iteratively adds the most frequent combinations** of symbols in the vocabulary
  - No out-of-vocabulary issue!
  - Basically the same as **Byte Pair Encoding (BPE)**

- **Word**: Jet makers feud over seat width with big orders at stake
- **wordpieces**: _J et _makers _fe ud _over _seat _width _with _big _orders _at _stake

(*) A whitespace is now considered one character

Byte Pair Encoding: String Compression Example

aaabdaaabac

Byte Pair Encoding: String Compression Example

aaabd**aa**abac

ZabdZabac (Z=aa)

Byte Pair Encoding: String Compression Example

aaabd**aa**abac

Z**ab**dZ**ab**ac (Z=aa)

ZYdZYac (Y=ab Z=aa)

Byte Pair Encoding: String Compression Example

aaabd**aa**abac

Z**ab**dZ**ab**ac (Z=aa)

ZYd**ZY**ac (Y=ab Z=aa)

XdXac (X=ZY Y=ab Z=aa)

Byte Pair Encoding: String Compression Example

aaabd**aa**abac

Z**ab**dZ**ab**ac (Z=aa)

ZYd**ZY**ac (Y=ab Z=aa)

XdXac (X=ZY Y=ab Z=aa)

Vocabulary: {aaab, ab, aa, a, c, d}

Tokenizers for BERT (Pre-trained LMs): Takeaway

- A subword tokenizer (i.e., No out-of-vocabulary issue)
- [important!] Need to be “trained” on text data

→ Pre-trained language model & **pre-trained** tokenizer <u>model</u> are coupled

```
>>> from transformers import AutoTokenizer, AutoModel

>>> tokenizer = AutoTokenizer.from_pretrained("bert-base-uncased")
>>> model = AutoModel.from_pretrained("bert-base-uncased")

>>> inputs = tokenizer("Hello world!", return_tensors="pt")
>>> outputs = model(**inputs)
```

Pre-training in BERT

Recap: Pre-training & Fine-tuning

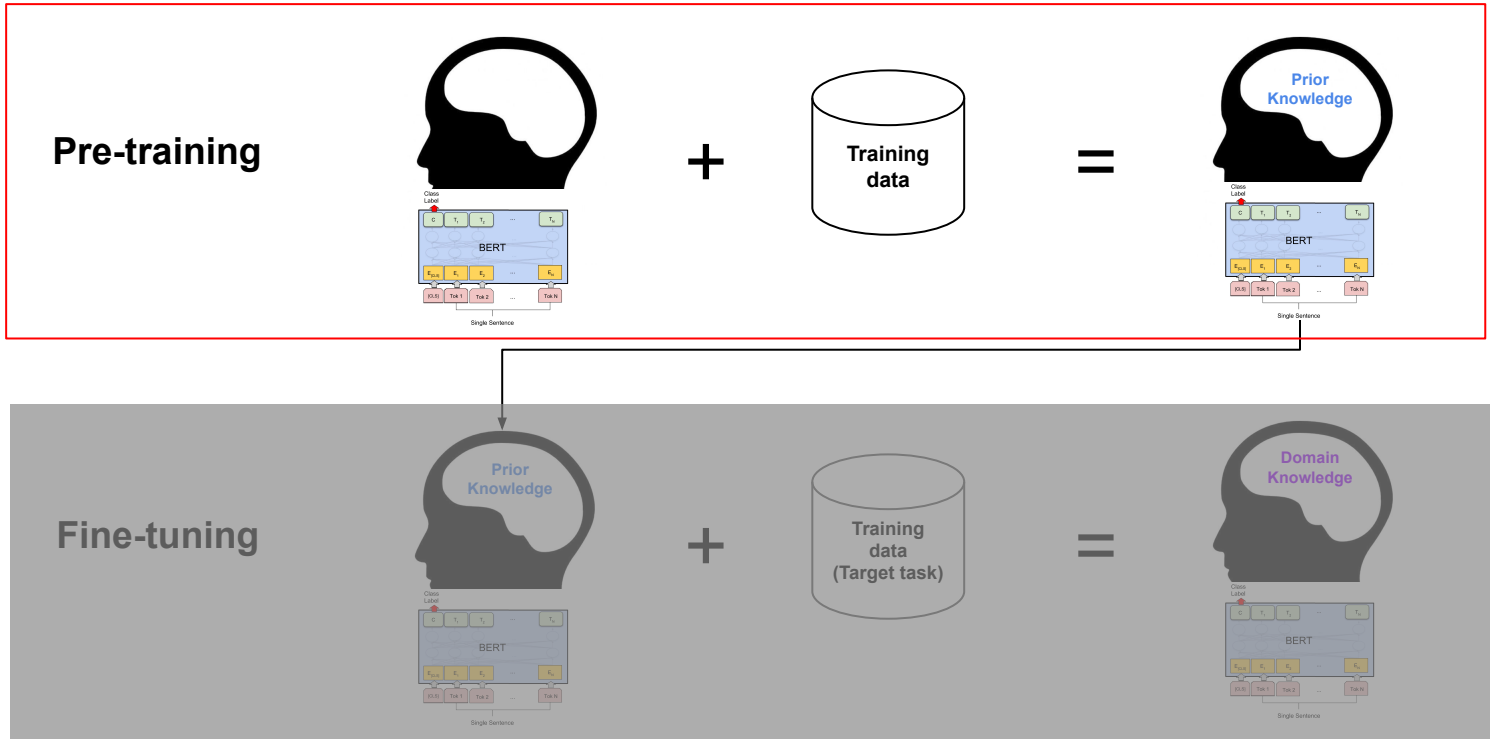

Pre-training = (A) Pre-training Method(s) + (B) Corpus

- (A) **How to learn**: Pre-training method(s)
- (B) **What to learn from**: Textual corpora

Pre-training

BERT Pre-training

- Pre-training Methods
  - 1) Masked Language Model
  - 2) Next Sentence Prediction

- Pre-training corpus

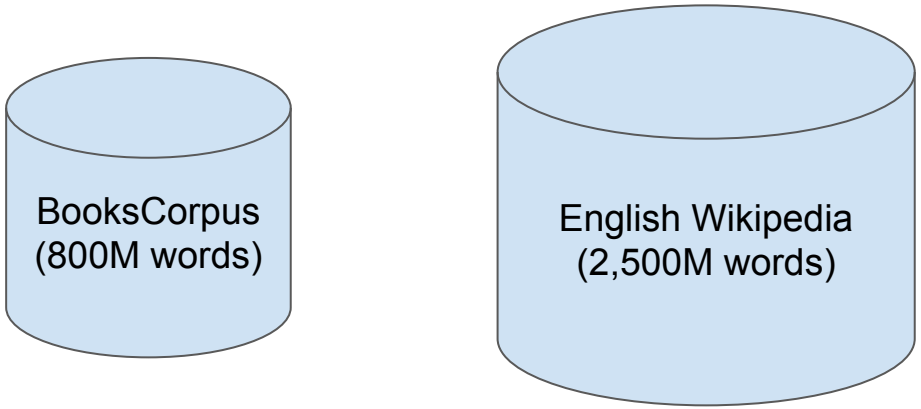

BERT Pre-training

- Pre-training Methods
  - 1) Masked Language Model
  - 2) Next Sentence Prediction

Why those two?

- Pre-training corpus

Why those two?

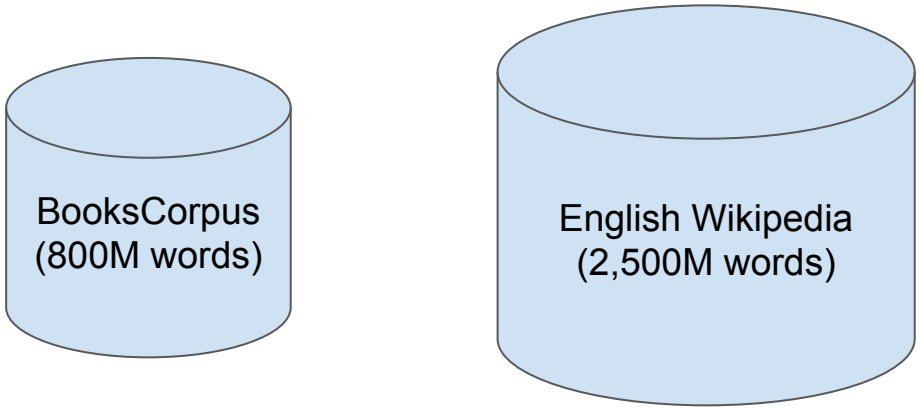

Masked Language Model (MLM)

- Step 1: Replace **randomly selected tokens** with **[MASK] tokens**
- Step 2: Train the model to **reconstruct the original token**

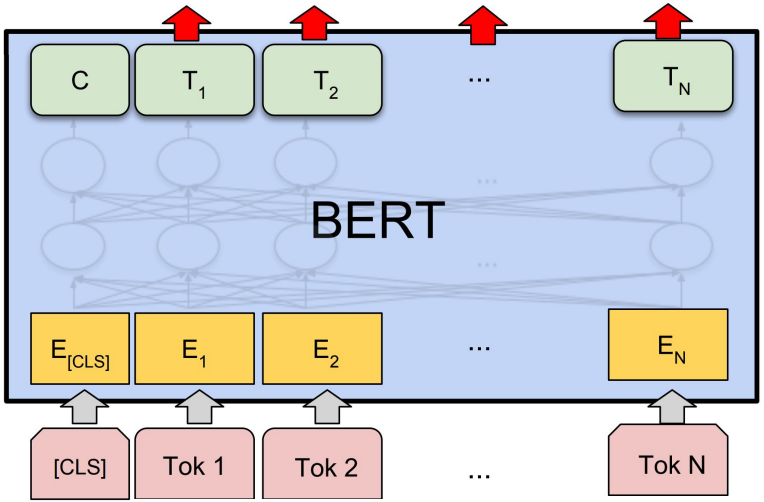

Masked Language Model (MLM)

- Step 1: Replace **randomly selected tokens** with **[MASK] tokens**
- Step 2: Train the model to **reconstruct the original token**

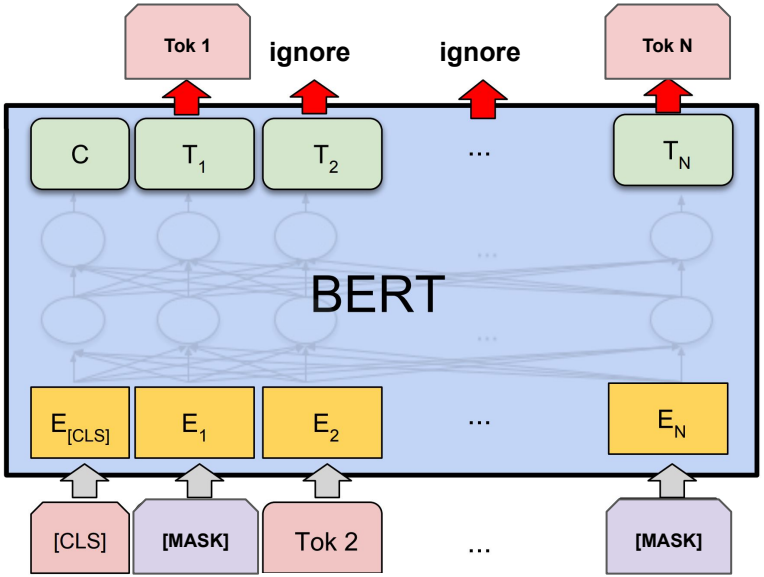

Masked Language Model (MLM)

- Step 1: Replace **randomly selected tokens** with **[MASK] tokens**
- Step 2: Train the model to **reconstruct the original token**

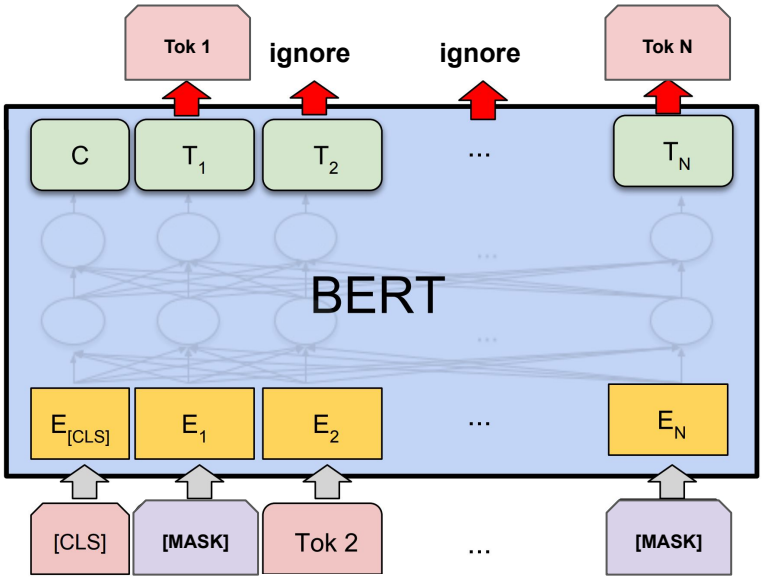

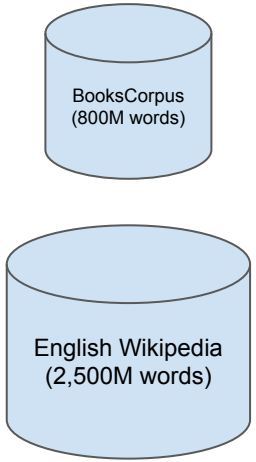

Masked Language Model (MLM)

- Step 1: Replace **randomly selected tokens** with **[MASK] tokens**
- Step 2: Train the model to **reconstruct the original token**

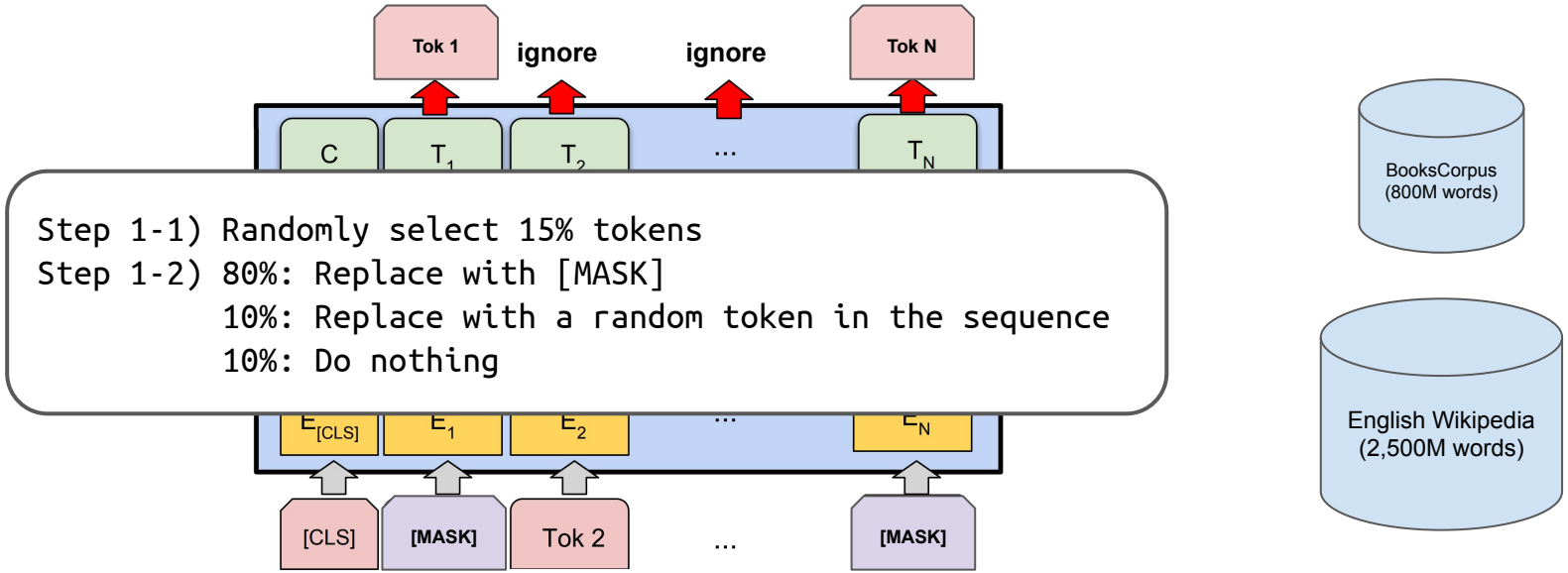

Autoencoders: Training (self-reconstruction)

- Simply use input data as the target data

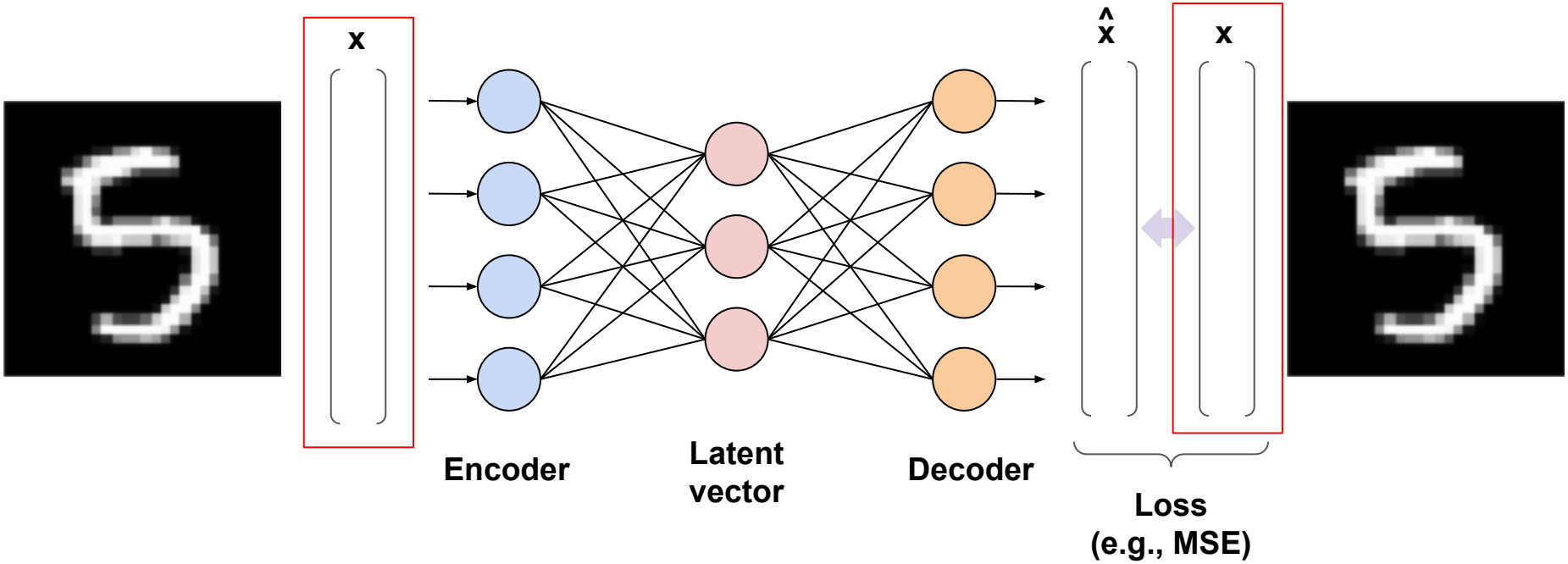

Next Sentence Prediction (NSP)

- Step 1) Sample sentences A and B such that
  - 50%: B is **actual next sentence** that follows A
  - 50%: random sentence from the corpus
- Step 2) Train the model to predict the correct label

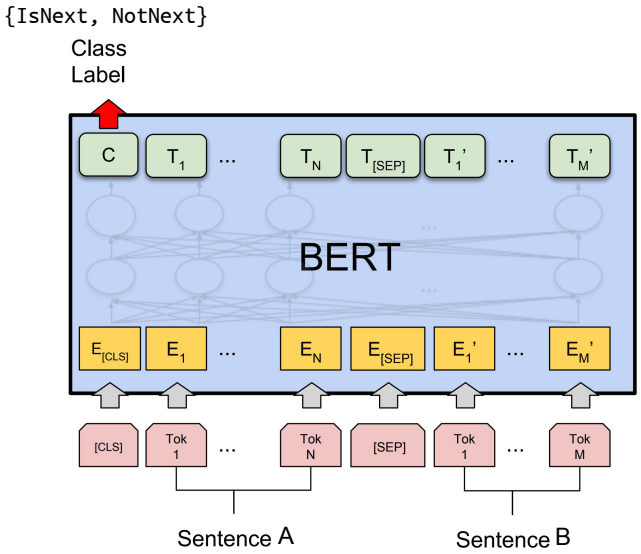

Self-supervised Learning for Pre-training

- Both Masked Language Model and Next Sentence Prediction **do NOT require** any additional labels
- This type of learning process is often called **self-supervised learning**

- BERT variants essentially
  - (1) use different (self-supervised) pre-training methods
  - (2) use different pre-training corpora
  - (3) use different model architectures
- … and claim that they are better than BERT

Fine-tuning in BERT

Recap: Pre-training & Fine-tuning

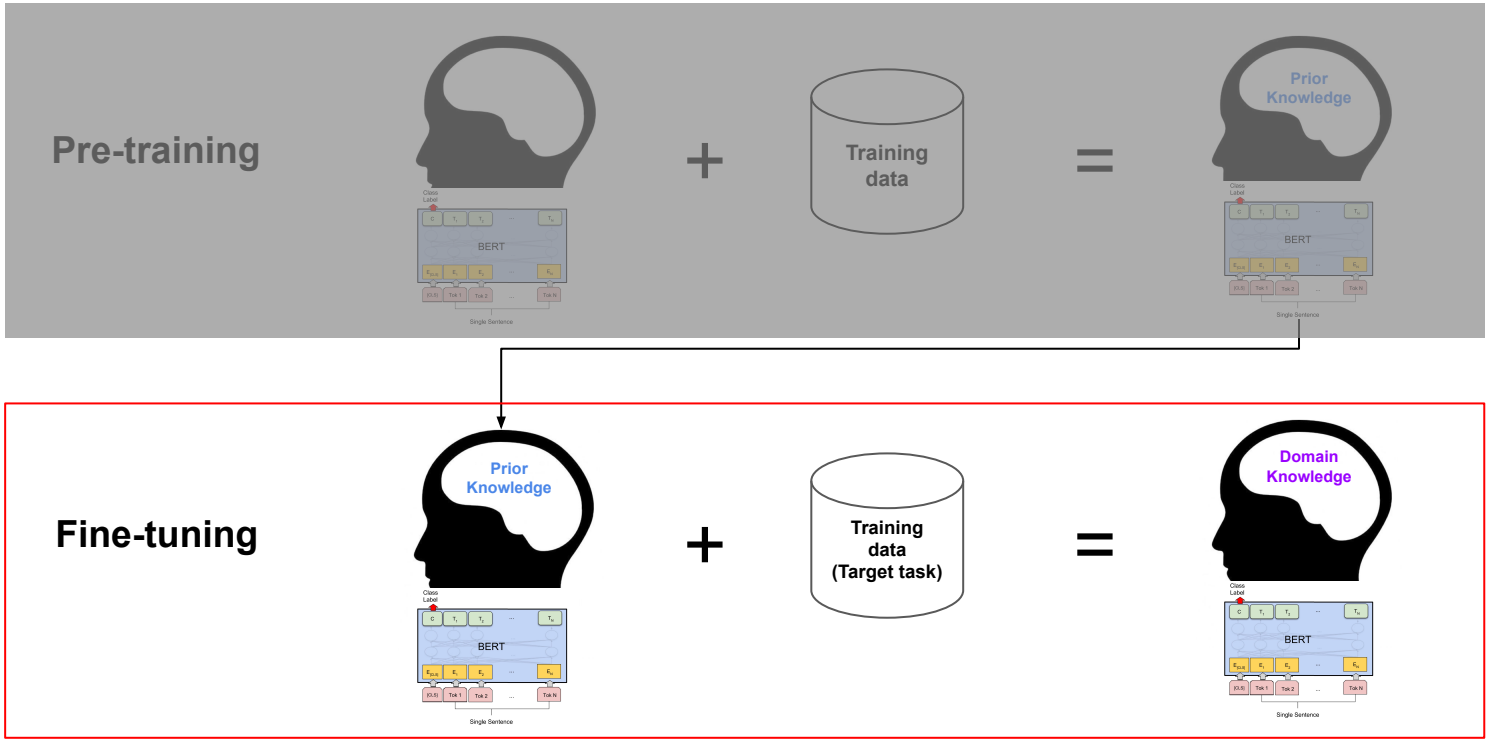

Single-sentence Classification

- Text classification tasks

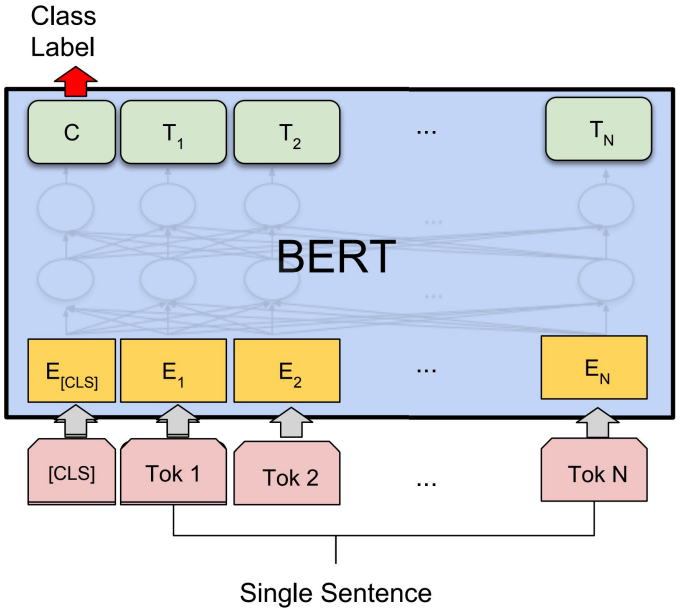

Sentence-pair Classification

- Textual entailment recognition and duplicate question detection tasks

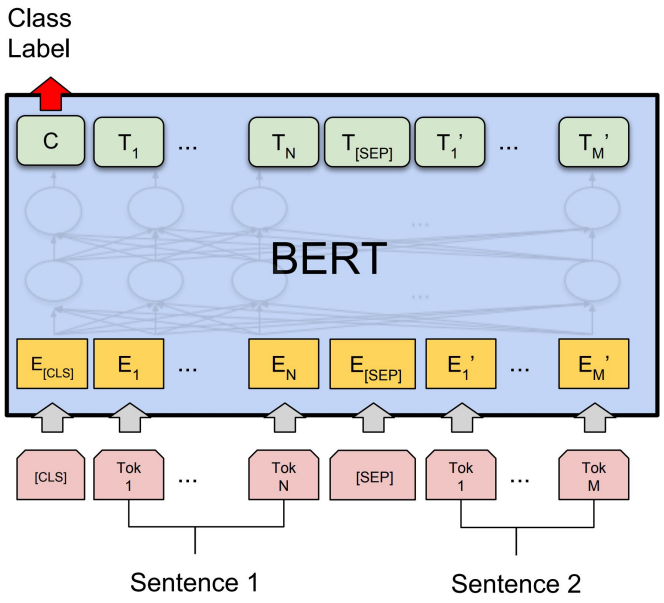

Recognizing Textual Entailment (RTE) aka Natural Language Inference

- Give two texts, judge if one text is **entailed** by the other

Gold-standard label

Text (premise)	Judgments	Hypothesis
A man inspects the uniform of a figure in some East Asian country.	contradiction C C C C C	The man is sleeping
An older and younger man smiling.	neutral N N E N N	Two men are smiling and laughing at the cats playing on the floor.
A black race car starts up in front of a crowd of people.	contradiction C C C C C	A man is driving down a lonely road.
A soccer game with multiple males playing.	entailment E E E E E	Some men are playing a sport.
A smiling costumed woman is holding an umbrella.	neutral N N E C N	A happy woman in a fairy costume holds an umbrella.

The Stanford NLI dataset https://nlp.stanford.edu/projects/snli/

Token Classification

- Sequential tagging problems (e.g., Named Entity Recognition)

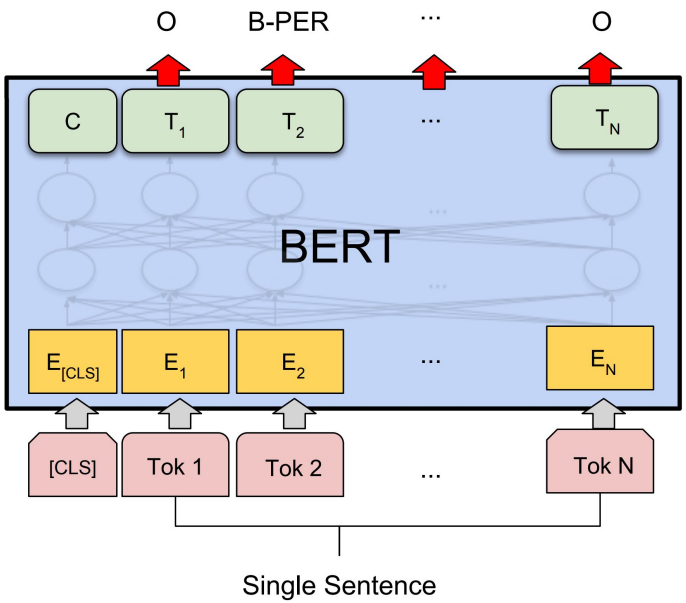

Question Answering

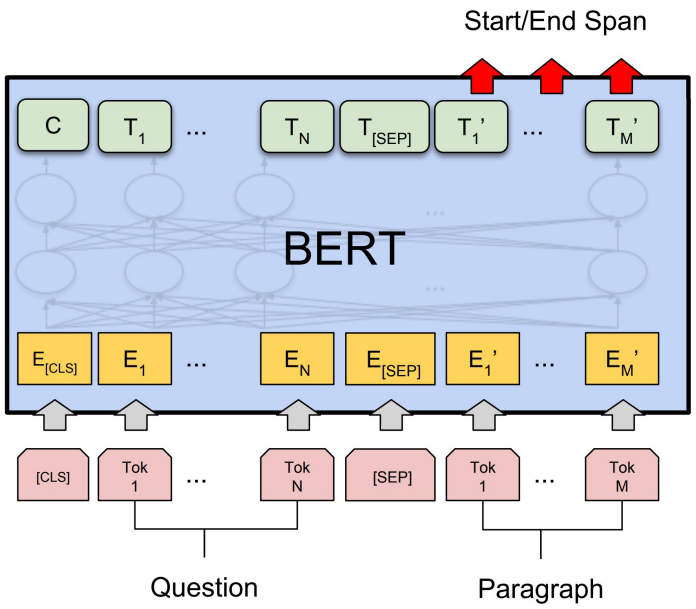

(Extractive) Question Answering

- Example: SQuAD v1.1
  - Input: Question & Passage
  - Output: Answer span

Question: Which team won Super Bowl 50?

Passage

Super Bowl 50 was an American football game to determine the champion of the National Football League (NFL) for the 2015 season. The American Football Conference (AFC) champion Denver Broncos defeated the National Football Conference (NFC) champion Carolina Panthers 24–10 to earn their third Super Bowl title. The game was played on February 7, 2016, at Levi's Stadium in the San Francisco Bay Area at Santa Clara, California.

Question Answering

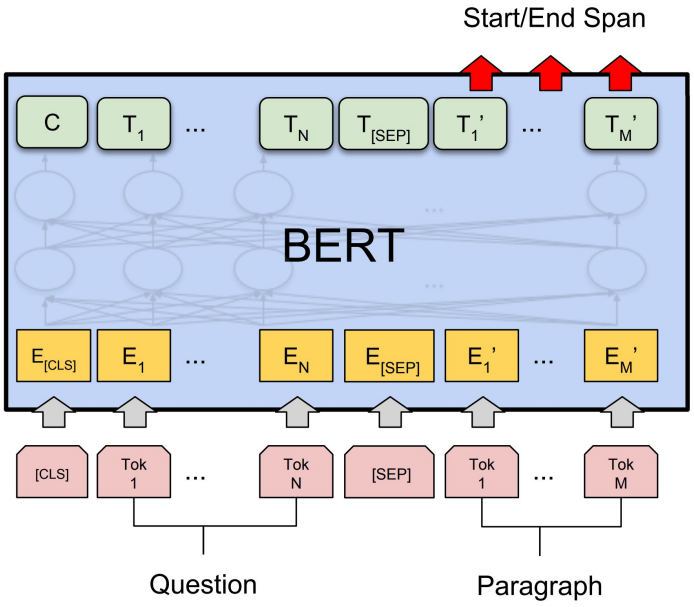

the B embedding. We only introduce a start vector $S \in \mathbb{R}^H$ and an end vector $E \in \mathbb{R}^H$ during fine-tuning. The probability of word i being the start of the answer span is computed as a dot product between T_i and S followed by a softmax over all of the words in the paragraph: $P_i = \frac{e^{S \cdot T_i}}{\sum_j e^{S \cdot T_j}}$. The analogous formula is used for the end of the answer span. The score of a candidate span from position i to position j is defined as $S \cdot T_i + E \cdot T_j$, and the maximum scoring span where $j \geq i$ is used as a prediction. The training objective is the

(* The task could be solved as a sequential tagging problem, which may be overkill)

BERT Established New SoTA Performance on the GLUE Benchmark

System	MNLI-(m/mm)	QQP	QNLI	SST-2	CoLA	STS-B	MRPC	RTE	**Average**
	392k	363k	108k	67k	8.5k	5.7k	3.5k	2.5k	-
Pre-OpenAI SOTA	80.6/80.1	66.1	82.3	93.2	35.0	81.0	86.0	61.7	74.0
BiLSTM+ELMo+Attn	76.4/76.1	64.8	79.8	90.4	36.0	73.3	84.9	56.8	71.0
OpenAI GPT	82.1/81.4	70.3	87.4	91.3	45.4	80.0	82.3	56.0	75.1
$\text{BERT}_{\text{BASE}}$	84.6/83.4	71.2	90.5	93.5	52.1	85.8	88.9	66.4	79.6
$\text{BERT}_{\text{LARGE}}$	**86.7/85.9**	**72.1**	**92.7**	**94.9**	**60.5**	**86.5**	**89.3**	**70.1**	**82.1**

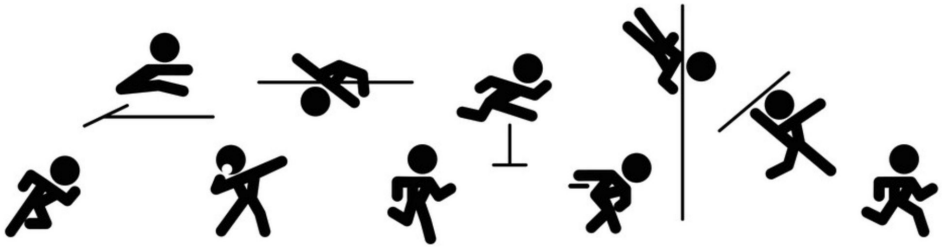

GLUE is a “decathlon-style” benchmark, which consists of multiple NLP tasks

GLUE Leaderboard

https://gluebenchmark.com/

GLUE SuperGLUE Paper Code Tasks Leaderboard FAQ Diagnostics Submit Login

Rank	Name	Model	URL	Score	CoLA	SST-2	MRPC	STS-B	QQP	MNLI-m	MNLI-mm	QNLI	RTE	WNLI	AX
1	ERNIE Team - Baidu	ERNIE		91.1	75.5	97.8	93.9/91.8	93.0/92.6	75.2/90.9	92.3	91.7	97.3	92.6	95.9	51.7
2	AliceMind & DIRL	StructBERT + CLEVER		91.0	75.3	97.7	93.9/91.9	93.5/93.1	75.6/90.8	91.7	91.5	97.4	92.5	95.2	49.1
3	DeBERTa Team - Microsoft	DeBERTa / TuringNLRv4		90.8	71.5	97.5	94.0/92.0	92.9/92.6	76.2/90.8	91.9	91.6	99.2	93.2	94.5	53.2
4	liangzhu ge	DeBERTa + CLEVER		90.8	73.4	97.5	92.8/90.4	93.2/92.9	76.3/90.8	92.1	91.7	96.5	92.8	96.6	35.2
5	HFL iFLYTEK	MacALBERT + DKM		90.7	74.8	97.0	94.5/92.6	92.8/92.6	74.7/90.6	91.3	91.1	97.8	92.0	94.5	52.6
+ 6	PING-AN Omni-Sinitic	ALBERT + DAAF + NAS		90.6	73.5	97.2	94.0/92.0	93.0/92.4	76.1/91.0	91.6	91.3	97.5	91.7	94.5	51.2
7	T5 Team - Google	T5		90.3	71.6	97.5	92.8/90.4	93.1/92.8	75.1/90.6	92.2	91.9	96.9	92.8	94.5	53.1
8	Microsoft D365 AI & MSR AI & GATECH	MT-DNN-SMART		89.9	69.5	97.5	93.7/91.6	92.9/92.5	73.9/90.2	91.0	90.8	99.2	89.7	94.5	50.2
+ 9	Huawei Noah's Ark Lab	NEZHA-Large		89.8	71.7	97.3	93.3/91.0	92.4/91.9	75.2/90.7	91.5	91.3	96.2	90.3	94.5	47.9
+ 10	Zihang Dai	Funnel-Transformer (Ensemble B10-10-10H1024)		89.7	70.5	97.5	93.4/91.2	92.6/92.3	75.4/90.7	91.4	91.1	95.8	90.0	94.5	51.6
+ 11	ELECTRA Team	ELECTRA-Large + Standard Tricks		89.4	71.7	97.1	93.1/90.7	92.9/92.5	75.6/90.8	91.3	90.8	95.8	89.8	91.8	50.7
+ 12	Microsoft D365 AI & UMD	FreeLB-RoBERTa (ensemble)		88.4	68.0	96.8	93.1/90.8	92.3/92.1	74.8/90.3	91.1	90.7	95.6	88.7	89.0	50.1
13	Junjie Yang	HIRE-RoBERTa		88.3	68.6	97.1	93.0/90.7	92.4/92.0	74.3/90.2	90.7	90.4	95.5	87.9	89.0	49.3
14	Facebook AI	RoBERTa		88.1	67.8	96.7	92.3/89.8	92.2/91.9	74.3/90.2	90.8	90.2	95.4	88.2	89.0	48.7
+ 15	Microsoft D365 AI & MSR AI	MT-DNN-ensemble		87.6	68.4	96.5	92.7/90.3	91.1/90.7	73.7/89.9	87.9	87.4	96.0	86.3	89.0	42.8

Hands-on: BERT Fine-tuning Example

- Google Colab

Summary

- Pre-training & Fine-tuning framework
- Pre-trained language models
  - =~ Pre-trained Transformer models (in NLP)
- BERT
  - A pre-trained Transformer Encoder-only model
  - Dummy symbols: [CLS], [SEP]
  - Input embeddings
  - **4 Fine-tuning patterns**
    - Single-sentence classification
    - Sequence-pair classification
    - Token classification (i.e., sequential labeling)
    - Question Answering
  - Pre-training methods
    - Masked Language Model
    - Next Sentence Prediction

Next session

Pre-trained Language Models: Categorization

- Most pre-trained LMs can be categorized into the following 3 patterns
  - 1) Transformer **Encoder-only** Models (e.g., BERT, RoBERTa, ALBERT)
  - 2) Transformer **Decoder-only** Models (e.g., GPT-2/3)
  - 3) Transformer **Encoder-Decoder** Models (e.g., BART, T5)
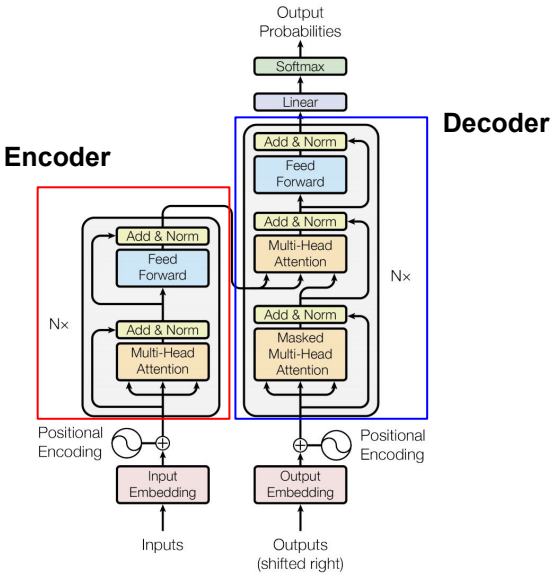
Next →