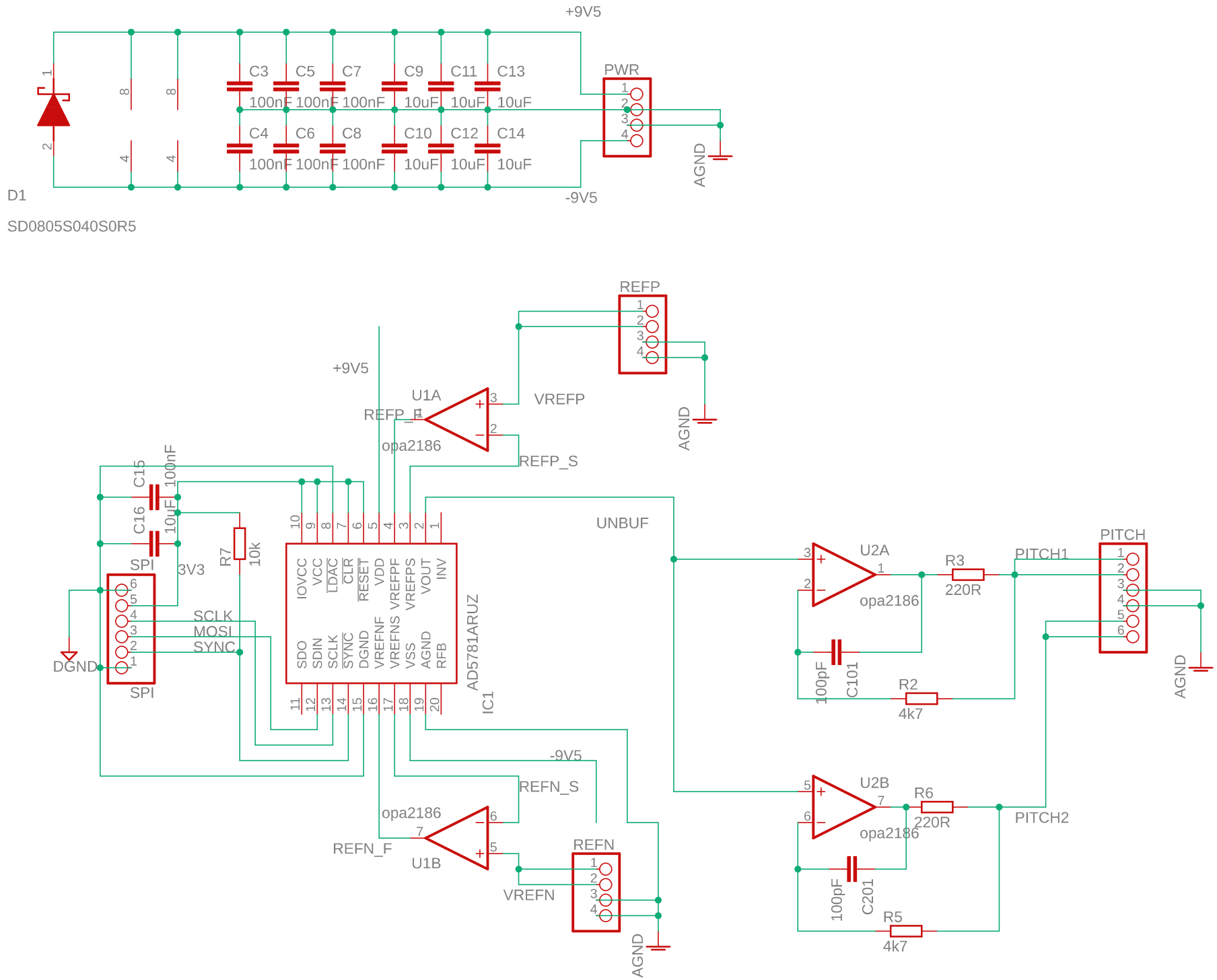
+9V5
-9V5
PWR
AGND
D1
SD0805S040S0R5
C3 100nF
C5 100nF
C7 100nF
C9 10uF
C11 10uF
C13 10uF
C4 100nF
C6 100nF
C8 100nF
C10 10uF
C12 10uF
C14 10uF
REFP
VREFP
REFP_F
REFP_S
U1A
opa2186
UNBUF
C15 100nF
C16 10uF
R7 10k
3V3
SPI
SCLK
MOSI
SYNC
DGND
IOVCC
VCC
LDAC
CLR
RESET
VDD
VREFPF
VREFPS
VOUT
INV
SDO
SDIN
SCLK
SYNC
DGND
VREFNF
VREFNS
VSS
AGND
RFB
AD5781ARUZ
IC1
U2A
R3 220R
PITCH1
PITCH
100pF C101
R2 4k7
U2B
R6 220R
PITCH2
100pF C201
R5 4k7
REFN_S
REFN_F
U1B
REFN
VREFN