Tali Cohen 329651871
Tamar Harizy 209927128

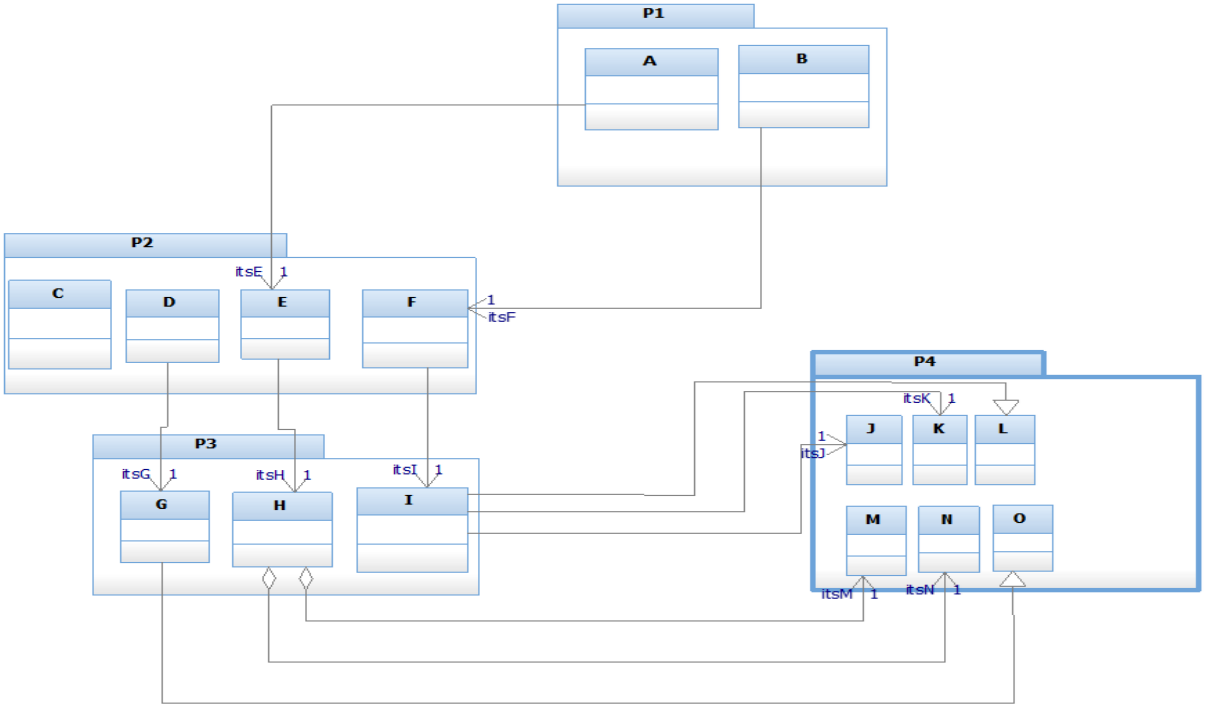

Figure1

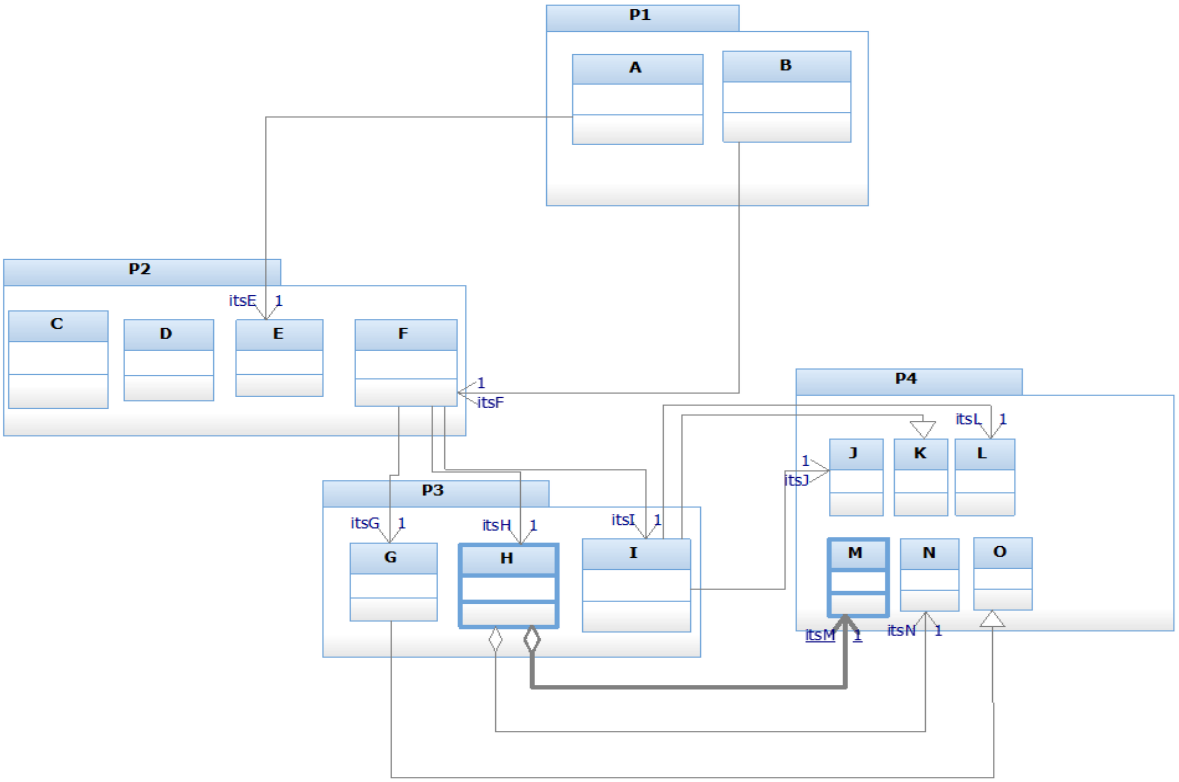

Figure2

Tali Cohen 329651871
Tamar Harizy 209927128

Figure 1 (question 1 part a)

PACKAGES	C_a	C_e	I	A	D	D’
P_1	0	2	1	0	0	0
P_2	2	3	3/5	½	0.0707	0.1
P_3	3	6	2/3	2/3	0.2357	1/3
P_4	3	0	0	1	0	0

Figure 2(question 1 part a)

PACKAGES	C_a	C_e	I	A	D	D’
P_1	0	2	1	0	0	0
P_2	2	3	3/5	½	0.0707	0.1
P_3	3	6	2/3	2/3	0.2357	1/3
P_4	3	0	0	1	0	0

NB: all functions referred to as abstract have been interpreted to mean pure virtual and both fiure one and figure two were identical thus results have simply been replicated.

Part b:

It violates Stable Dependencies Principle since P2 depends on P1, but P1 has a higher instability as evidenced by its larger I value.

Tali Cohen 329651871
Tamar Harizy 209927128

Question 2 Part A:

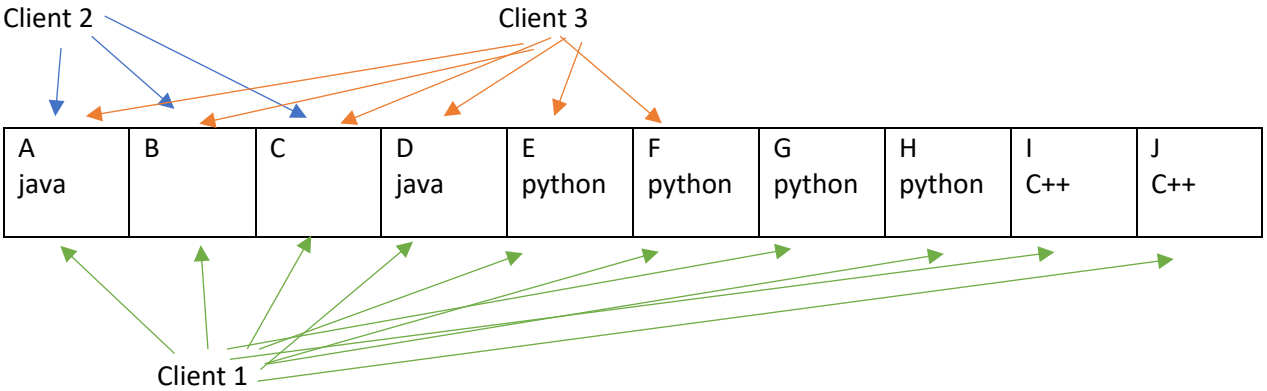

Common Reuse Principal (CRP) and Reuse/Release Equivalence Principle(REP)

(client shouldn't depend on classes it doesn't use and smallest unit as you cannot update just part of a package)

Therefore according to above at the very least we should have three packages

Package 1: A, B,C
Package 2: D,E,F
Package 3: G,H,I,J

One could split GH and IJ into separate packages as they are alternatives and the client can choose which they wish to use and not have classes they don't rely on in the packages they use (holding to CRP)

IE:

Package 1: A, B,C
Package 2: D,E,F
Package 3: G,H
Package 4: I,J

but leaving them together adheres to the Common Closure Principle (CCR) (classes affected by the same changes should be grouped together).

Part B: (assuming 4 packages)

Arbitrary dependencies:

P1 depends on P2
P2 depends on P3
P2 depends on P4
P3 depends on P4
If A and B are changed only Package 1 is affected as both A and B are contained by package 1, since no other package depends on package one the only action needed would be to redistribute Package 1.