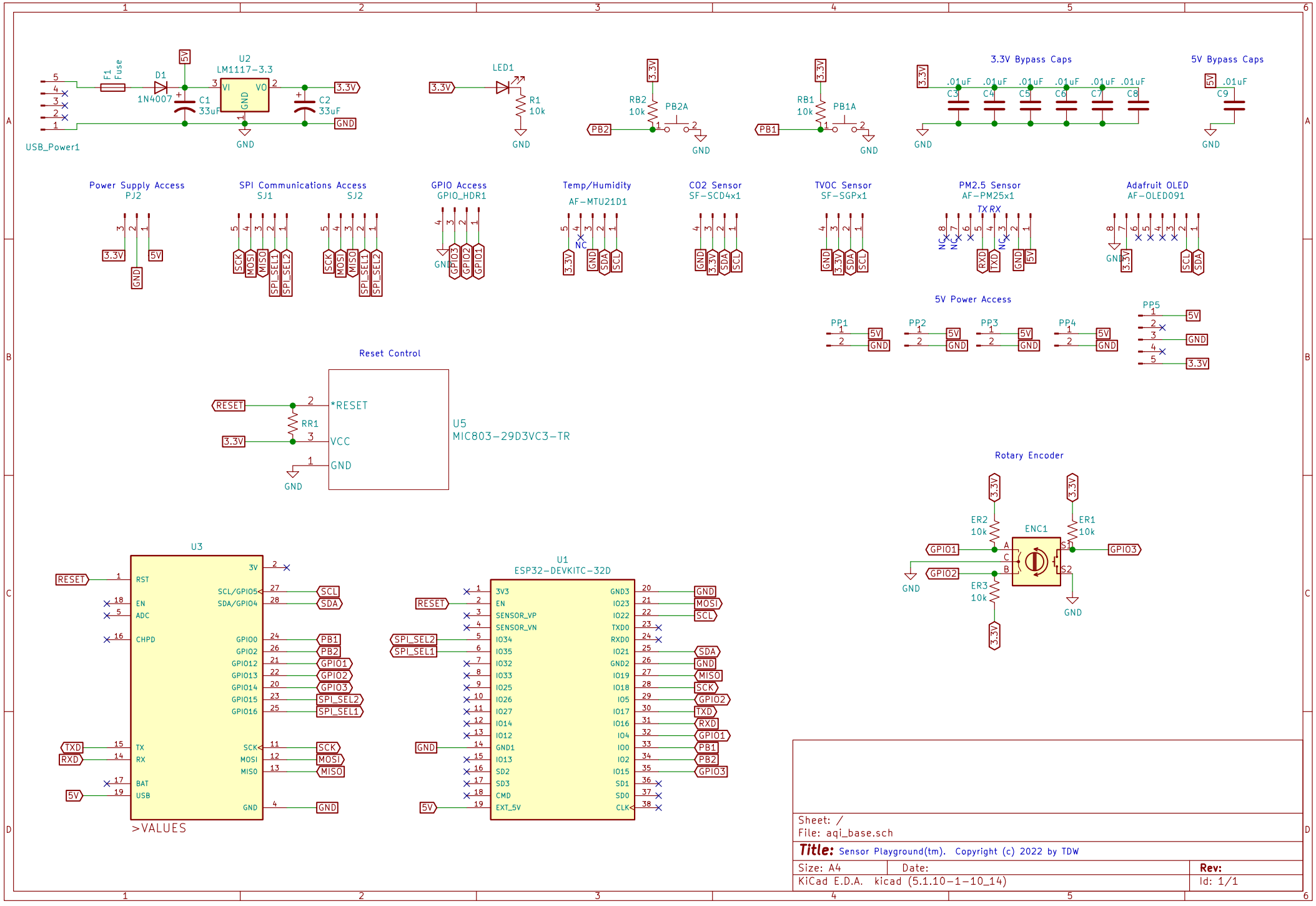
USB_Power1
F1 Fuse
D1 1N4007
C1 33uF
U2 LM1117-3.3
VI VO GND
C2 33uF
3.3V
5V
GND
LED1
R1 10k
RB2 10k
PB2A
PB2
RB1 10k
PB1A
PB1
3.3V Bypass Caps
C3 .01uF
C4 .01uF
C5 .01uF
C6 .01uF
C7 .01uF
C8 .01uF
5V Bypass Caps
C9 .01uF
Power Supply Access
PJ2
SPI Communications Access
SJ1
SJ2
SCK MOSI MISO SPI_SEL1 SPI_SEL2
GPIO Access
GPIO_HDR1
GPIO3 GPIO2 GPIO1
Temp/Humidity
AF-MTU21D1
NC SDA SCL
CO2 Sensor
SF-SCD4x1
TVOC Sensor
SF-SGPx1
PM2.5 Sensor
AF-PM25x1
TX RX
RXD TXD
Adafruit OLED
AF-OLED091
5V Power Access
PP1
PP2
PP3
PP4
PP5
Reset Control
RESET
RR1
*RESET
VCC
U5
MIC803-29D3VC3-TR
Rotary Encoder
ER2 10k
ER1 10k
ER3 10k
ENC1
GPIO1
GPIO2
GPIO3
U3
RST
EN
ADC
CHPD
TX
RX
BAT
USB
3V
SCL/GPIO5
SDA/GPIO4
GPIO0
GPIO12
GPIO13
GPIO14
GPIO15
GPIO16
>VALUES
U1
ESP32-DEVKITC-32D
3V3
EN
SENSOR_VP
SENSOR_VN
IO34
IO35
IO32
IO33
IO25
IO26
IO27
IO14
IO12
GND1
IO13
SD2
SD3
CMD
EXT_5V
GND3
IO23
IO22
TXD0
RXD0
IO21
GND2
IO19
IO18
IO5
IO17
IO16
IO4
IO0
IO2
IO15
SD1
SD0
CLK
Sheet: /
File: aqi_base.sch
Title: Sensor Playground(tm). Copyright (c) 2022 by TDW
Size: A4
Date:
Rev:
KiCad E.D.A. kicad (5.1.10-1-10_14)
Id: 1/1