This section of the schematic is designed to replicate the student board that the go-kart is currently driven by.

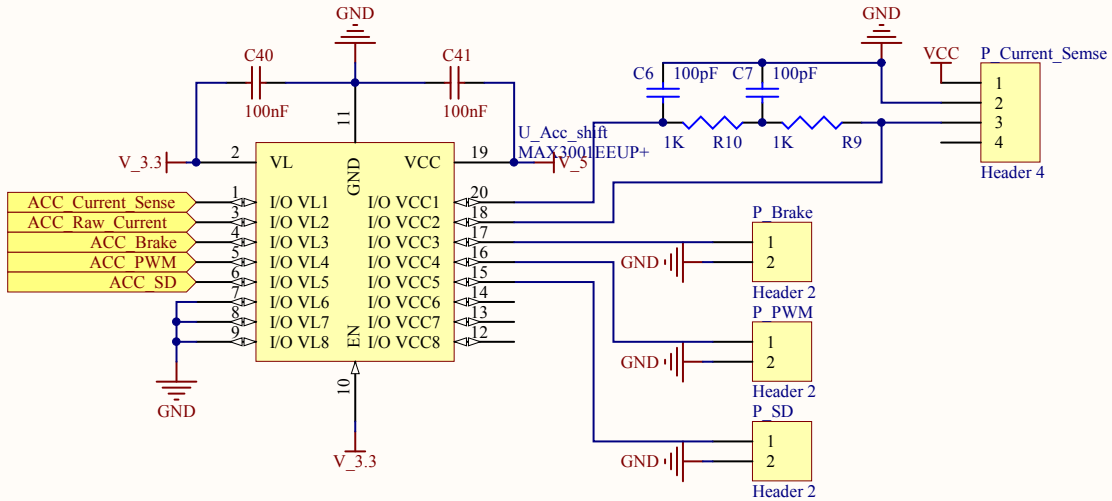

This logic needs checking, we need to know that the vcc here is only used for the pot

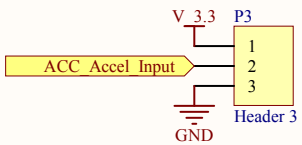

Title		
Size: A	Number	Revision
Date: 29/05/2011		Sheet of
File: G:\workspace\..\accelerator.SchDoc		Drawn By:

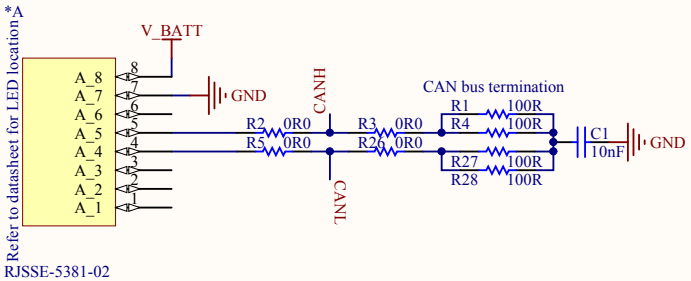

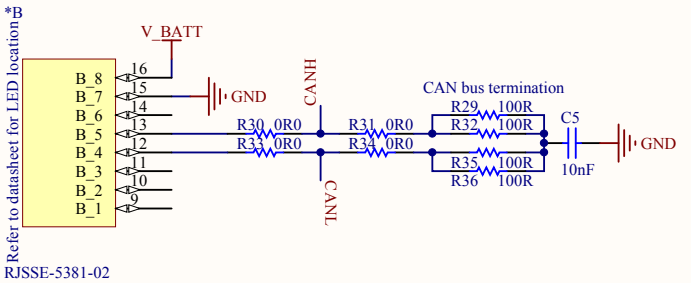

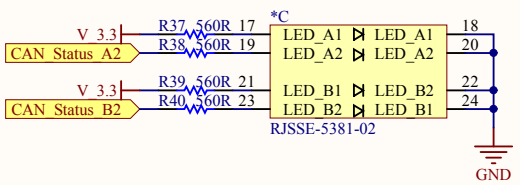

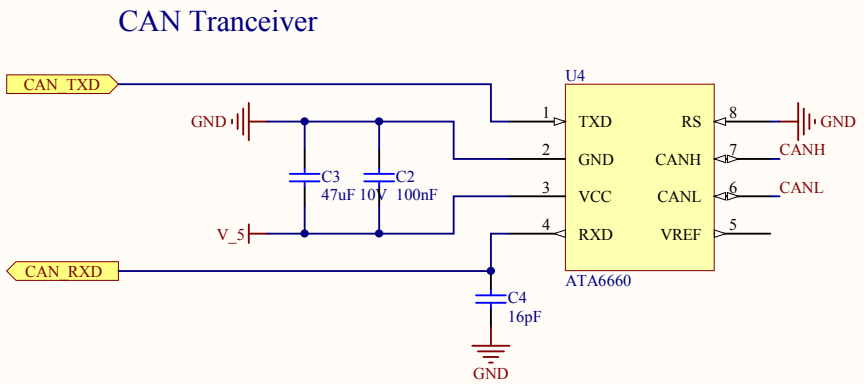

Title **CAN Bus**			*ENEL429 Group N* *ECE Department* *University of Canterbury* *Christchurch 8041* *New Zealand*
Drawn by:		Revision: 1	
Date: 29/05/2011	Time: 4:16:21 p.m.	Sheet of	
File: G:\workspace\mariokart\Altium\Main Board\CAN.SchDoc			

UNIVERSITY OF CANTERBURY
Te Whare Wānanga o Waitaha
CHRISTCHURCH NEW ZEALAND

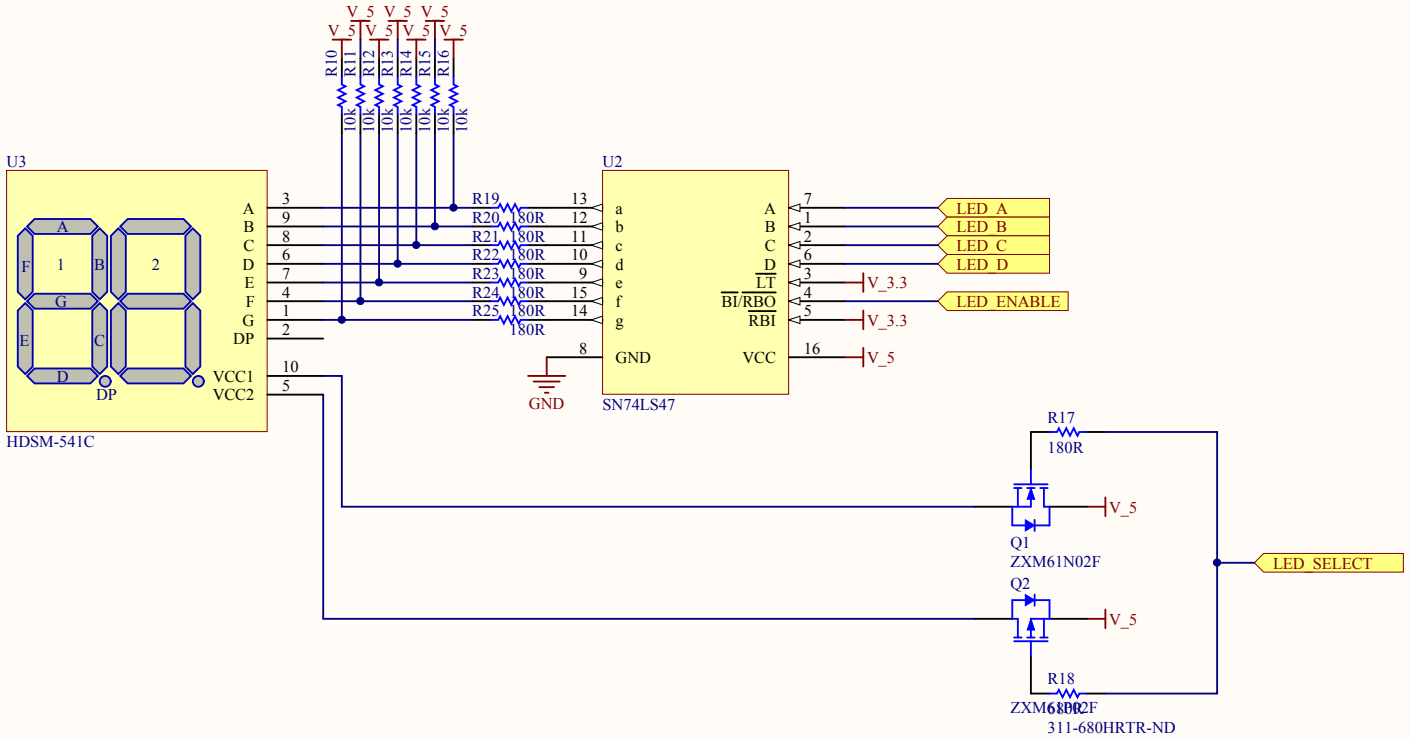

Title		ENEL429 Group N ECE Department University of Canterbury Christchurch 8041 New Zealand	UC UNIVERSITY OF CANTERBURY
Drawn by:	Revision: 1		
Date: 29/05/2011 Time: 4:16:21 p.m.	Sheet of		
File: G:\workspace\mariokart\Altium\Main Board\LED_Display.SchDoc			

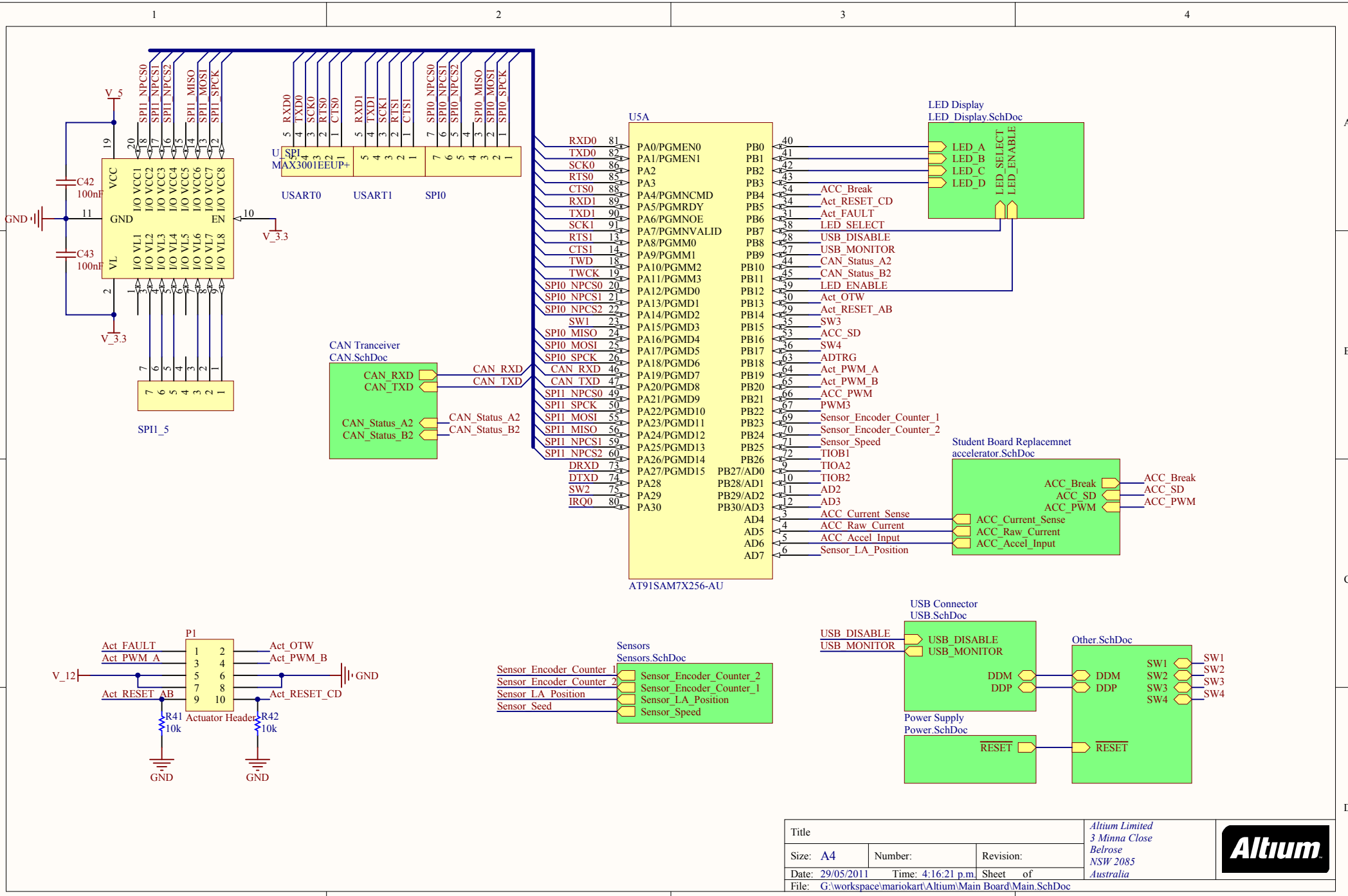
U5A
AT91SAM7X256-AU
U_SPI
MAX3001EEUP+
USART0
USART1
SPI0
SPI1_5
CAN Tranceiver
CAN.SchDoc
LED Display
LED_Display.SchDoc
Student Board Replacemnet
accelerator.SchDoc
USB Connector
USB.SchDoc
Other.SchDoc
Sensors
Sensors.SchDoc
Power Supply
Power.SchDoc
P1
Actuator Header
Title
Size: A4
Number:
Revision:
Date: 29/05/2011
Time: 4:16:21 p.m.
Sheet of
File: G:\workspace\mariokart\Altium\Main Board\Main.SchDoc
Altium Limited
3 Minna Close
Belrose
NSW 2085
Australia

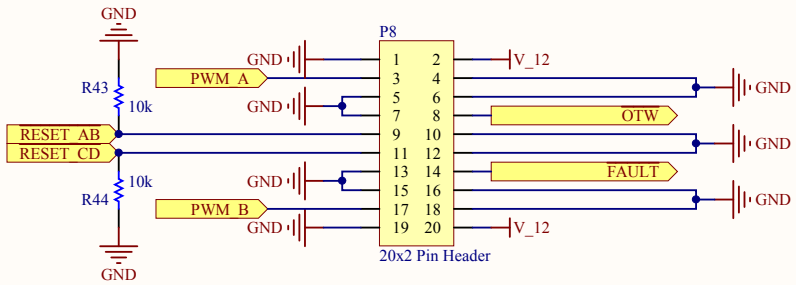

Title		*ENEL429 Group N* *ECE Department* *University of Canterbury* *Christchurch 8041* *New Zealand*	UC UNIVERSITY OF CANTERBURY Te Whare Wānanga o Waitaha CHRISTCHURCH NEW ZEALAND
Drawn by:	Revision: 1		
Date: 29/05/2011 Time: 4:16:21 p.m.	Sheet of		
File: G:\workspace\mariokart\Altium\Main Board\Motor_Board_Connector.SchDoc			

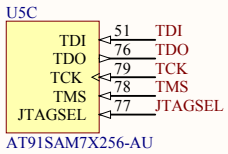

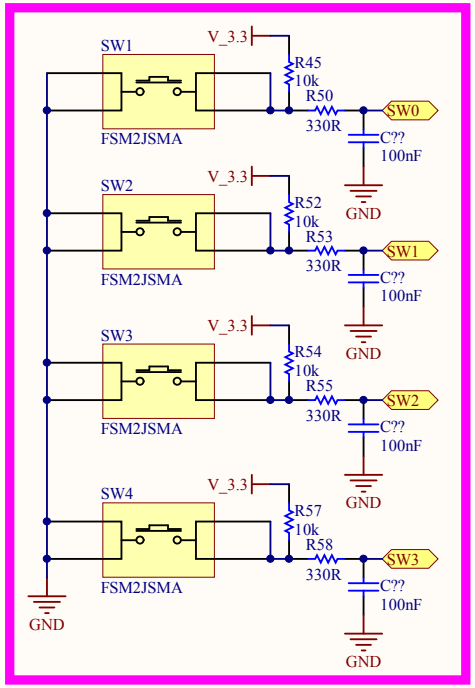

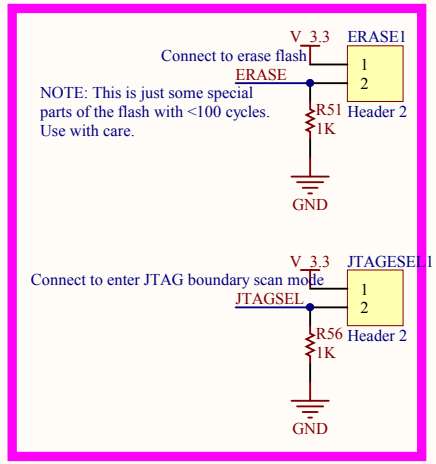

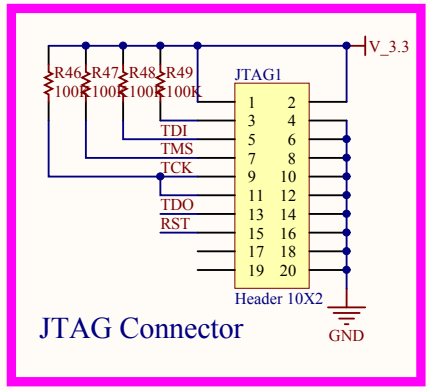

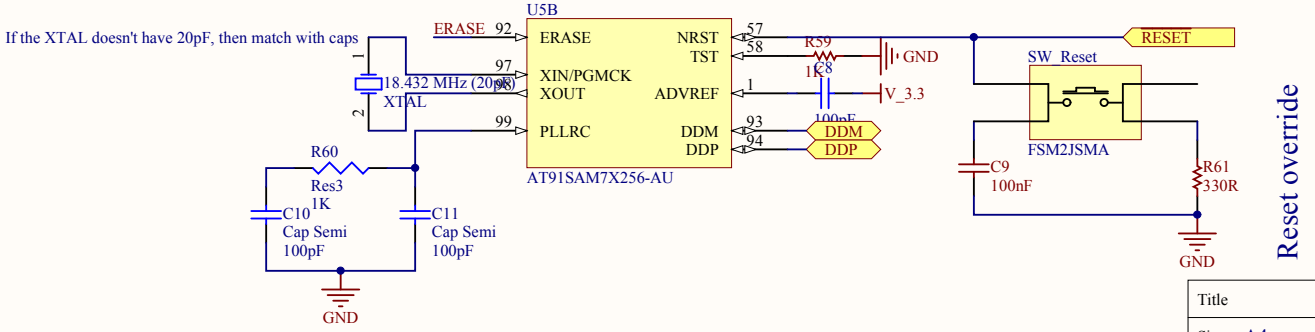

Title			Altium Limited 3 Minna Close Belrose NSW 2085 Australia
Size: A4	Number:	Revision:	
Date: 29/05/2011	Time: 4:16:21 p.m.	Sheet of	
File: G:\workspace\mariokart\Altium\Main Board\Other.SchDoc			

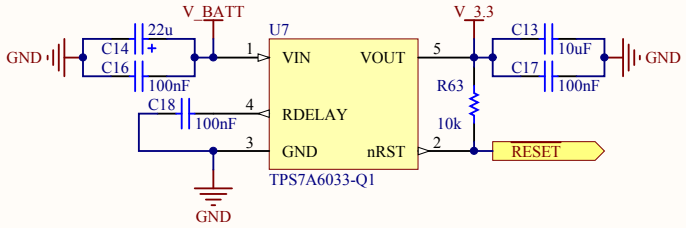

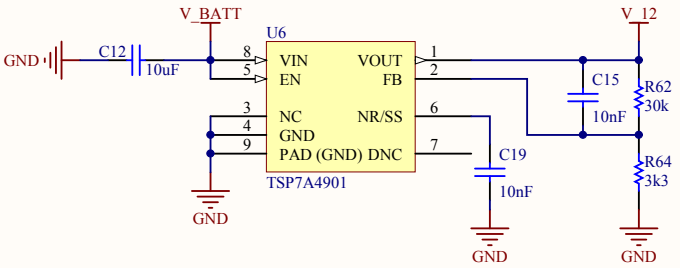

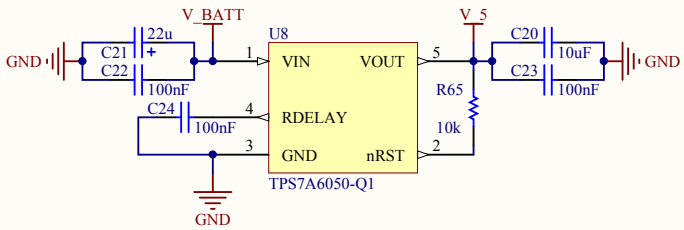

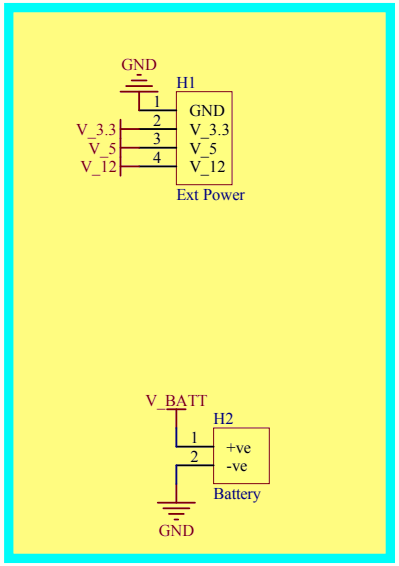

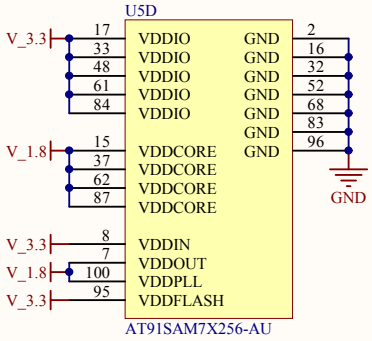

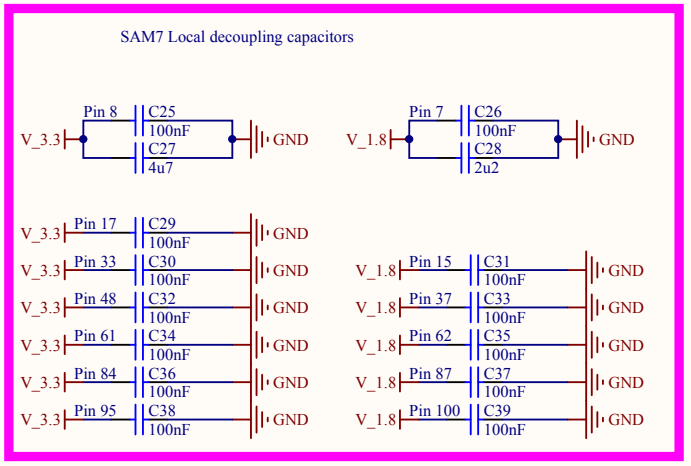

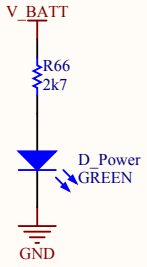

Title			*Altium Limited* *3 Minna Close* *Belrose* *NSW 2085* *Australia*
Size: A4	Number:	Revision:	
Date: 29/05/2011	Time: 4:16:21 p.m.	Sheet of	
File: G:\workspace\mariokart\Altium\Main Board\Power.SchDoc			

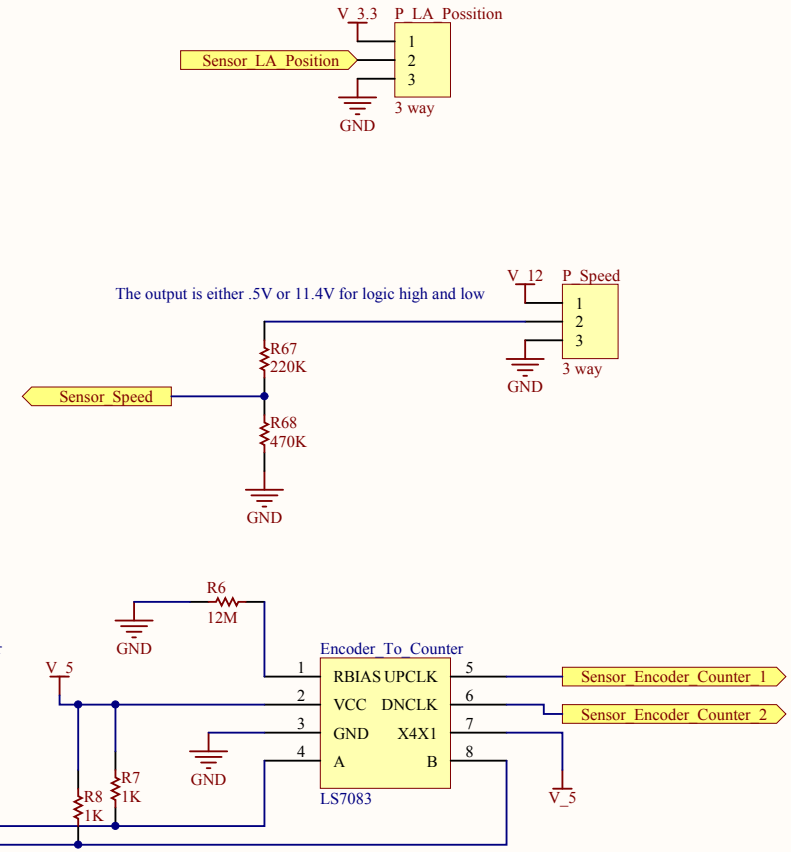

Title		
Size: A4	Number	Revision
Date: 29/05/2011		Sheet of
File: G:\workspace\..\Sensors.SchDoc		Drawn By:

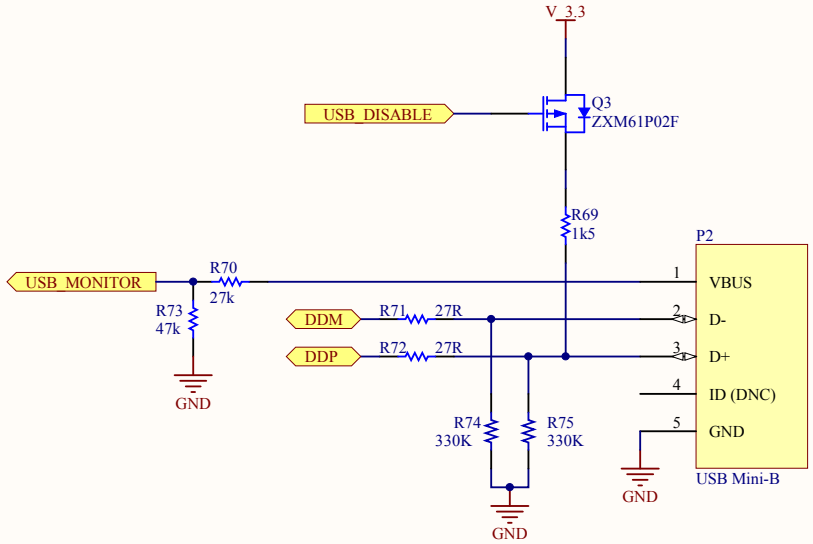

Title		*ENEL429 Group N* *ECE Department* *University of Canterbury* *Christchurch 8041* *New Zealand*	UC UNIVERSITY OF CANTERBURY Te Whare Wānanga o Waitaha CHRISTCHURCH NEW ZEALAND
Drawn by:	Revision: 1		
Date: 29/05/2011 Time: 4:16:22 p.m.	Sheet of		
File: G:\workspace\mariokart\Altium\Main Board\USB.SchDoc			

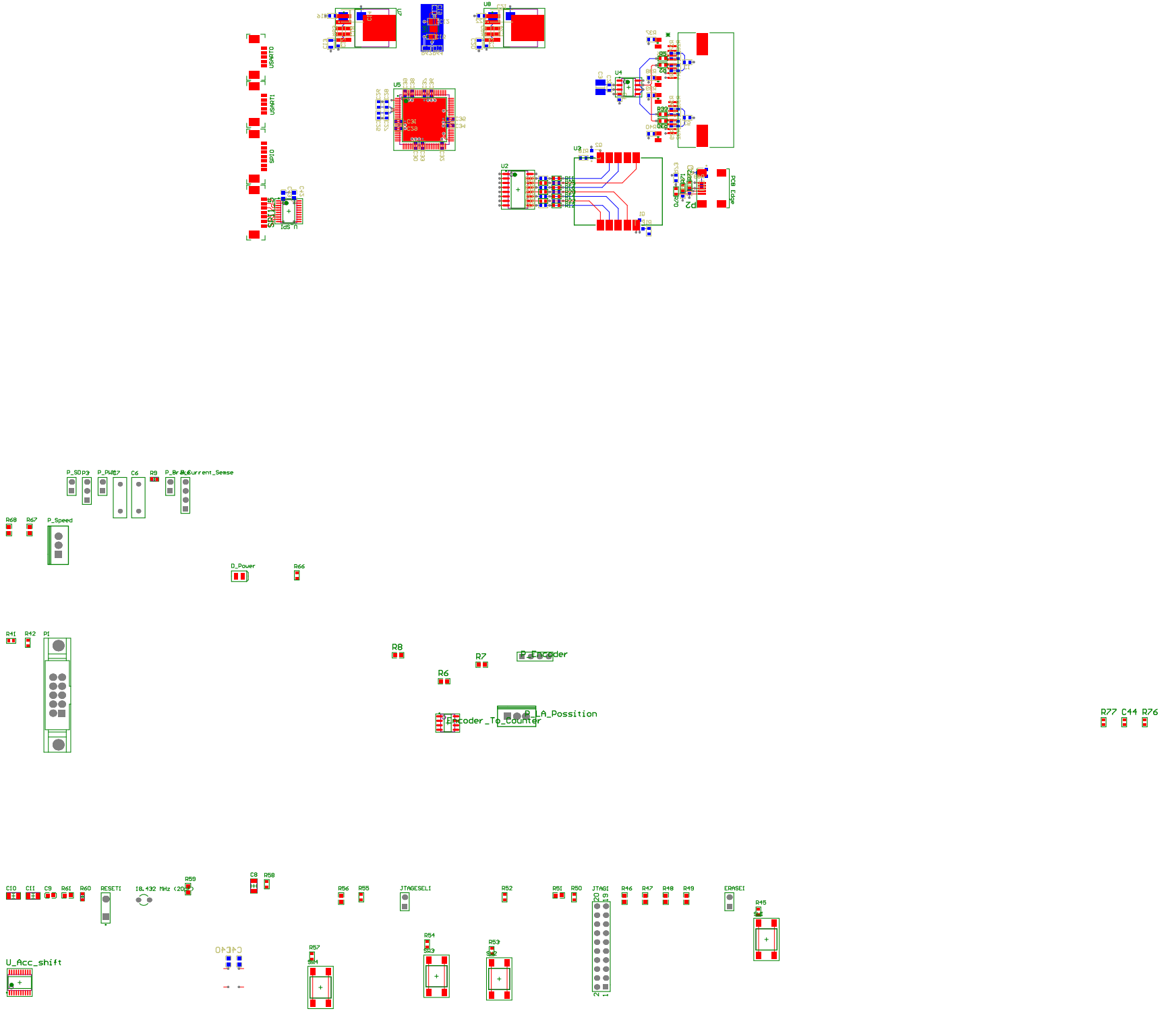

USART0
USART1
SPI0
U8
U5
U4
U3
U2
PCB Edge
P_SD
P_PWM
C6
R9
P_Brake
Current_Sense
R68
R67
P_Speed
D_Power
R66
R41
R42
P1
R8
R7
P_Encoder
R6
P_Encoder_To_Counter
R_A_Possition
R77
C44
R76
C10
C11
C9
R61
R60
RESET1
18.432 MHz (20
R59
C8
R58
R56
R55
JTAGESEL1
R52
R51
R50
JTAG1
R46
R47
R48
R49
ERASE1
R45
U_Acc_shift
R57
R54
R53

Comment	Description	Designator	Footprint	LibRef	Quantity
RJSSE-5381-02	RJ45 SMT Right Angle x2		RJSSE-5381-02	RJSSE-5381-02	1
XTAL	Crystal Oscillator	18.432 MHz (20pF)	BCY-W2/D3.1	XTAL	1
10nF	CAP CER 10000PF 100V X7R 0603	C1, C5, C15, C19	0603	CP_10nF 0603	4
100nF	CAP CER .10UF 50V X5R 0603	C2, C16, C17, C18, C22, C23, C24, C25, C26, C29, C30, C31, C32, C33, C34, C35, C36, C37, C38, C39, C??	0603	CP_100nF 0603	24
47uF 10V	CAP CER 47uF 10V X5R 1210	C3	1210	CP_47uF 10V 1210	1
16pF	CAP CER 16PF 100V 5% C0G 0603	C4	0603	CP_16pF_100V_0603	1
Cap	Capacitor	C6, C7	RAD-0.3	Cap	2
Cap Semi	Capacitor (Semiconductor SIM Model)	C8, C10, C11	CAPC3216L	Cap Semi	3
100nF	0603 Capacitor	C9, C40, C41, C42, C43	CC0603	100nF_CC0603	5
10uF	CAP 10uF 10% 10V X5R 0805	C12, C13, C20	0805	CP_10uF 0805	3
CP_TANT_22uF	CAP TANT 22UF 35V 10% SMD	C14, C21	6032	CP_TANT_22uF_35V	2
4u7	CAP CER 4.7UF 10V X5R 0603	C27	0603	CP_4u7 0603	1
2u2	CAP CER 2.2UF 10V 10% X5R 0603	C28	0603	CP_2u2F_10V_0603	1
LED Green	Green LED 0805	D_Power	DIODE_0805	DL_LED Green 0805	1
LS7083		Encoder_To_Counter	SOIC127P600-8L	LS7083	1
Header 2	Header, 2-Pin	ERASE1, JTAGESEL1, P_Brake, P_PWM, P_SD	HDR1X2	Header 2	5
Ext Power	5.08mm Pluggable Terminal Header	H1		JP_ENEL429 Header 4	1
Battery	5.08mm Pluggable Terminal Header	H2		JP_ENEL429 Header 2	1
Header 10X2	Header, 10-Pin, Dual row	JTAG1	HDR2X10	Header 10X2	1
Actuator Header	blox header 5x2 with wing locks	P1	BOXHDR_LOCKING_2X5	BOXHDR_LOCKING_5x2	1
USB Mini-B		P2	USB Mini-B	USB Mini B	1
Header 3	Header, 3-Pin	P3	HDR1X3	Header 3	1
Header 4	Header, 4-Pin	P_Current_Sense, P_Encoder	HDR1X4	Header 4	2
3 way	3 way upright Locking & Polarising Header Connector	P_LA_Possition, P_Speed	Con_3way_0.1	Con3ra100ml	2
ZXM61N02F	20V N-channel enhancement mode MOSFET	Q1	SOT-23	TF_ZXM61N02F	1
ZXM61P02F	20V P-channel enhancement mode MOSFET	Q2, Q3	SOT23	TF_ZXM61P02F	2
100R	RES 100 OHM 1/ 10W 1% 0603 SMD	R1, R4, R27, R28, R29, R32, R35, R36	0603	RS_100R 0603	8
12M	0603 Resistor	R6	R0603	12M_R0603	1
1K	0603 Resistor	R7, R8, R51, R56, R59	R0603	1K_R0603	5
Res3	Resistor	R9, R60	RESC1608L	Res3	2
10k	RES 10.0K OHM 1/ 10W 1% 0603 SMD	R10, R11, R12, R13, R14, R15, R16, R41, R42, R45, R52, R54, R57, R63, R65	0603	RS_10k 0603	15
180R	RES 180OHM 1/ 10W 1% 0603 SMD	R17, R19, R20, R21, R22, R23, R24, R25	0603	RS_180R 0603	8
680R	RES 680 OHM 1/ 10W 1% 0603 SMD	R18	0603	RS_680R 0603	1
560R	RES 560 OHM 1/ 10W 1% 0603 SMD	R37, R38, R39, R40	0603	RS_560R 0603	4
100K	0603 Resistor	R46, R47, R48, R49	R0603	100K_R0603	4
330R	RES 330 OHM 1/ 10W 1% 0603 SMD	R50, R53, R55, R58	0603	RS_330R 0603	4
330R	0603 Resistor	R61	R0603	330R_R0603	1
30k	RES 30K OHM 1/ 10W 1% 0603 SMD	R62	0603	RS_30k 0603	1
3k3	RES 3.3K OHM 1/ 10W 5% 0603 SMD	R64	0603	RS_3k3 0603	1
2k7	RES 2.7K OHM 1/ 10W 5% 0603 SMD	R66	0603	RS_2k7 0603	1
220K	0603 Resistor	R67	R0603	220K_R0603	1
470K	0603 Resistor	R68	R0603	470K_R0603	1
1k5	RES 1.5K OHM 1/ 10W 5% 0603 SMD	R69	0603	RS_1k5 0603	1
27k	RES 27K OHM 1/ 10W 1% 0603 SMD	R70	0603	RS_27k 0603	1
27R	RES 27 OHM 1/ 10W 1% 0603 SMD	R71, R72	0603	RS_27R 0603	2
47k	RES 47.0K OHM 1/ 10W 1% 0603 SMD	R73	0603	RS_47k 0603	1
330K		R74, R75	0603 Resistor	RS_330K 0603	2
53261-0771	7-pin PicoBlade Right-angle Header	SPI0, SPI1_5	53261-0771	53261-0771	2
FSM2JSMA	DPST SMD Switch	SW1, SW2, SW3, SW4, SW_Reset	FSM2JSMA	SW_FSM2JSMA	5
SN74LS47	SN74LS47	U2	SOP127P780X200-16N	SN74LS47	1
HDSM-541C	2 character 7 segment display	U3	HDSM-541C	HDSM-541C	1
ATA6660		U4	SOIC127P600X150-8N	ATA6660	1
AT91SAM7X256-AU	Smart ARM Microcontroller, ARM7TDMI 32-Bit RISC CPU, 256KB Flash and 64KB SRAM, 100-Pin LQFP, Industrial, Pb-Free	U5	LQFP100_N	AT91SAM7X256-AU	1
TSP7A4901		U6	TSOP65P490X110-8N	TSP7A4901	1
TPS7A6033-Q1		U7	TOT70P1524X483-6N	TPS7A6033-Q1	1
TPS7A6050-Q1		U8	TOT70P1524X483-6N	TPS7A6050-Q1	1
53261-0571	5-pin PicoBlade Right-angle Header	USART0, USART1	53261-0571	53261-0571	2
MAX3001EEUP+		U_Acc_shift, U_SPI	TSOP65P640X110-2	MAX3001EEUP+	2