PMOLED Interface

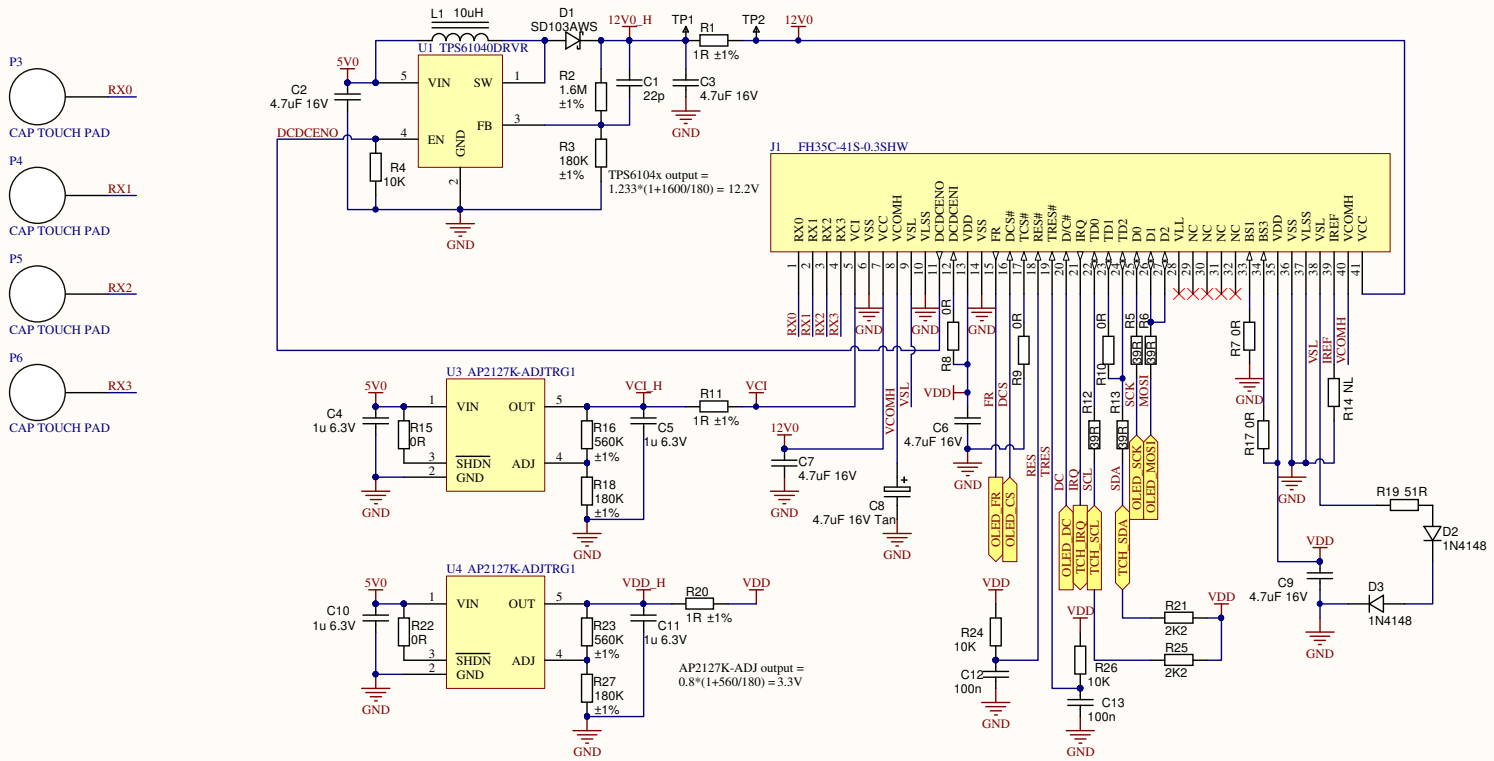

MCU Module

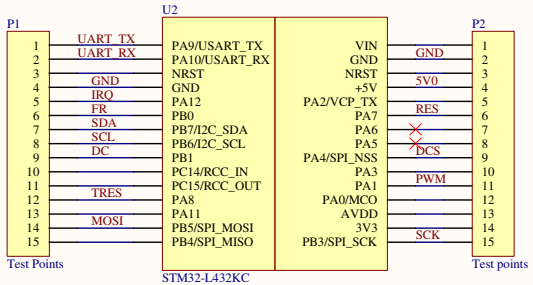

Buzzer

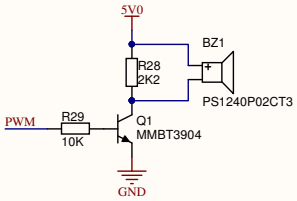

M1 M2 M3 M4
FIDU FIDU FIDU FIDU

Title *			
Size: A3	Number:*	Revision:*	
Date: 12/30/2020	Time: 5:10:24 PM	Sheet* of *	
File: D:\projects\SSL_OEL_SAS1_DemoKit\Altium\TDDI_Module.SchDoc			

Altium