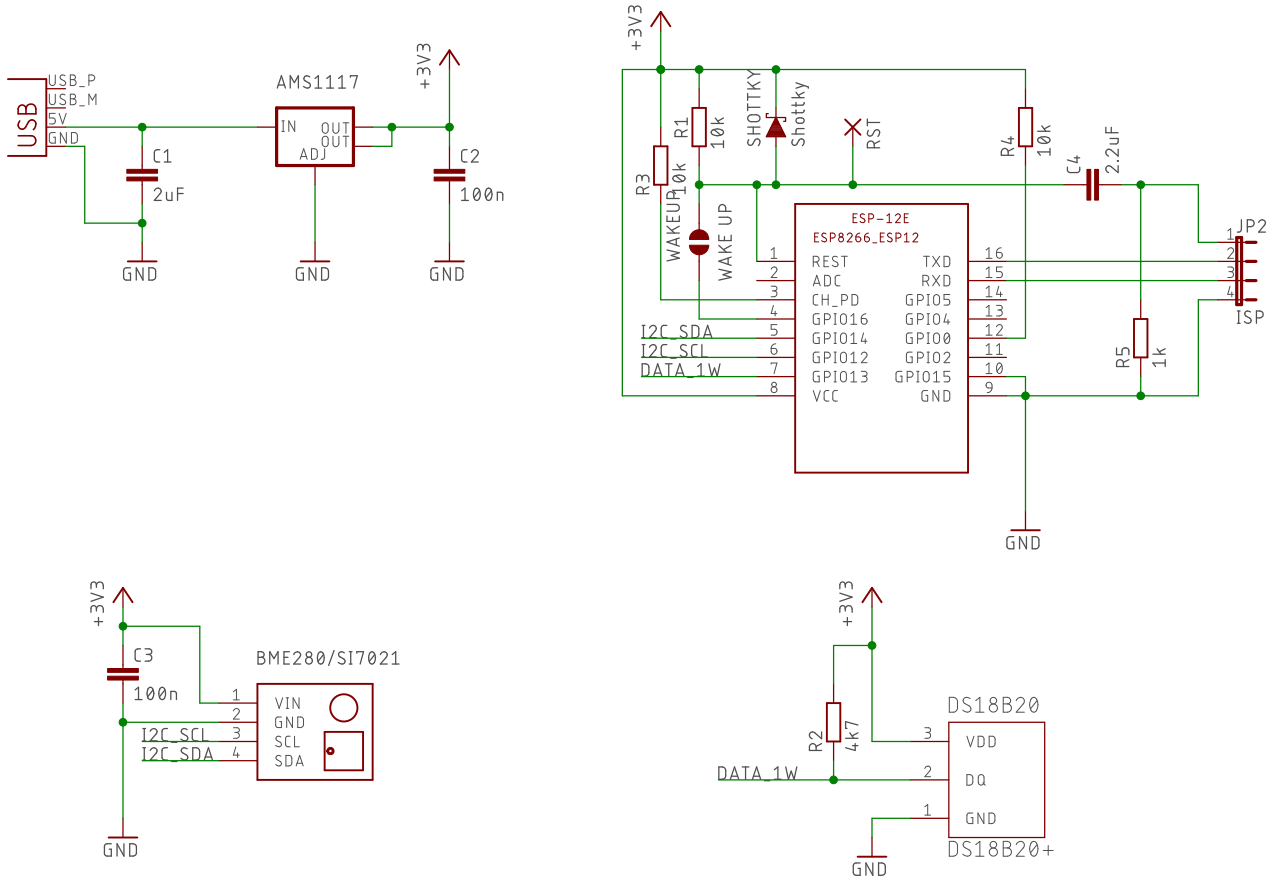

TITLE: SensorNodeUsb	
Document Number:	REV:
Date: 01.05.19 08:28	Sheet: 1/1