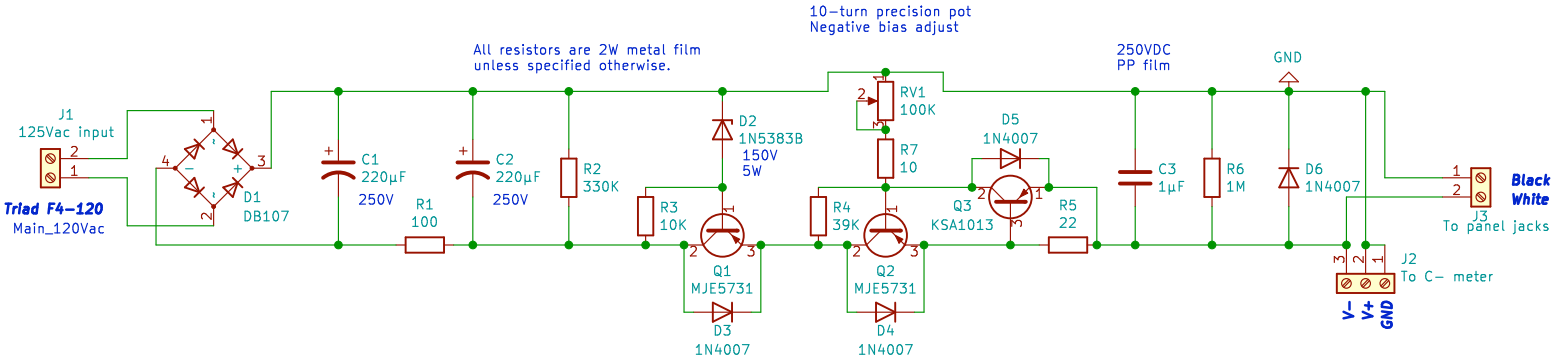

Copyright (c) 2017-2022 Kevin Ward and Jason R. Thorpe. See LICENSE.

Sheet: /
File: bias-supply.sch

Title: KWard Bench PSU - Bias supply

Size: A	Date: 2022-01-02	Rev: 1.0
KiCad E.D.A. kicad (5.1.12-1-10_14)		Id: 1/1