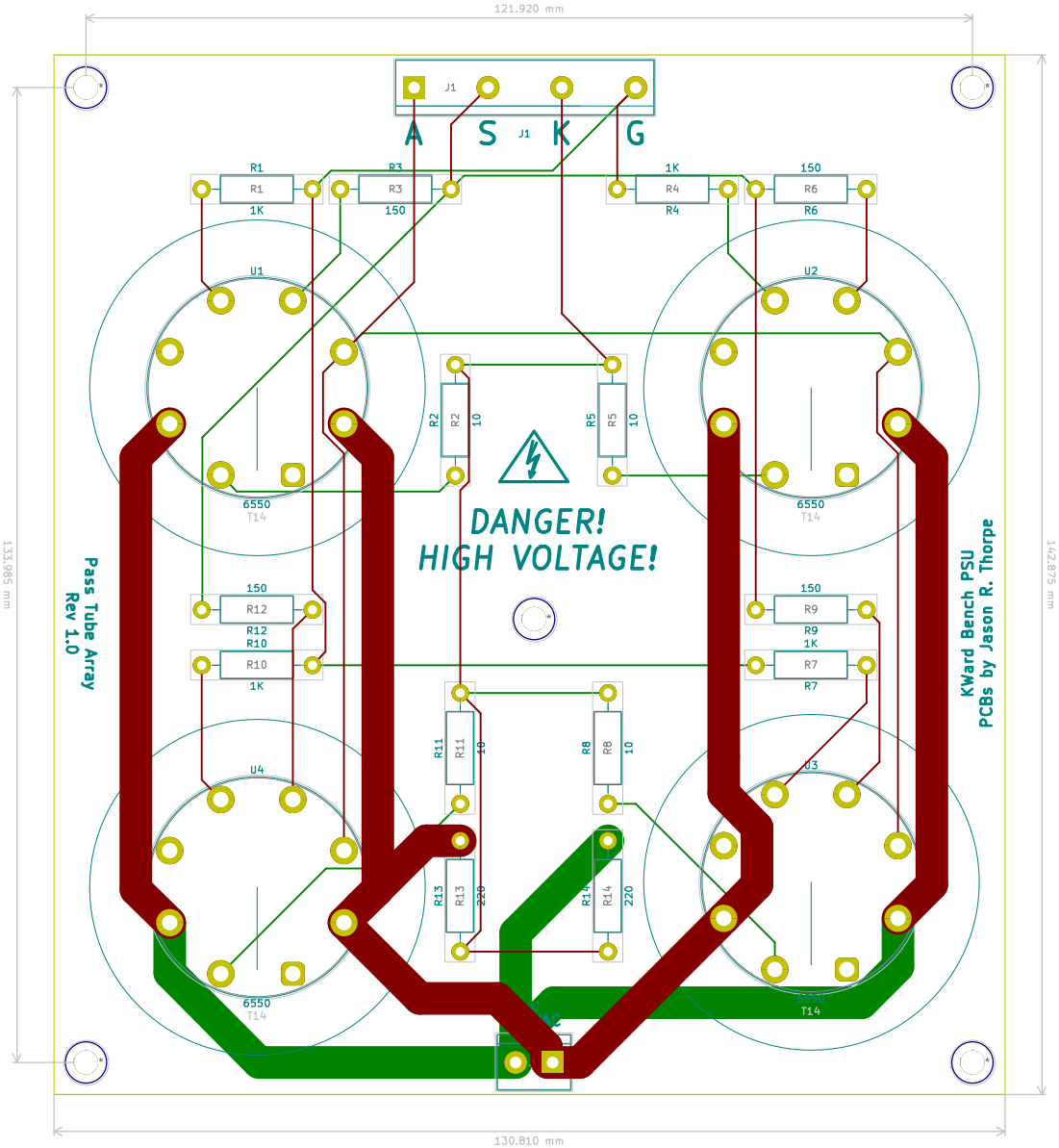

Copyright (c) 2021 Jason R. Thorpe. See LICENSE.

Sheet:
File: pass-tube-array.kicad_pcb

Title: KWard Bench PSU – Pass tube array

Size: A	Date: 2022-01-04	Rev: 1.0
KiCad E.D.A. kicad (5.1.12-1-10_14)		Id: 1/1