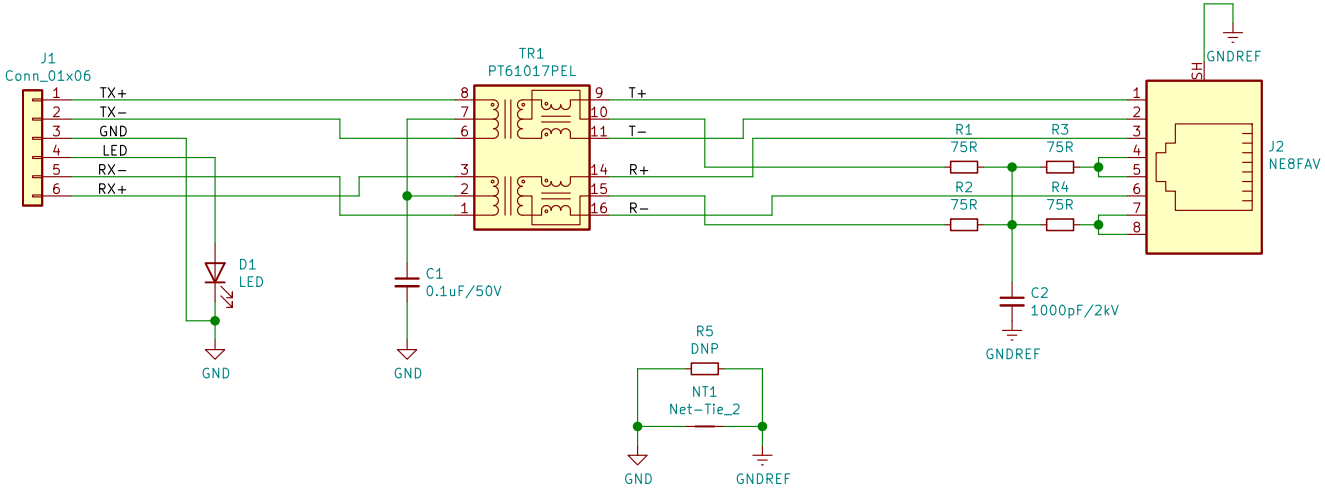

Chassis ground :
by default chassis ground and system ground are tied together.
If necessary, you can cut NT1 open and populate a resistor or capacitor on the R5 footprint

Tom Magnier

Sheet: /
File: Teensy4.1_Ethercon_adapter.sch

Title: Teensy 4.1 Ethercon adapter

Size: A4	Date: 2021−03−17	**Rev: 1.1**
KiCad E.D.A. kicad 5.1.9		Id: 1/1