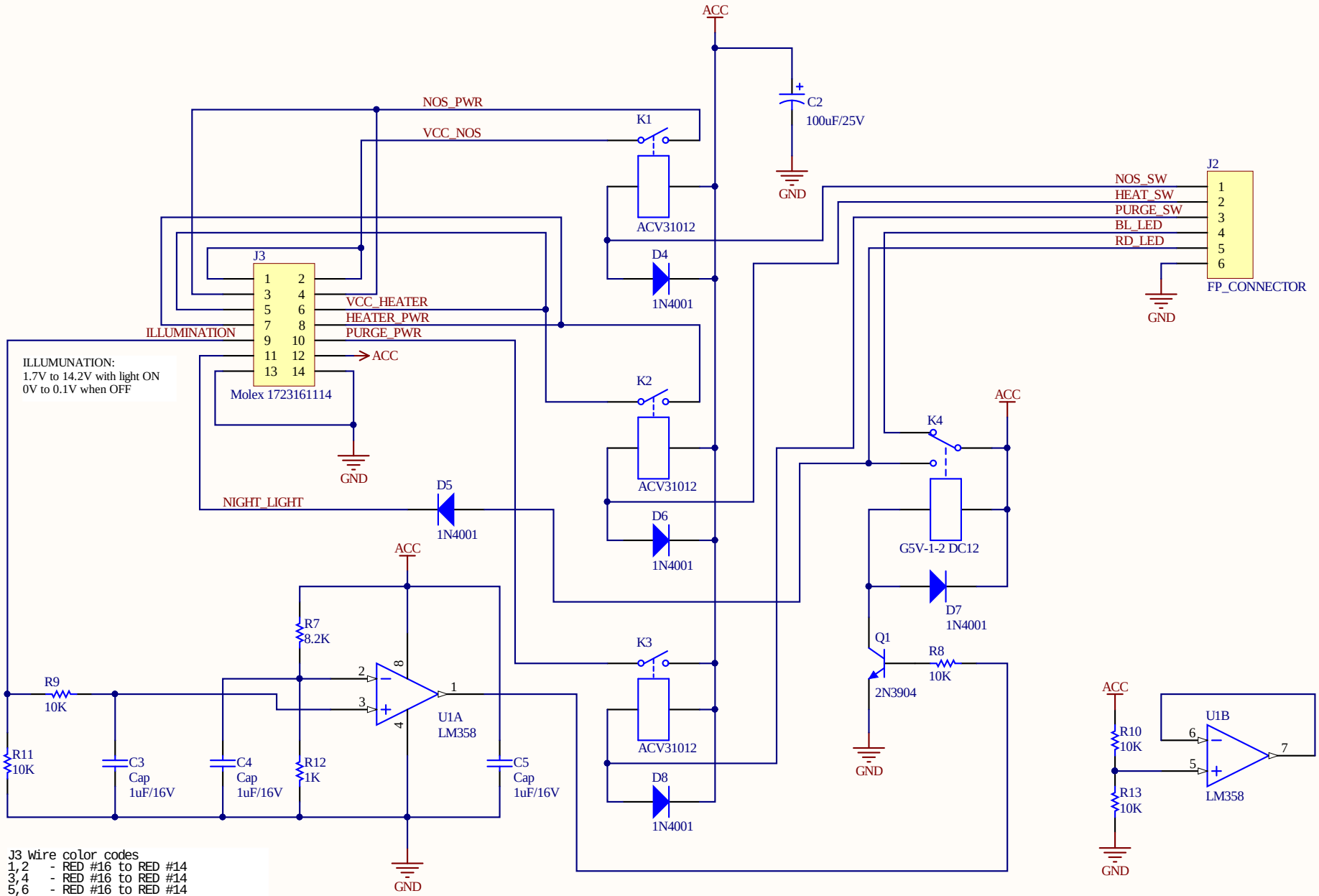

J3 Wire color codes
1,2 - RED #16 to RED #14
3,4 - RED #16 to RED #14
5,6 - RED #16 to RED #14
7,8 - RED #16 to BLUE #12
9 - YELLOW #18
10 - RED #16
11 - BLUE #18
12 - GREEN #16
13,14 - BLACK # 16

Title	Nitrous Controller - Control unit	
Size A	Number 1.0	Revision
Date: 4/14/2023		Sheet of
File: C:\Users\..\Main_Board.SchDoc		Drawn By: Stephane Gilbert