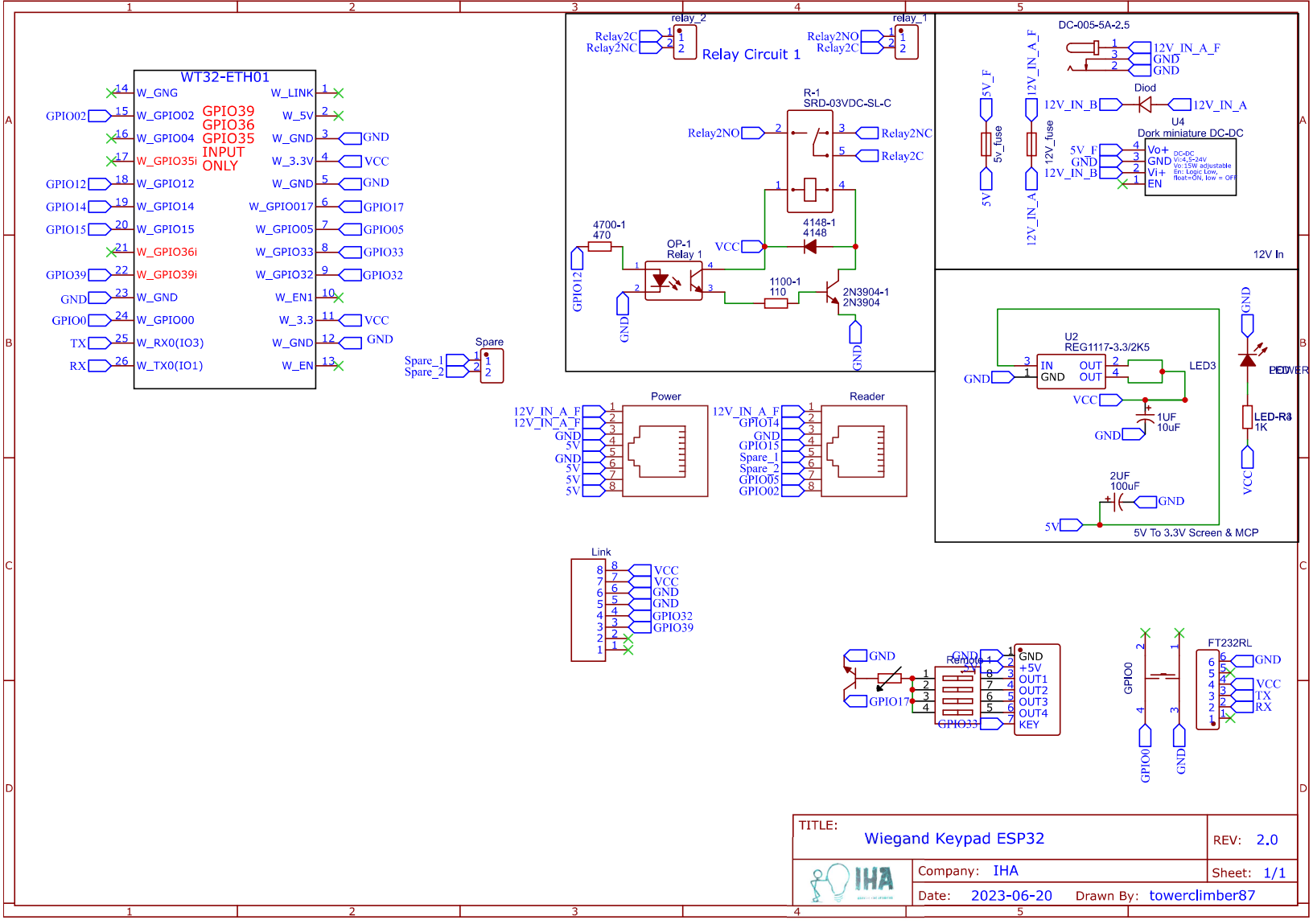

TITLE: Wiegand Keypad ESP32		REV: 2.0
IHA	Company: IHA	Sheet: 1/1
	Date: 2023-06-20 Drawn By: towerclimber87	