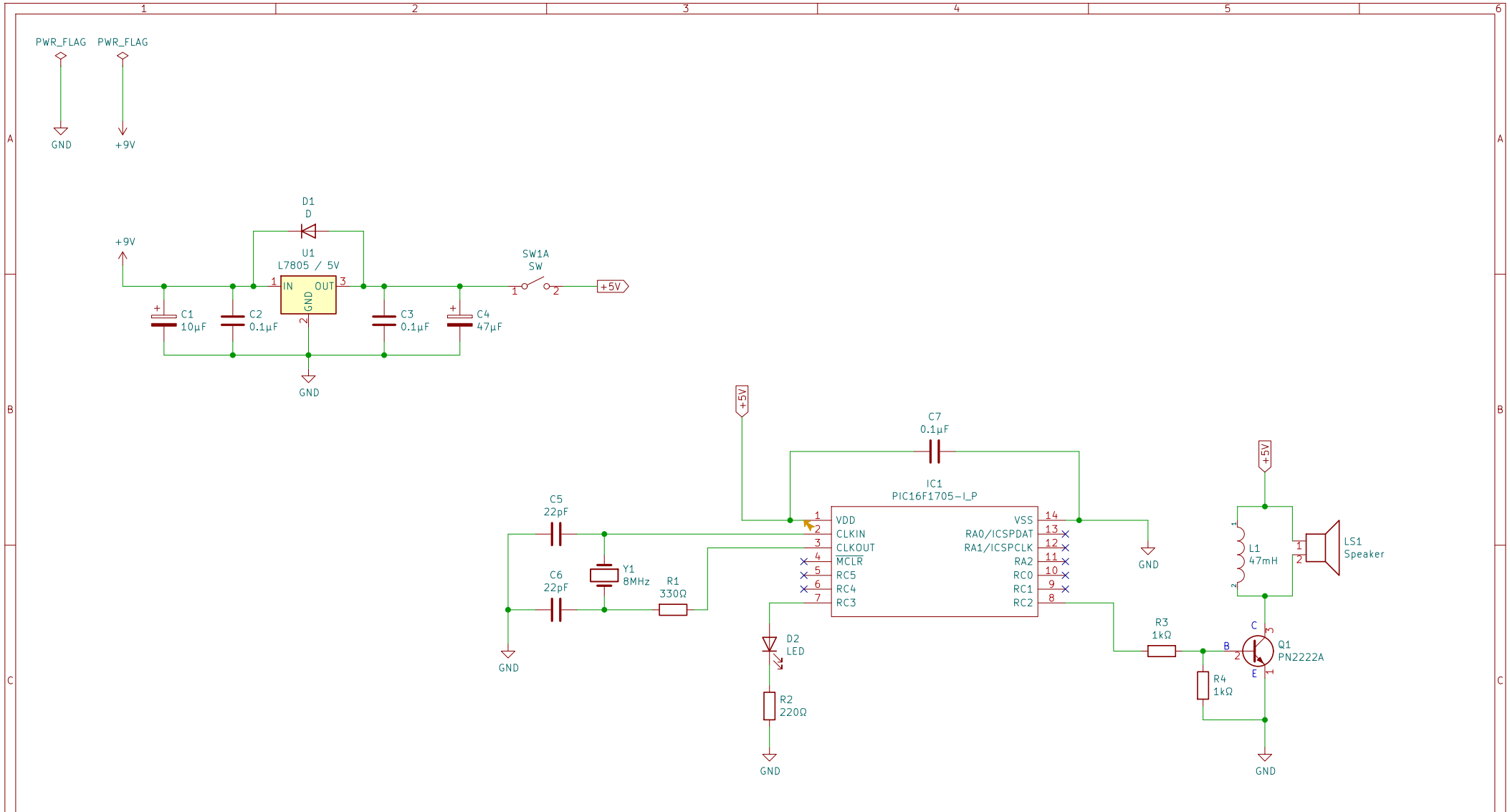

Object / ts5h

Sheet: /

File: Device-0002 Click-Buzzer.kicad_sch

Title: Device-0002 / Click-Buzzer

Size: A4	Date: 2021-03-10	**Rev: 0.95**
KiCad E.D.A. kicad (6.0.4)		Id: 1/1