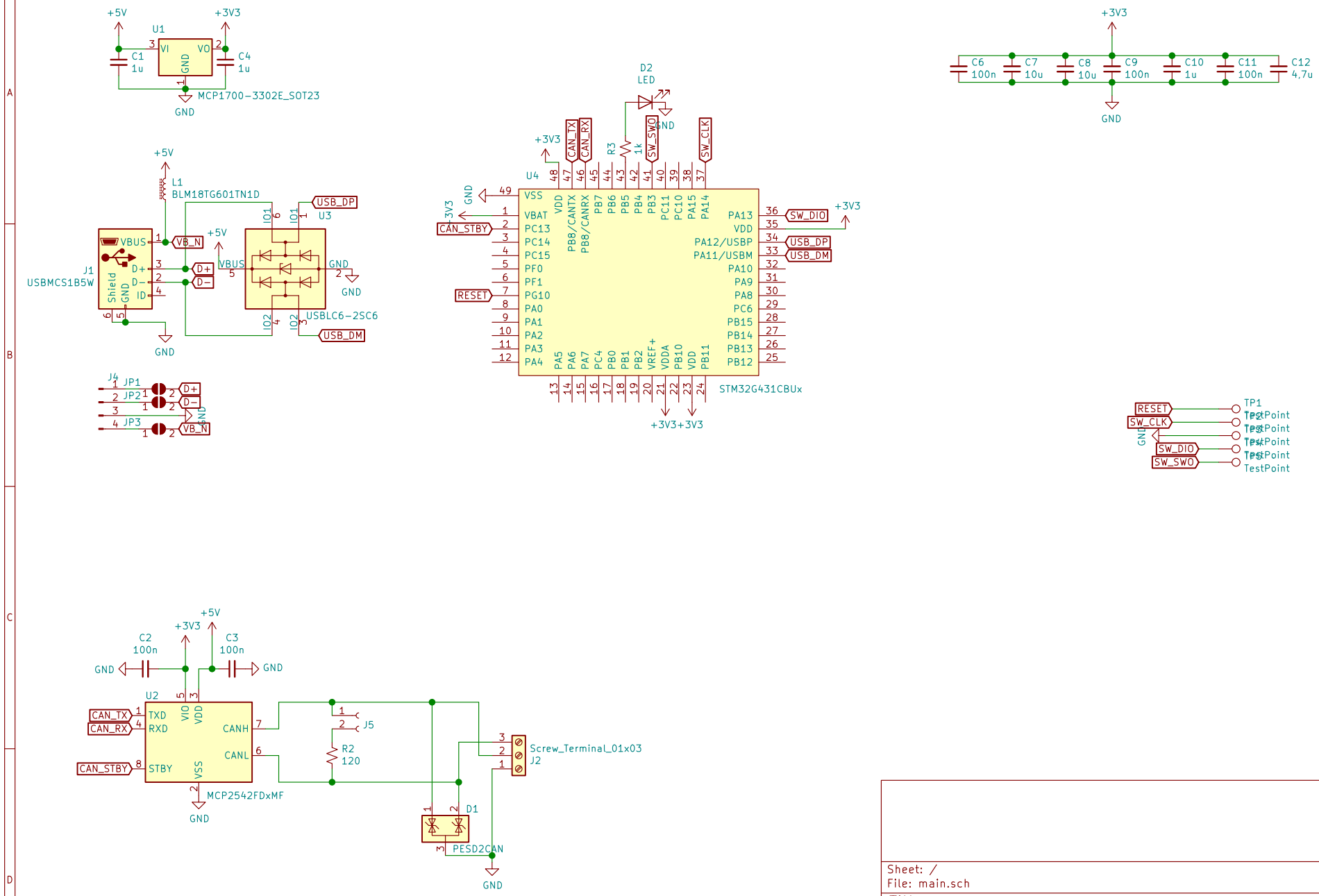

Sheet: /
File: main.sch

Title:

Size: A4	Date:	**Rev:**
KiCad E.D.A. kicad (5.1.4)-1		Id: 1/1