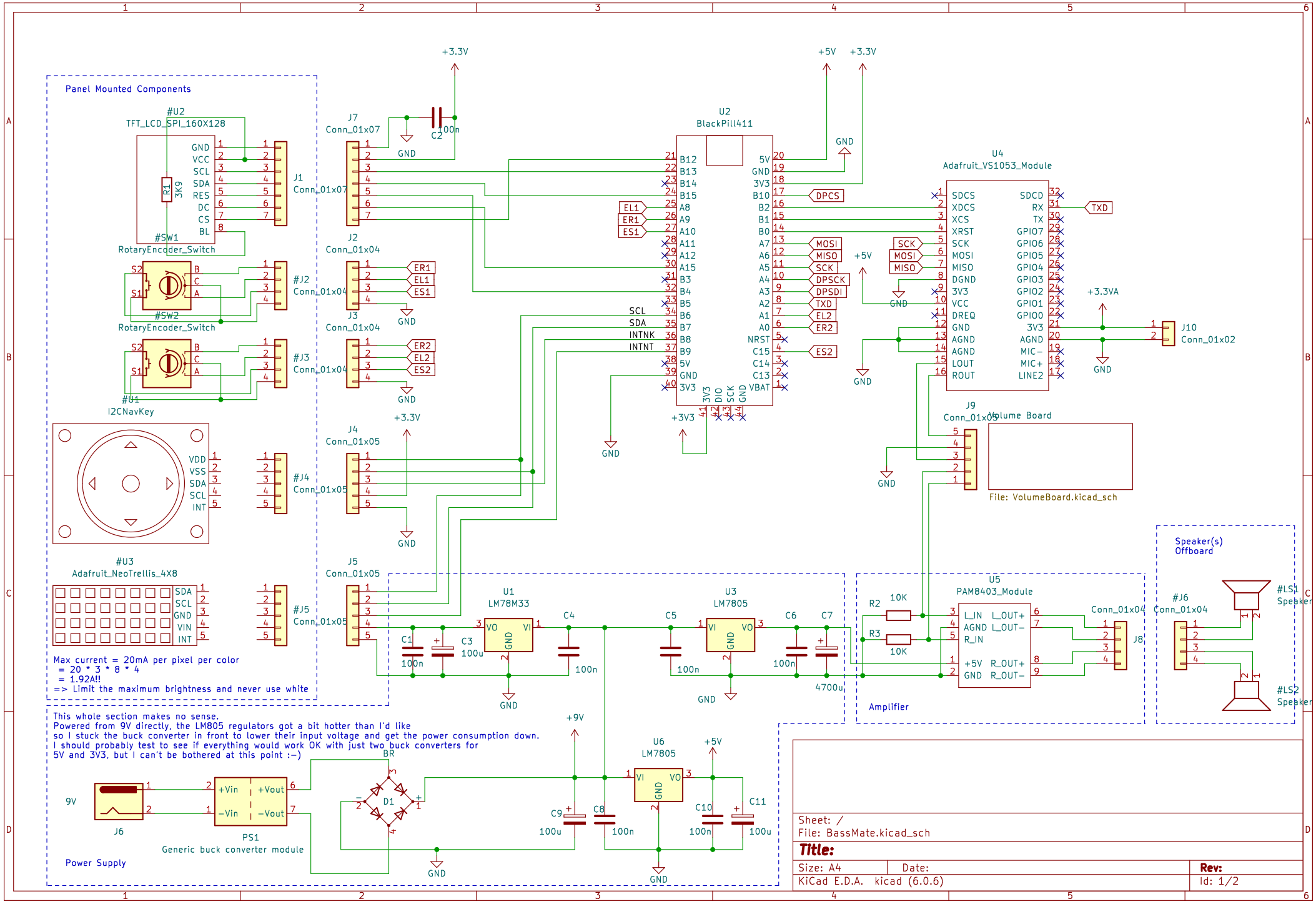
Panel Mounted Components
#U2
TFT_LCD_SPI_160X128
GND
VCC
SCL
SDA
RES
DC
CS
BL
R1
3K9
J1
Conn_01x07
#SW1
RotaryEncoder_Switch
#J2
Conn_01x04
#SW2
RotaryEncoder_Switch
#J3
Conn_01x04
#U1
I2CNavKey
VDD
VSS
SDA
SCL
INT
#J4
Conn_01x05
#U3
Adafruit_NeoTrellis_4X8
SDA
SCL
GND
VIN
INT
#J5
Conn_01x05
Max current = 20mA per pixel per color
= 20 * 3 * 8 * 4
= 1.92A!!
=> Limit the maximum brightness and never use white
J7
Conn_01x07
C2
100n
+3.3V
GND
J2
Conn_01x04
ER1
EL1
ES1
J3
Conn_01x04
ER2
EL2
ES2
J4
Conn_01x05
J5
Conn_01x05
U2
BlackPill411
B12
B13
B14
B15
A8
A9
A10
A11
A12
A15
B3
B4
B5
B6
B7
B8
B9
5V
GND
3V3
SCL
SDA
INTNK
INTNT
5V
GND
3V3
B10
B2
B1
B0
A7
A6
A5
A4
A3
A2
A1
A0
NRST
C15
C14
C13
VBAT
DPCS
MOSI
MISO
SCK
DPSCK
DPSDI
TXD
EL2
ER2
ES2
+5V
+3.3V
U4
Adafruit_VS1053_Module
SDCS
XDCS
XCS
XRST
SCK
MOSI
MISO
DGND
3V3
VCC
DREQ
GND
AGND
AGND
LOUT
ROUT
SDCD
RX
TX
GPIO7
GPIO6
GPIO5
GPIO4
GPIO3
GPIO2
GPIO1
GPIO0
3V3
AGND
MIC−
MIC+
LINE2
+3.3VA
J10
Conn_01x02
J9
Conn_01x05
Volume Board
File: VolumeBoard.kicad_sch
U1
LM78M33
VO
VI
GND
C1
100n
C3
100u
C4
100n
U3
LM7805
C5
100n
C6
100n
C7
4700u
U5
PAM8403_Module
R2
10K
R3
10K
L_IN
AGND
R_IN
+5V
GND
L_OUT+
L_OUT−
R_OUT+
R_OUT−
Conn_01x04
J8
Amplifier
Speaker(s)
Offboard
#J6
Conn_01x04
#LS1
Speaker
#LS2
Speaker
This whole section makes no sense.
Powered from 9V directly, the LM805 regulators got a bit hotter than I'd like
so I stuck the buck converter in front to lower their input voltage and get the power consumption down.
I should probably test to see if everything would work OK with just two buck converters for
5V and 3V3, but I can't be bothered at this point :−)
9V
J6
+Vin
−Vin
+Vout
−Vout
PS1
Generic buck converter module
BR
D1
+9V
C9
100u
C8
100n
U6
LM7805
C10
100n
C11
100u
Power Supply
Sheet: /
File: BassMate.kicad_sch
Title:
Size: A4
Date:
Rev:
KiCad E.D.A. kicad (6.0.6)
Id: 1/2

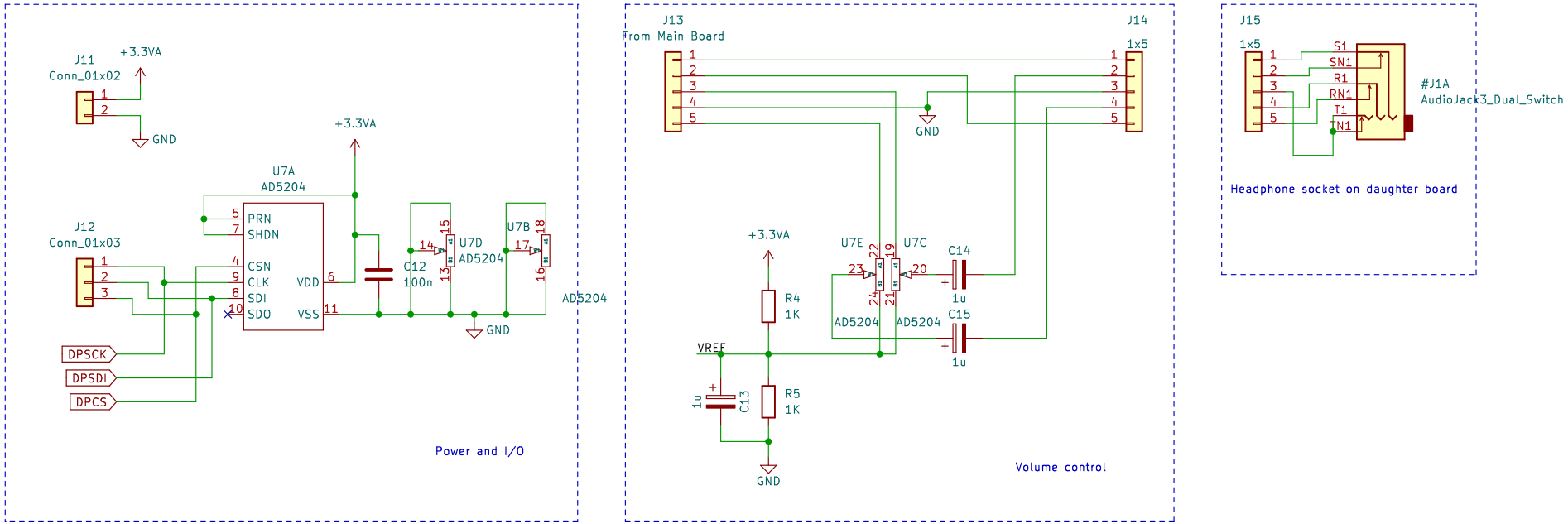

Sheet: /Volume Board/
File: VolumeBoard.kicad_sch

Title:

Size: A4	Date:	Rev:
KiCad E.D.A. kicad (6.0.6)		Id: 2/2