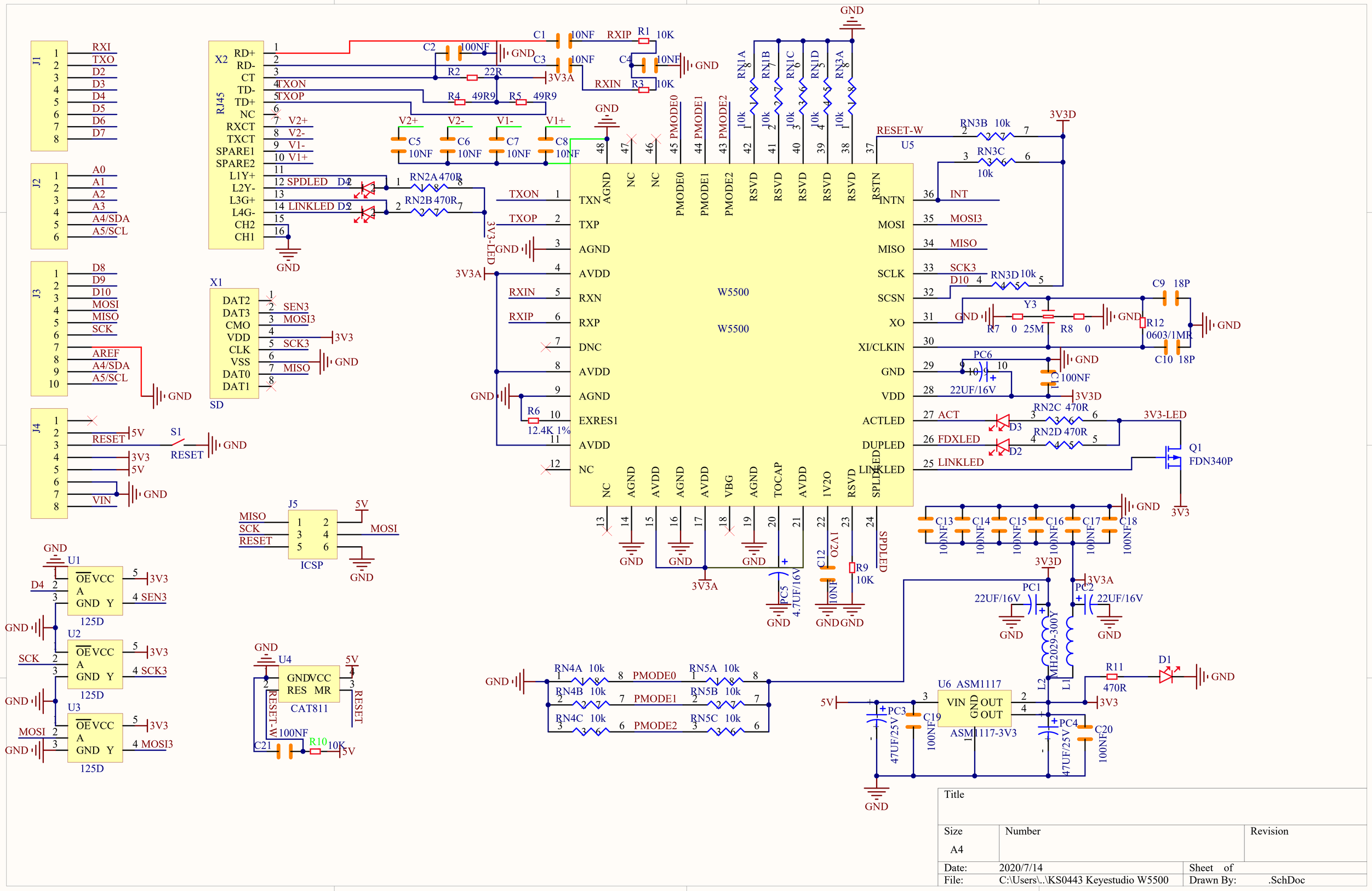

Title		
Size A4	Number	Revision
Date: 2020/7/14		Sheet of
File: C:\Users\..\KS0443 Keyestudio W5500		Drawn By: .SchDoc