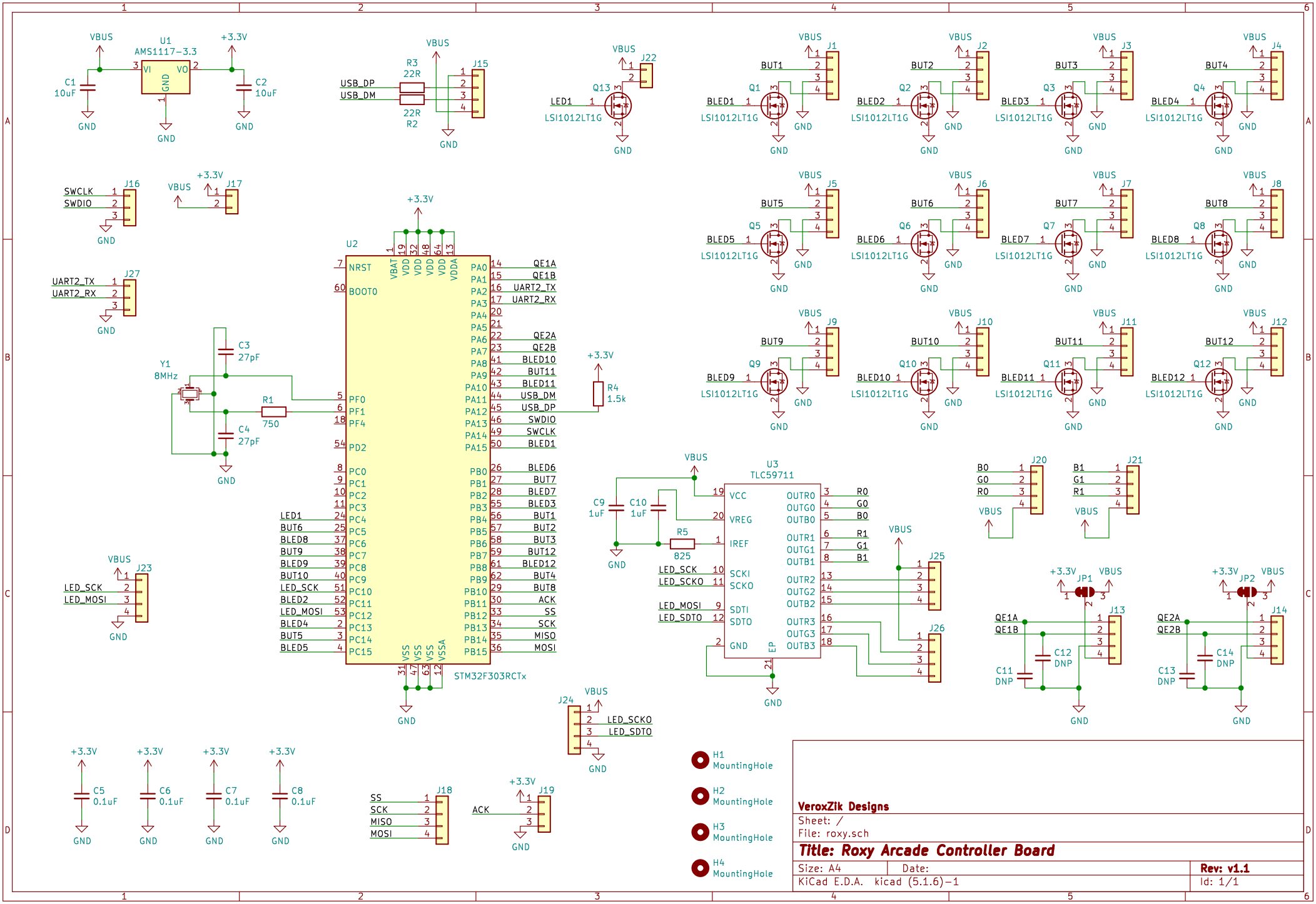
U1
AMS1117-3.3
VI
VO
GND
C1
10uF
C2
10uF
VBUS
+3.3V
R3
22R
R2
22R
USB_DP
USB_DM
J15
J22
Q13
LED1
LSI1012LT1G
J1
J2
J3
J4
J5
J6
J7
J8
J9
J10
J11
J12
BUT1
BUT2
BUT3
BUT4
BUT5
BUT6
BUT7
BUT8
BUT9
BUT10
BUT11
BUT12
BLED1
BLED2
BLED3
BLED4
BLED5
BLED6
BLED7
BLED8
BLED9
BLED10
BLED11
BLED12
Q1
Q2
Q3
Q4
Q5
Q6
Q7
Q8
Q9
Q10
Q11
Q12
J16
SWCLK
SWDIO
J17
J27
UART2_TX
UART2_RX
U2
STM32F303RCTx
NRST
BOOT0
VBAT
VDD
VDDA
VSS
VSSA
PA0
PA1
PA2
PA3
PA4
PA5
PA6
PA7
PA8
PA9
PA10
PA11
PA12
PA13
PA14
PA15
PB0
PB1
PB2
PB3
PB4
PB5
PB6
PB7
PB8
PB9
PB10
PB11
PB12
PB13
PB14
PB15
PF0
PF1
PF4
PD2
PC0
PC1
PC2
PC3
PC4
PC5
PC6
PC7
PC8
PC9
PC10
PC11
PC12
PC13
PC14
PC15
QE1A
QE1B
QE2A
QE2B
BLED10
BLED11
BLED1
BLED6
BLED7
BLED3
BLED12
BUT7
BUT8
BUT1
BUT2
BUT3
BUT12
BUT4
ACK
SS
SCK
MISO
MOSI
Y1
8MHz
C3
27pF
C4
27pF
R1
750
R4
1.5k
J23
LED_SCK
LED_MOSI
U3
TLC59711
VCC
VREG
IREF
SCKI
SCKO
SDTI
SDTO
GND
EP
OUTR0
OUTG0
OUTB0
OUTR1
OUTG1
OUTB1
OUTR2
OUTG2
OUTB2
OUTR3
OUTG3
OUTB3
R0
G0
B0
R1
G1
B1
C9
1uF
C10
1uF
R5
825
LED_SCKO
LED_SDTO
J24
J25
J26
J20
J21
JP1
JP2
J13
J14
QE1A
QE1B
QE2A
QE2B
C11
DNP
C12
DNP
C13
DNP
C14
DNP
C5
0.1uF
C6
0.1uF
C7
0.1uF
C8
0.1uF
J18
J19
H1
MountingHole
H2
MountingHole
H3
MountingHole
H4
MountingHole
VeroxZik Designs
Sheet: /
File: roxy.sch
Title: Roxy Arcade Controller Board
Size: A4
Date:
Rev: v1.1
KiCad E.D.A. kicad (5.1.6)-1
Id: 1/1